GENERAL STRUCTURAL NOTES

(STRUCTURAL DRAWINGS TAKE PRECEDENCE OVER SPECIFICATION IN CASE OF CONFLICTING INFORMATION. SPECIFICATIONS SHOULD BE REFERRED TO FOR ALL INFORMATION NOT PROVIDED ON STRUCTURAL DRAWINGS. STRUCTURAL DRAWINGS SHOULD NOT BE SCALED.)

1. GOVERNING BUILDING CODE:
   2018 NORTH CAROLINA STATE BUILDING CODE

2. DESIGN LOADS:

   DEAD LOADS:
   A. ROOF (WITHOUT MECHANICAL UNITS): .... 20 PSF
   B. ROOF (WITH MECHANICAL UNITS): .... 55 PSF

   FLOOR:
   A. WOOD RESIDENTIAL APARTMENTS (INCLUDING PARTITIONS): .... 30 PSF
   B. WOOD RESIDENTIAL CORRIDORS: .... 25 PSF
   C. WOOD RESIDENTIAL BALCONIES (WITH TOPPING): .... 40 PSF
   D. ELEVATOR HOIST BEAM (G.C. TO VERIFY WITH SUPPLIER): ....5000 LBS

   LIVE LOADS (PER GOVERNING CODE):
   ROOF (REDUCE BASED ON TRIBUTARY AREA PER GOVERNING CODE):...... 20 PSF

   ATTIC (NON-CONCURRENT AS PERMITTED BY GOVERNING CODE):
   A. UNINHABITABLE WITHOUT STORAGE (PER NCBC TABLE 1607.1) ..... 10 PSF
   B. UNINHABITABLE WITH STORAGE (PER NCBC TABLE 1607.1) .... 20 PSF
   C. HABITABLE ATTICS AND SLEEPING AREAS (PER NCBC TABLE 1607.1) 30 PSF

   FLOOR (REDUCE PER GOVERNING CODE):
   A. SLAB-ON-GRADE: .... 125 PSF
   B. RESIDENTIAL UNITS: .... 40 PSF
   C. BALCONIES: ....SAME AS OCCUPANCY SERVED OR MINIMUM OF 60 PSF
   D. CORRIDORS (UNREDUCABLE): .... 100 PSF
   E. PUBLIC AREAS (UNREDUCABLE): .... 100 PSF
   F. PARKING GARAGE: ....3000 LB OR 40 PSF

   ROOF SNOW LOADS (PER ASCE)*:
   A. GROUND SNOW LOAD (Pg): .... 15 PSF
   B. FLAT-ROOF SNOW LOAD (Pf): .... 10.5 PSF
   C. SNOW EXPOSURE FACTOR (Ce): 1.0
   D. SNOW IMPORTANCE FACTOR (I): 1.0
   E. ROOF THERMAL FACTOR (Ct): 1.0
   * ALL SNOW LOAD COMBINATIONS; SUCH AS UNBALANCED SNOW LOADS, DRIFT SNOW LOADS, SLIDING SNOW LOADS, ETC.; (PER ASCE 7) MUST BE INCLUDED IN TRUSS SUPPLIER'S DESIGN.

   STAIR LOADS (PER GOVERNING CODE):
   A. LIVE LOAD: .... 100 PSF
   B. CONCENTRATED LIVE LOAD: .... 300 LB MID-TREAD

   HANDRAILS AND GUARDRAILS LOADS (PER GOVERNING CODE):
   A. CONCENTRATED LOAD (APPLIED IN ANY DIRECTION AT ANY POINT AT TOP OF GUARDRAIL): .... 200 LBS
   B. UNIFORM LOAD (APPLIED IN ANY DIRECTION AT TOP OF GUARDRAIL) 50 PLF

   WIND LOADS (PER ASCE):
   A. ULTIMATE WIND SPEED (THREE SECOND GUST): .... 115 MPH
   B. RISK CATEGORY: II
   C. WIND EXPOSURE: .... B
   D. INTERNAL PRESSURE COEFFICIENT (GCpi): .... +/-0.18
   E. MWFRS DESIGN WIND PRESSURE (Qh): .... 25.1 PSF
   F. PROTECTION OF GLAZED OPENINGS SHALL BE PER ASCE 26.10.3
   G. COMPONENT AND CLADDING:

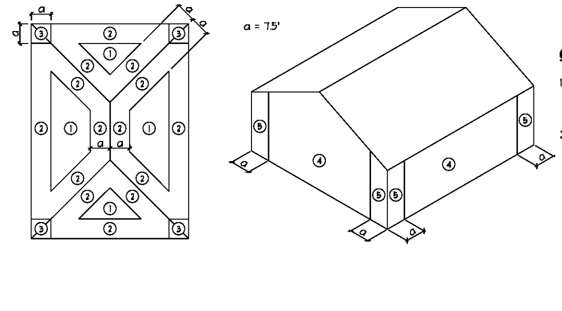

SEISMIC DESIGN DATA (PER GOVERNING CODE):
   A. SEISMIC IMPORTANCE FACTOR, I_E: 1.00
   B. RISK CATEGORY: II
   C. MAPPED SPECTRAL RESPONSE ACCELERATION, S_S: 0.152g
   D. MAPPED SPECTRAL RESPONSE ACCELERATION, S_1: 0.076g
   E. SITE CLASS: .... D
   F. SPECTRAL RESPONSE COEFFICIENT, S_{DS}: 0.163g
   G. SPECTRAL RESPONSE COEFFICIENT, S_{D1}: 0.122g
   H. SEISMIC DESIGN CATEGORY: .... B
   I. BASIC SEISMIC FORCE RESISTING SYSTEM:
      a. CONCRETE PODIUM SLAB: ....ORDINARY REINFORCED CONCRETE WALLS
      b. RESIDENTIAL CONSTRUCTION: ....LIGHT FRAME WALLS WITH SHEAR PANELS
   J. DESIGN BASE SHEAR:
      a. CONCRETE PODIUM SLAB:
         - BUILDING 2.......... ___ KIPS
         - BUILDING 4.......... ___ KIPS
      b. RESIDENTIAL CONSTRUCTION:
         - BUILDING 1.......... ___ KIPS
         - BUILDING 3.......... ___ KIPS
         - BUILDING 4.......... ___ KIPS
   K. SEISMIC RESPONSE COEFFICIENT, C_S:
      a. CONCRETE PODIUM SLAB: .... 0.___
      b. RESIDENTIAL CONSTRUCTION: .... 0.___
   L. RESPONSE MODIFICATION FACTOR, R:
      a. CONCRETE PODIUM SLAB: 4.0
      b. RESIDENTIAL CONSTRUCTION: .... ___
   M. ANALYSIS PROCEDURE USED: .... EQUIVALENT LATERAL FORCE

3. MATERIALS:
   CONCRETE (NORMAL WEIGHT - 28 DAY COMPRESSIVE STRENGTH):
   INTERIOR SLAB ON GRADE AND FOOTINGS: .... 3000 PSI (U.N.O. BELOW)
   EXTERIOR SLABS ON GRADE SHOWN ON STRUCTURAL ..... 3000 PSI (U.N.O. BELOW)
   DOCUMENTS AND SLABS IN UNHEATED SPACES: .... 4000 PSI
   LIGHTWEIGHT PEA GRAVEL TOPPING: .... 3000 PSI
   WALLS, COLUMNS AND PILASTERS: .... 5000 PSI
   ELEVATED POST-TENSION SLAB & COLUMNS: .... 5000 PSI
   REINFORCING: .... ASTM A615, GRADE 60
   REINFORCING TO BE WELDED: .... ASTM A706, GRADE 60
   WELDED WIRE FABRIC: .... ASTM A1064
   STRUCTURAL STEEL SHAPES: .... ASTM A992, Fy=50 KSI
   PLATES, ANGLES AND BARS: .... ASTM A36, Fy=36 KSI
   STRUCTURAL STEEL PIPE: .... ASTM A53, GRADE B, Fy=35 KSI
   STEEL TUBING (SQUARE/RECTANGLE HSS): ASTM A500, GRADE B, Fy=46 KSI
   STEEL TUBING (ROUND HSS): ....ASTM A500, GRADE B, Fy=42 KSI
   ANCHOR BOLTS: .... ASTM F1554
   A325 BOLTS: ....ASTM A563, HEX NUTS-GRADE C
   A490 BOLTS: .... GRADE DH
   GALVANIZED BOLTS: ....GRADE DH
   HIGH STRENGTH BOLTS: .... ASTM A325, TYPE I
   HARDENED STEEL WASHERS: ....ASTM F36, TYPE 1
   NAILS, SPIKES, AND STAPLES: .... ASTM F1667
   ELECTRODES FOR WELDING: .... AWS SERIES E70XX
   ANCHORS & POWDER ACTUATED FASTENERS: ...... HILTI OR APPROVED EQUAL
   VAPOR BARRIER: .... PER ARCHITECT
   GROUT:
      CMU: ....PER MASONRY NOTES
      ALL OTHER:.......... 5,000 PSI, NON-SHRINK

4. FIELD VERIFY ALL EXISTING ABOVE AND BELOW GROUND CONDITIONS PRIOR TO FABRICATION AND CONSTRUCTION.

5. THE STRUCTURAL DESIGN OF BUILDING IS BASED ON THE FULL INTERACTION OF ALL ITS COMPONENT PARTS, WITH NO PROVISION FOR CONDITION OCCURRING DURING CONSTRUCTION. THEREFORE, CONTRACTOR SHALL PROVIDE ADEQUATE BRACING DURING CONSTRUCTION.

6. OWNER SHALL RETAIN THE SERVICES OF A QUALIFIED INSPECTOR TO PROVIDE SPECIAL INSPECTIONS FOR ALL CONCRETE, MASONRY, REINFORCING STEEL, STRUCTURAL STEEL, COLD-FORMED (LIGHT GAGE) STEEL AND WOOD MATERIALS AS REQUIRED PER IBC CHAPTER 17.

7. NOTES, DETAILS, AND SCHEDULES HEREIN ARE TYPICAL AND MAY APPLY TO SIMILAR CONDITIONS UNLESS OTHERWISE NOTED OR SHOWN. NOT ALL SECTIONS, SCHEDULES, OR NOTES MAY APPLY TO THIS PROJECT. SHOP DRAWINGS SHALL DETAIL ALL CONDITIONS IN ACCORDANCE WITH SPECIFIED STANDARDS AND SPECIFIC REQUIREMENTS OF THIS PROJECT AS INDICATED ON THE DRAWINGS.

8. ALL HARDWARE, E.G., HANGERS, HOLDOWNS, HURRICANE TIES, SPECIFIED WITHIN THESE DRAWINGS TO BE INSTALLED PER MANUFACTURER'S REQUIREMENTS.

9. CONNECTION, DESIGN AND ANCHORAGE OF SECONDARY NON-STRUCTURAL COMPONENTS (INCLUDING, BUT NOT LIMITED TO; HVAC EQUIPMENT, ELECTRICAL EQUIPMENT, PLUMBING, CEILINGS, ELEVATORS, DOORS, CURTAIN WALL/WINDOW WALL (INCLUDING EXTERIOR WALLS NOT BEARING GRAVITY LOADS) SYSTEMS, SIGNS, TEMPORARY ELEMENTS, PRECAST...) SHALL BE THE RESPONSIBILITY OF THE SUPPLIER OR A SPECIALTY PROFESSIONAL ENGINEER CONSULTANT CONTRACTED THROUGH THE GENERAL CONTRACTOR OR SUPPLIER.

10. WHERE REFERENCE IS MADE TO TEST STANDARDS FOR MATERIALS OR PROCEDURES, SUCH STANDARDS SHALL BE THE LATEST EDITION AND/OR ADDENDA REQUIRED BY THE STATE WHERE THIS PROJECT IS LOCATED.

11. MINIMUM REQUIRED TURN-AROUND TIME FOR SHOP DRAWING APPROVAL BY STRUCTURAL ENGINEER IS TEN WORKING DAYS. SHOP DRAWINGS MUST BE APPROVED BY THE THE GENERAL CONTRACTOR AND THE ARCHITECT OF RECORD PRIOR TO REVIEW BY ENGINEER OF RECORD. PLEASE SCHEDULE ACCORDINGLY TO AVOID DELAYS. ONE SET OF THE FOLLOWING SHOP DRAWINGS SHALL BE SUBMITTED PRIOR TO CONSTRUCTION:
    CONCRETE MIX DESIGN
    CONCRETE REINFORCING
    STRUCTURAL STEEL, INCLUDING CANOPIES, WITH SEALED CALCULATIONS
    STAIRS AND RAILINGS WITH SEALED CALCULATIONS
    LUMBER AND ENGINEERED WOOD PRODUCTS
    PRE-ENGINEERED FLOOR AND ROOF TRUSSES WITH SEALED CALCULATIONS
    POST-TENSIONED STRAND LAYOUT AND DETAILS WITH SEALED CALCULATIONS (WITH DESIGN FOR LOSSES)
    WALL PANELS AND COMPONENTS
    PRECAST CONCRETE PLANS, DETAILS AND SEALED CALCULATIONS

    REFER TO PROJECT SPECIFICATIONS FOR ADDITIONAL REQUIREMENTS.

12. APPROVED RFI, CONTRACTOR'S SUGGESTION AND ANY OTHER CORRESPONDENCE BETWEEN SCG AND CONTRACTOR DOES NOT APPROVE ANY ADDITIONAL COST. THE OWNER OR OWNER'S REPRESENTATIVE MUST APPROVE ALL ADDITIONAL COSTS PRIOR TO INSTALLATION OF MATERIALS.

CONCRETE AND FOUNDATION NOTES

1. CONCRETE WORK SHALL CONFORM TO ALL REQUIREMENTS OF ACI 301 "SPECIFICATION FOR STRUCTURAL CONCRETE", EXCEPT AS MODIFIED BY THE REQUIREMENTS OF THESE CONTRACT DOCUMENTS.

2. THE FOLLOWING FOUNDATION DESIGN VALUES WERE USED BASED ON THE GEOTECHNICAL EXPLORATION REPORT BY TERRACON, INC DATED DECEMBER 30, 2011 (PROJECT NO. 70115119). THESE VALUES SHALL BE FIELD VERIFIED BY THE GEOTECHNICAL ENGINEER PRIOR TO POURING THE FOOTINGS.
   SAFE SOIL BEARING PRESSURE (WOOD CONSTRUCTION): .... 2000 PSF
   SAFE SOIL BEARING PRESSURE (PODIUMS AND GARAGE): .... ____PSF

   THE FOLLOWING VALUES WERE ASSUMED FOR BASEMENT, STEM AND RETAINING WALL DESIGN. THESE VALUES SHALL BE FIELD VERIFIED BY THE GEOTECHNICAL ENGINEER PRIOR TO POURING THE FOOTINGS.
   PASSIVE PRESSURE: .... ____PSF/FT
   ACTIVE PRESSURE: .... ___PCF
   AT REST PRESSURE: .... ___PCF
   COEFFICIENT OF FRICTION: .... ___

3. SUB GRADE AND UNDER SLAB DRAINAGE SYSTEM SHALL BE PREPARED PER GEOTECHNICAL ENGINEER'S REPORT.

4. SOIL BELOW INTERIOR CONCRETE SLABS ON GRADE AND ANY FILL WITHIN TEN FEET OF BUILDING LIMIT SHALL BE COMPACTED PER THE GEOTECHNICAL ENGINEER'S RECOMMENDATIONS FOR THIS PROJECT. ALL FOOTINGS SHALL BEAR ON ORIGINAL UNDISTURBED SOIL OR CONTROLLED FILL.

5. CONCRETE MIX DESIGNS SHALL BE ESTABLISHED BY THE SUPPLIER IN ACCORDANCE WITH ACI SPECIFICATIONS. MIX DESIGNS AND BACK-UP DATA SHALL BE SUBMITTED TO THE ENGINEER FOR APPROVAL PRIOR TO PLACEMENT OF CONCRETE.

6. ALL CONCRETE SHALL BE NORMAL WEIGHT (150 PCF), LIGHT WEIGHT (110 PCF) UNLESS NOTED OTHERWISE ON THE PLANS.

7. CONCRETE FOR FLOOR SLABS SHALL HAVE A MAXIMUM SLUMP OF 5 INCHES AT THE POINT OF DELIVERY.

8. AIR ENTRAINING AGENTS CONFORMING TO ASTM C260 SHALL BE ADDED TO ALL CONCRETE EXPOSED TO FREEZING AND THAWING TO PRODUCE 6-7% ENTRAINED AIR. AIR-ENTRAINING ADMIXTURES SHALL NOT BE ADDED TO CONCRETE USED FOR TROWEL-FINISHED INTERIOR SLABS-ON-GRADE OR INTERIOR ELEVATED SLABS.

9. SIZE OF AGGREGATES SHALL CONFORM TO ASTM C33.

10. NO CALCIUM CHLORIDE SHALL BE USED IN ANY CONCRETE.

11. CONTROL JOINTS (KEY-FORMED CONSTRUCTION JOINTS OR SAW-CUT CONTRACTION JOINTS), IF NOT SHOWN ON PLANS, SHALL BE SPACED WITHIN SLABS ON GRADE PER NOTE 12. SAW-CUT JOINTS SHALL BE 1/4 THE SLAB DEPTH (1" MINIMUM) AND SHALL BE INSTALLED WITHIN 24 HOURS OF SLAB PLACEMENT. CONTROL JOINTS SHALL BE PLACED BETWEEN ISOLATION JOINTS AT COLUMNS. CONTROL JOINTS SHALL NOT BE PLACED WITHIN ELEVATED SLABS. IT IS ADVISABLE TO NOT PLACE CONTROL JOINTS PARALLEL TO AND DIRECTLY ABOVE THICKENED SLABS. PROVIDE CONTROL JOINTS WITHIN POST-TENSIONED SLABS ON GRADE AS SPECIFIED BY POST-TENSION DESIGNER.

12. UNLESS NOTED OTHERWISE, ALL INTERIOR AND EXTERIOR SLABS ON GRADE SHOWN ON STRUCTURAL DRAWINGS, INCLUDING STEPS, SHALL BE 4" THICK, AND CONFORM TO LATEST EDITION OF ACI 360. SLABS ON GRADE TO BE REINFORCED WITH 6x6-W1.4xW1.4 WWF (SUPPORTED AT 1" FROM TOP OF SLAB. WWF SHALL LAP 2 CROSS WIRES PLUS 2" (MINIMUM) AT SPLICES. CONTROL JOINTS ARE TO DIVIDE THE SLAB SUCH THAT CONCRETE WITHIN JOINTS IS NOT GREATER THAN 12'-0" IN EITHER DIRECTION.

13. CONCRETE FINISH FLOORS SHALL HAVE A HARD STEEL TROWELED FINISH AND EXTERIOR SLABS, SIDEWALKS, PARKING, PADS AND RAMPS SHALL HAVE A LIGHT BROOM FINISH UNLESS NOTED OTHERWISE.

14. FLATNESS AND LEVELNESS TOLERANCES PER SPECIFICATIONS.

15. TEMPORARY EXCAVATION FOR FOOTINGS, PITS, PIPES OR OTHER PURPOSES SHALL BE SLOPED AND BRACED IN ACCORDANCE WITH O.S.H.A. REQUIREMENTS.

16. REINFORCING STEEL PLACEMENT SHALL BE INSPECTED BY A QUALIFIED INSPECTOR IN ACCORDANCE WITH ACI 318 SECTION 1.3.

17. PROVIDE BAR SUPPORTS AND SPACERS IN ACCORDANCE WITH ACI 315 "DETAILS AND DETAILING OF CONCRETE REINFORCING".

18. REFER TO SCHEDULE SHEETS FOR MINIMUM LAP SPLICE TABLES. SPLICES NOT SHOWN ON THE DRAWINGS SHALL BE SUBJECT TO APPROVAL.

19. WELDING OF REINFORCING STEEL SHALL NOT BE PERMITTED EXCEPT AS AUTHORIZED OR DIRECTED BY THE STRUCTURAL ENGINEER.

20. HORIZONTAL REINFORCEMENT IN FOOTINGS, TURNDOWN SLAB, CONCRETE BEAMS, AND WALLS SHALL BE CONTINUOUS AROUND CORNERS PER LAP SPLICE SCHEDULE.

21. ALL FIELD BENDING OF REINFORCING SHALL BE DONE COLD. HEATING OF BARS IS NOT PERMITTED.

22. PRINCIPAL OPENINGS ARE SHOWN ON STRUCTURAL DRAWINGS. REFER TO ARCHITECTURAL, MECHANICAL AND ELECTRICAL DRAWINGS FOR ADDITIONAL OPENINGS, EMBEDS, SLEEVES, DEPRESSIONS, SLOPES, ETC...

23. ALL OPENINGS IN CONCRETE WALLS LESS THAN 2'-0" WIDE SHALL BE REINFORCED WITH 2#5 BARS, ALL SIDES, EXTENDED A MINIMUM OF 3'-0" BEYOND OPENING, UNLESS NOTED OTHERWISE. CONTACT ENGINEER OF RECORD FOR OPENINGS LARGER THAN 2'-0" WIDE IF NOT DETAILED ON DRAWINGS.

24. PROVIDE A MINIMUM OF 2#4 BARS x 4'-0" LONG AT RE-ENTRANT CORNERS OF SLABS-ON-GRADE (AT MID-DEPTH OF SLAB AND OUTSIDE OF THICKENED SLAB) AND 3#5 x 8'-0" LONG AT ELEVATED SLABS, CENTERED ABOUT CORNER, UNLESS NOTED OTHERWISE ON PLANS.

25. ALL DEBRIS SHALL BE REMOVED FROM FORMS PRIOR TO PLACEMENT OF CONCRETE.

26. UNLESS NOTED OTHERWISE, VERTICAL CONTROL JOINTS IN STEP WALLS, BASEMENT WALLS AND RETAINING WALLS SHALL BE PLACED NOT MORE THAN 25'-0" APART AND SHALL BE 3/4" DEEP "V" CHAMFERED ON BOTH SIDES. 50% OF THE SPECIFIED HORIZONTAL REINFORCEMENT SHALL STOP 3" EACH SIDE OF THE CONTROL JOINT. CONSTRUCTION JOINTS SHALL BE LOCATED BY CONTRACTOR PER CONSTRUCTION SCHEDULE, AND AT ALL EXPANSION JOINTS. CONSTRUCTION JOINTS TO BE KEYED, AND ALL HORIZONTAL REINFORCEMENT SHALL BE DISCONTINUOUS AT CONSTRUCTION JOINT.

27. MINIMUM CONCRETE COVER FOR CAST-IN-PLACE CONCRETE REINFORCEMENT:

    CONCRETE CAST AGAINST & PERMANENTLY EXPOSED TO EARTH: .... 3 inches

    CONCRETE EXPOSED TO EARTH OR WEATHER:
    NO. 6 THROUGH NO. 18 BARS: .... 2 inches
    NO. 5 BAR AND SMALLER: .... 1-1/2 inches

    CONCRETE NOT EXPOSED TO WEATHER OR IN CONTACT WITH GROUND:
    SLABS, WALLS, JOISTS:
    NO. 11 BAR AND SMALLER: .... 3/4 inches
    BEAMS, COLUMNS:
    PRIMARY REINFORCEMENT, TIES, STIRRUPS: .... 1-1/2 inches

28. REFER TO GEOTECHNICAL ENGINEER'S REPORT FOR SUBGRADE PREPARATION, INCLUDING CRUSHED AGGREGATE BASE AND VAPOR BARRIER REQUIREMENTS AND RECOMMENDATIONS.

29. CONCRETE TEST REPORTS SHALL BE AVAILABLE AT JOB SITE.

30. 1/2" DIA. ANCHOR BOLTS FOR WALL SILL PLATES SHALL HAVE A MINIMUM EMBEDMENT OF 7" IN LIEU OF ANCHOR BOLTS, 1/2" DIA. SIMPSON ET EPOXY ANCHORS MAY BE USED IN NON-POST TENSION SLABS ONLY.

31. ALL FOUNDATION AND RETAINING WALLS SHALL BE BACKFILLED PER GEOTECHNICAL ENGINEERS RECOMMENDATIONS. HEAVY COMPACTION EQUIPMENT SHALL NOT BE USED TO COMPACT BACKFILL WITHIN 5 FEET LATERALLY BEHIND ANY WALL UNLESS THE WALL IS TEMPORARILY BRACED. THE DESIGN OF WALLS RETAINING EARTH ASSUMES DRAINAGE SYSTEM IS IN PLACE, AND DOES NOT INCLUDE HYDROSTATIC PRESSURE LOADS. THE GENERAL CONTRACTOR SHALL PROVIDE DRAINAGE SYSTEM IN ALL BACKFILL CONDITIONS (SEE CIVIL/ARCHITECTURAL DRAWINGS FOR DRAINAGE SPECIFICATIONS).

32. NO BACKFILL SHALL BE PLACED AGAINST CONCRETE WALLS UNTIL WALLS HAVE BEEN BRACED AGAINST LATERAL THRUST. SUCH BRACING SHALL REMAIN IN PLACE UNTIL SLAB AND FLOOR HAS BEEN PLACED AND CONCRETE HAS ATTAINED 28 DAY COMPRESSIVE DESIGN STRENGTH.

33. CONTRACTOR SHALL PROVIDE ALL NECESSARY SHORING AND BRACING FOR ALL STRUCTURAL ELEMENTS DURING CONSTRUCTION. SHORING MUST BE DESIGNED BY A STRUCTURAL ENGINEER THAT IS REGISTERED IN THE STATE THAT THIS PROJECT IS LOCATED. STRUCTURAL CONSULTING GROUP WILL NOT REVIEW SHORING SHOP DRAWINGS.

34. TOP REINFORCING BARS IN EXTERIOR CONCRETE SLABS ARE TO BE EPOXY COATED.

WOOD FRAMING NOTES

1. REFER TO TABLE 2304.10.1 FASTENING SCHEDULE OF THE 2012 NORTH CAROLINA STATE BUILDING CODE FOR MINIMUM FASTENING SCHEDULE FOR ALL FASTENERS NOT SPECIFIED ON CONSTRUCTION DOCUMENTS.

2. REFER TO STUD SCHEDULES FOR STUD SIZES, SPECIES AND SPACING. ALLOWABLE STRESSES AS FOLLOWS. ALL STRESSES MUST BE EXCEEDED FOR ALL PROPOSED SUBSTITUTIONS:

SPF STUD GRADE	Fb = 0675 psi MIN.	Fc = 0725 psi MIN.	E = 1200 ksi MIN.
SPF No.1/No.2	Fb = 0875 psi MIN.	Fc = 1150 psi MIN.	E = 1400 ksi MIN.
SYP No.2 (2x4)	Fb = 1100 psi MIN.	Fc = 1450 psi MIN.	E = 1400 ksi MIN.
SYP No.2 (2x6)	Fb = 1000 psi MIN.	Fc = 1400 psi MIN.	E = 1400 ksi MIN.

   ALL POSTS TO BE SYP No. 2 UNLESS NOTED OTHERWISE ON PLANS.

4x4	Fb = 1050 psi MIN.	Fc = 1100 psi MIN.	E = 1400 ksi MIN.
6x6	Fb = 850 psi MIN.	Fc = 525 psi MIN.	E = 1200 ksi MIN.

3. ALL HEADERS, BEAMS AND JOISTS SHALL BE No.2 SYP OR BETTER, SEE SCHEDULE FOR SIZES:

2x8	Fb = 925 psi MIN.	Fv = 175 psi MIN.	E = 1400 ksi MIN.
2x10	Fb = 800 psi MIN.	Fv = 175 psi MIN.	E = 1400 ksi MIN.
2x12	Fb = 750 psi MIN.	Fv = 175 psi MIN.	E = 1400 ksi MIN.

4. MINIMUM ALLOWABLE DESIGN STRESSES FOR TRUS-JOIST MACMILLAN, OR APPROVED EQUAL, LAMINATED VENEER LUMBER (LVL) BEAMS TO BE AS FOLLOWS:
   A. BENDING STRESS (Fb): .... 2600 psi
   B. COMPRESSION PARALLEL TO GRAIN (Fc): .... 2510 psi
   C. HORIZONTAL SHEAR (Fv): .... 285 psi
   D. COMPRESSION PERPENDICULAR TO GRAIN (Fc): .... 750 psi
   E. MODULUS OF ELASTICITY (E): .... 1900 ksi
   F. SHEAR MODULUS OF ELASTICITY (G): .... 118.75 ksi

4. MINIMUM ALLOWABLE DESIGN STRESSES FOR TRUS-JOIST MACMILLAN, OR APPROVED EQUAL, PARALLEL STRAND LUMBER (PSL) BEAMS TO BE AS FOLLOWS:
   A. BENDING STRESS (Fb): .... 2900 psi
   B. COMPRESSION PARALLEL TO GRAIN (Fc): .... 2900 psi
   C. HORIZONTAL SHEAR (Fv): .... 290 psi
   D. COMPRESSION PERPENDICULAR TO GRAIN (Fc): .... 750 psi
   E. MODULUS OF ELASTICITY (E): .... 2000 ksi
   F. SHEAR MODULUS OF ELASTICITY (G): .... 125 ksi

5. MINIMUM ALLOWABLE DESIGN STRESSES FOR TRUS-JOIST MACMILLAN, OR APPROVED EQUAL, PARALLEL STRAND LUMBER (PSL) COLUMNS TO BE AS FOLLOWS:
   A. BENDING STRESS (Fb): .... 2400 psi
   B. COMPRESSION PARALLEL TO GRAIN (Fc): .... 2500 psi
   C. HORIZONTAL SHEAR (Fv): .... 190 psi
   D. COMPRESSION PERPENDICULAR TO GRAIN (Fc): .... 425 psi
   E. MODULUS OF ELASTICITY (E): .... 1800 ksi
   F. SHEAR MODULUS OF ELASTICITY (G): .... 112.5 ksi

6. MINIMUM ALLOWABLE DESIGN STRESSES FOR TRUS-JOIST MACMILLAN, OR APPROVED EQUAL, LAMINATED STRAND LUMBER (LSL) TO BE AS FOLLOWS:
   A. BENDING STRESS (Fb): .... 1700 psi
   B. COMPRESSION PARALLEL TO GRAIN (Fc): .... 1400 psi
   C. HORIZONTAL SHEAR (Fv): .... 400 psi
   D. COMPRESSION PERPENDICULAR TO GRAIN (Fc): .... 680 psi
   E. MODULUS OF ELASTICITY (E): .... 1300 ksi
   F. SHEAR MODULUS OF ELASTICITY (G): .... 81.25 ksi

7. MINIMUM ALLOWABLE DESIGN STRESSES FOR GLU-LAM TO BE AS FOLLOWS:
   A. BENDING STRESS (Fb) .... 2400 psi
   B. HORIZONTAL SHEAR (Fv): .... 300 psi
   C. MODULUS OF ELASTICITY (E): .... 1800 ksi

8. ALL PLATES SHALL BE No. 2 SYP (UNLESS NOTED OTHERWISE ON STUD SCHEDULE). DOUBLE TOP PLATES TO BE LAPPED 48" MINIMUM AND NAILED TOGETHER WITH A MINIMUM OF FIVE (5) 16d NAILS PER FOOT.

9. ALL LUMBER IN CONTACT WITH CONCRETE OR MASONRY AND EXPOSED LUMBER SHALL BE PRESSURE-TREATED PER AWPA SPECIFICATIONS. EXPOSED ENGINEERED LUMBER BEAMS SHALL BE PRESSURE-TREATED PSL HAVING A MAXIMUM MOISTURE CONTENT OF 28% (SERVICE LEVEL 2).

10. ALL JAMB AND BEAM SUPPORT STUDS SHALL BE BLOCKED CONTINUOUSLY THROUGH FLOOR CAVITY WITH AN EQUAL NUMBER OF VERTICAL 2x4 STUDS. AT BEAMS ADD SUFFICIENT BLOCKS TO EACH END OF BEAM TO MATCH STUD GROUP ABOVE.

11. WOOD FRAMING CONNECTIONS TO BE MADE WITH THE FOLLOWING SIMPSON JOIST/BEAM HANGERS (OR APPROVED EQUAL) UNLESS NOTED OTHERWISE ON PLANS OR IN FRAMING NOTES.
    * BEAM HANGERS ARE ONLY TO BE USED AT BEAM TO BEAM CONNECTIONS. BEAMS ARE NOT TO BE HUNG FROM LEDGERS UNLESS SPECIFIED ON FRAMING PLANS.

2x8..........	LU28	(2) 2x8 + 1/2" PLYWOOD......	HU48 MAX.
2x10..........	U210	(2) 2x10 + 1/2" PLYWOOD.....	HU410 MAX.
2x12..........	HU212	(2) 2x12 + 1/2" PLYWOOD.....	HU412 MAX.
(2) 2x8........	LUS28-2	(3) 2x8 + 1/2" PLYWOOD......	HU68 MAX.
(2) 2x10......	HUS210-2 MAX.	(3) 2x10 + 1/2" PLYWOOD.....	HU610 MAX.
(2) 2x12......	HUS212-2 MAX.	(3) 2x12 + 1/2" PLYWOOD.....	HU612 MAX.

3 1/2" x 9 1/4" PSL..........	HB3.56/9.5
3 1/2" x 11 7/8" PSL..........	HGLTV3.511
3 1/2" x 14" PSL..........	HGLTV3.514
3 1/2" x 16" PSL..........	HGLTV3.516
3 1/2" x 18" PSL..........	HGLTV3.518
5 1/4" x 18" PSL..........	EGQ5.37-SDS H=18"
7" x 18" PSL..........	EGQ7.25-SDS H=18"

12. THE BUILDING IS TO BE ADEQUATELY BRACED BY CONTRACTOR UNTIL ENTIRE BUILDING IS FRAMED AND ALL SHEARWALL SHEATHING IS INSTALLED. PROVIDE 2x BLOCKING AT MID HEIGHT OF ALL BEARING WALLS MINIMUM OR 5'-0" o.c. MAXIMUM, U.N.O.

13. CUPOLAS AND CHIMNEYS SHALL HAVE A MINIMUM OF 3 STUDS AT EACH CORNER NAILED TO THE TOP AND BOTTOM CHORD OF ROOF TRUSS WITH (3)-16d NAILS EACH CHORD, EACH TRUSS. STRAP TO TOP CHORD WITH SIMPSON MTS30 TWIST STRAPS AT EACH CORNER.

14. REFER TO "HORIZONTAL AND UPLIFT LOAD SYSTEM" NOTES FOR ATTACHMENT OF SILL PLATES.

15. ALL EXTERIOR BALCONY AND BREEZEWAY WOOD FRAMING MEMBERS TO BE OF PRESSURE-TREATED LUMBER.

16. CONTINUOUS STUDS EACH SIDE OF HEADERS SHALL BE EQUAL TO 1/2 OF THE INTERRUPTED STUDS PLUS ONE STUD AT EACH SIDE, TWO STUDS MINIMUM EACH SIDE, UNLESS NOTED OTHERWISE.

17. CONNECTORS AND FASTENERS FOR PRESERVATIVE TREATED AND FIRE-RETARDANT- TREATED WOOD SHALL BE OF HOT-DIPPED ZINC-COATED GALVANIZED STEEL (G185), STAINLESS STEEL, SILICON BRONZE, OR COPPER INCLUDING BUT NOT LIMITED TO, ANCHOR BOLTS, POWDER ACTUATED FASTENERS, NAILS, SCREWS, BOLTS AND METAL FRAMING HARDWARE. THE ZINC COATING WEIGHTS SHALL COMPLY WITH ASTM A153. REFER TO NCSBC SECTION 2304.10.

18. ROOF SHEATHING TO RUN CONTINUOUS BELOW ALL DORMERS, CUPOLAS, CHIMNEYS, ET CETERA, UNLESS NOTED OTHERWISE.

19. REFER TO ARCHITECTURAL DRAWINGS FOR RATED WALL AND FLOOR REQUIREMENTS, INCLUDING FIRE RETARDANT TREATED LUMBER.

20. STUD SIZES ON THESE STRUCTURAL DOCUMENTS ARE MINIMUM SIZES REQUIRED STRUCTURALLY. REFER TO ARCHITECTURAL DRAWINGS FOR WALLS REQUIRING LARGER STUDS DUE TO PLUMBING, ET CETERA.

21. STEEL CONNECTORS CALLED OUT ON THESE DRAWINGS ARE THE DESIGN BASIS FOR THIS PROJECT. SUBSTITUTION REQUESTS FOR PRODUCTS OTHER THAN THOSE REFERENCED MUST BE SUBMITTED BY THE CONTRACTOR FOR REVIEW. SUBSTITUTIONS WILL ONLY BE CONSIDERED FOR PRODUCTS HAVING A CODE REPORT RECOGNIZING THE PRODUCT FOR THE APPROPRIATE APPLICATION. SUBSTITUTION REQUESTS SHALL INCLUDE DOCUMENTATION THAT DEMONSTRATES THE SUBSTITUTED PRODUCT IS CAPABLE OF ACHIEVING THE EQUIVALENT PERFORMANCE VALUES OF THE DESIGN BASIS PRODUCT.

22. WOOD STRUCTURAL PANELS SHALL COMPLY WITH PS1-95 AND PS2-04.

23. REFER TO 'HORIZONTAL AND UPLIFT LOAD SYSTEM NOTES' AND 'GRAVITY LOAD SUPPORT SYSTEM NOTES' ON OTHER SHEETS FOR ADDITIONAL REQUIREMENTS.

24. UNLESS INDICATED OTHERWISE, FRAMING IS NOT TO BE ATTACHED TO BRICK VENEER. ALL FRAMING IS TO PENETRATE BRICK VENEER AND BE ATTACHED TO MAIN BUILDING STRUCTURE. IN ADDITION, BRICK VENEER IS NOT TO BE SUPPORTED BY WOOD FRAMING, UNLESS SPECIFICALLY DETAILED ON STRUCTURAL CONSTRUCTION DOCUMENTS AS SUCH.

25. ONE 1" DIAMETER HOLE (2" MINIMUM FROM TOP AND BOTTOM, AND BEAM DEPTH AWAY FROM SUPPORTS) IS ALLOWED WITHIN EACH WOOD BEAM. MULTIPLE HOLES, OR LARGER HOLES, MUST BE SUBMITTED FOR REVIEW BY ENGINEER OF RECORD.

26. TOE-NAILS SHALL BE DRIVEN AT AN ANGLE OF 30 DEGREES TO THE PIECE AND BE STARTED AT 1/3 THE NAIL LENGTH FROM THE END OF THE PIECE.

27. ALL BOLTS SHALL BE FURNISHED WITH STANDARD NUT WASHERS, U.N.O.

28. WOOD BEAM LENGTHS TO BE CALCULATED TO PROVIDE FULL BEARING ON ENTIRE STUD PACK/POST/POST CAP AT ALL BEARING POINTS.

PRE-ENGINEERED WOOD TRUSS NOTES

1. TRUSSES TO BE SPACED @ 2'-0" o.c. TYPICAL UNLESS SHOWN OTHERWISE. DECREASED SPACING MAY BE USED IF REQUIRED BY TRUSS DESIGNER. SEE PLANS FOR TRUSS LOCATIONS AND SPANS.

2. TRUSSES TO BE DESIGNED AND FABRICATED BY TRUSS MANUFACTURER. DESIGN TO CARRY SEAL OF ENGINEER REGISTERED IN THE STATE THAT THE PROJECT IS LOCATED. ALL SNOW LOAD COMBINATIONS; SUCH AS UNBALANCED SNOW LOADS, DRIFT SNOW LOADS, SLIDING SNOW LOADS, ETC. (PER ASCE 7); MUST BE INCLUDED IN DESIGN BY TRUSS SUPPLIER. TRUSS MANUFACTURER TO PROVIDE ALL NECESSARY LOADS REQUIRED FOR THE DESIGN OF THE CONNECTIONS BETWEEN TRUSSES AND MAIN STRUCTURE.

3. CONFIGURATION AND SIZE OF WEB MEMBERS TO BE DETERMINED BY TRUSS MANUFACTURER. SIZES AND ORIENTATION SHOWN ON CONTRACT DOCUMENTS FOR SCHEMATIC PURPOSES ONLY.

4. SHOP DRAWINGS OF TRUSSES TO BE SUBMITTED FOR APPROVAL PRIOR TO FABRICATION.

5. MAXIMUM TOTAL LOAD DEFLECTION FOR ROOF TRUSSES TO BE SPAN/240 AND MAXIMUM LIVE LOAD ONLY DEFLECTION SHALL BE SPAN/360. MAXIMUM TOTAL LOAD DEFLECTION FOR FLOOR TRUSSES TO BE SPAN/360 AND MAXIMUM LIVE LOAD ONLY DEFLECTION SHALL BE SPAN/480.

6. TRUSS BRIDGING SHALL BE IN ACCORDANCE WITH MANUFACTURERS RECOMMENDATIONS.

7. THE FOLLOWING INFORMATION MUST ALSO BE SUPPLIED ON TRUSS SHOP DRAWINGS:
   A. SLOPE OR DEPTH, SPAN AND SPACING;
   B. LOCATION OF JOINTS;
   C. REQUIRED BEARING WIDTHS (SEE NOTE 24);
   D. DESIGN LOADS AS APPLICABLE;
   E. TOP CHORD LIVE LOAD (INCLUDING SNOW LOADS);
   F. TOP CHORD DEAD LOAD;
   G. BOTTOM CHORD LIVE LOAD;
   H. BOTTOM CHORD DEAD LOAD;
   I. CONCENTRATED LOADS AND THEIR POINTS OF APPLICATION AS APPLICABLE;
   J. CONTROLLING WIND AND EARTHQUAKE LOADS AS APPLICABLE;
   K. ADJUSTMENTS TO LUMBER AND METAL CONNECTOR PLATE DESIGN VALUE FOR CONDITIONS OF USE;
   L. EACH REACTION FORCE AND DIRECTION;
   M. METAL CONNECTOR PLATE TYPE, SIZE, THICKNESS OR GAGE, AND THE DIMENSIONED LOCATION OF EACH METAL CONNECTOR PLATE EXCEPT WHERE SYMMETRICALLY LOCATED RELATIVE TO THE JOINT INTERFACE;
   N. LUMBER SIZE, SPECIES AND GRADE FOR EACH MEMBER;
   O. CONNECTION REQUIREMENTS FOR:
      O.1. TRUSS TO TRUSS;
      O.2. TRUSS PLY TO PLY; AND
      O.3. FIELD SPLICES.
   P. CALCULATED DEFLECTION RATIO AND MAXIMUM VERTICAL AND HORIZONTAL DEFLECTION FOR LIVE AND TOTAL LOAD AS APPLICABLE;
   Q. MAXIMUM AXIAL TENSILE AND COMPRESSION FORCES IN THE TRUSS MEMBERS;
   R. REQUIRED PERMANENT INDIVIDUAL TRUSS MEMBER BRACING; AND
   S. EACH INDIVIDUAL TRUSS DESIGN DRAWING SHALL BEAR THE SEAL AND SIGNATURE OF THE TRUSS DESIGNER.

8. TRUSS MANUFACTURER TO PROVIDE END WALL TRUSSES AT EACH SIDE OF VAULTED CEILINGS, AT GABLE ENDS, AT BUILDING STEP DOWNS AND AT CHANGE OF ROOF LINES.

9. TRUSS PLANS SHALL BE AVAILABLE ON JOB SITE DURING THE TIMES OF INSPECTION. THESE DRAWINGS SHALL BEAR CLEAR INDICATION THAT THEY HAVE BEEN REVIEWED AND APPROVED BY THE STRUCTURAL ENGINEER OF RECORD.

10. ROOF TRUSS LAYOUTS MUST BE FOLLOWED DIRECTLY UNLESS ENGINEER OF RECORD APPROVES CHANGES PRIOR TO SHOP DRAWING SUBMITTAL. ALL LOADS GENERATED FROM THESE LAYOUTS ARE TRACKED DOWN TO FOUNDATION. CHANGES TO THE LAYOUT THAT ARE MORE EFFICIENT IN REGARD TO ROOF TRUSSES ARE NOT NECESSARILY MORE EFFICIENT TO THE PROJECTS AS A WHOLE. ANY SHOP DRAWING LAYOUTS WITH UNAPPROVED CHANGES WILL BE REJECTED, WHICH MAY DELAY TRUSS DELIVERY.

11. PRE-ENGINEERED WOOD TRUSSES SHALL BE BRACED IN ACCORDANCE WITH TRUSS PLATE INSTITUTE'S HANDLING, INSTALLING AND BRACING METAL PLATE CONNECTED WOOD TRUSSES SUMMARY SHEET. TRUSS SUPPLIER SHALL CLEARLY INDICATE BRACING LOCATIONS ON SHOP AND ERECTION DRAWINGS.

12. TRUSS SUPPLIER SHALL PROVIDE A FLOOR TRUSS ON TOP OF PARALLEL UNIT SEPARATION AND BREEZEWAY WALLS AT ALL ELEVATED FLOORS OF ALL BUILDINGS, UNLESS NOTED OTHERWISE. UNIT SEPARATION WALLS TO HAVE 3/4" SOLID SHEATHING SHEAR PANELS WITHIN FLOOR CAVITY PER FLOOR FRAMING DETAILS. TRUSS SUPPLIER SHALL PROVIDE SHEAR BLOCKS BETWEEN TRUSSES AT PERPENDICULAR SHEARWALL CONDITIONS.

13. ROOF TRUSSES MUST BE DESIGNED TO TRANSFER 75 PLF OF SHEAR FORCE TO EACH PARALLEL SHEARWALL BELOW. ATTACH TO WALL BELOW WITH A34 CLIPS AT 24" o.c.

14. WHERE ROOF TRUSSES ARE DISCONTINUOUS AT INTERIOR BEARING WALLS CONNECT TRUSSES AT TOP, MID-HEIGHT AND BOTTOM WITH (3) 16d NAILS AT EACH LOCATION. PROVIDE 2x8 SCABS AS REQUIRED.

15. TRUSS DESIGN LOADS TO BE AS FOLLOWS:
    TRUSSES SHALL BE DESIGNED FOR ALL APPLICABLE LOADS AND LOAD CASES. REFER TO NOTE 2 OF 'GENERAL STRUCTURAL NOTES' FOR LIVE LOADS.

    DEAD LOAD INCLUDES ONE LAYER OF 5/8" GYPSUM BOARD CEILING (ADD 3 PSF FOR EACH ADDITIONAL LAYER - REFER TO ARCH DRAWINGS FOR LOCATIONS). ALL TRUSSES SUPPORTING NON-BEARING WALLS THAT DO NOT STACK DOWN TO FOUNDATION TO BE DESIGNED FOR 15 PSF PARTITION LOAD FOR EACH FLOOR ABOVE. TRUSS ENGINEER HAS THE OPTION TO CALCULATE ACTUAL PARTITION LOADS, IN LIEU OF USING 15 PSF/FLOOR) FOR DESIGN OF TRUSSES.

16. FINAL THRU-FLOOR CONNECTIONS AND CONNECTIONS TO FOUNDATION/POST- TENSIONED SLAB WILL BE PROVIDED WHEN ROOF TRUSS SHOP DRAWINGS SHOWING ALL UPLIFT LOADS ARE SUBMITTED TO THE STRUCTURAL ENGINEER OF RECORD BY TRUSS SUPPLIER.

17. ALL WOOD TRUSSES SHALL BE DESIGNED AND FABRICATED TO COMPLY WITH THE LATEST EDITIONS OR THE NATIONAL DESIGN SPECIFICATIONS FOR STRESS-GRADE LUMBER AND ITS FASTENERS, TIMBER CONSTRUCTION STANDARDS (A.I.T.C), AND THE BUILDING CODE.

18. ALL LUMBER SHALL CONFORM TO THE SPECIES AND RECOGNIZED NOMINAL SIZES SHOWN ON THE TRUSS ENGINEERING DRAWINGS.

19. ALL TRUSS CONNECTOR PLATES SHALL BE MANUFACTURED FROM ASTM A446-72 GRADE A GALVANIZED STEEL OF NO LESS THAN 20 GAGE THICKNESS WITH A MINIMUM YIELD OF 33,000 psi AND AN ULTIMATE TENSILE STRENGTH OF 45,000 psi.

20. TRUSSES ARE TO BE STORED OFF THE GROUND IN A MANNER WHICH WILL NOT DAMAGE OR WARP THE TRUSSES PRIOR TO ERECTION.

21. FIELD REPAIR OF DAMAGED TRUSSES MUST BE APPROVED IN WRITING BY THE ENGINEER OF RECORD.

22. ALL ROOF TRUSSES ARE TO HAVE METAL STRAPS AT EACH END TO RESIST UPLIFT FORCES. STRAPS ARE TO BE ATTACHED IN ACCORDANCE WITH MANUFACTURER'S SPECIFICATIONS. CONTRACTOR TO VERIFY THAT THE ROOF CLIPS SPECIFIED ON THE STRUCTURAL DRAWINGS WILL RESIST FORCES CALLED OUT ON THE TRUSS SHOP DRAWINGS AND PROVIDE ADDITIONAL CLIPS IF REQUIRED.

23. TRUSS SUPPLIER IS TO SUPPLY PLAN SHOWING LOCATION AND REQUIREMENTS FOR ANY TEMPORARY BRACING REQUIRED FOR, OR DURING, ERECTION.

24. TRUSS SUPPLIER TO CONSIDER TOP PLATE CRUSHING (2x SYP #2 PLATES) IN DESIGN OF TRUSSES. ADDITIONAL GIRDER PLIES OR CLOSER TRUSS SPACING MAY BE REQUIRED.

25. TRUSS DESIGNER TO SPECIFY TRUSS HANGERS AS REQUIRED TO SUPPORT TRUSSES. ALL HARDWARE REQUIRED FOR CONNECTIONS BETWEEN TRUSSES SHALL BE DESIGNED AND SPECIFIED BY THE REGISTERED TRUSS DESIGN ENGINEER OF RECORD. ALL TRUSS CONNECTORS TO BE G90 GALVANIZED STEEL. ALL NAILS/SCREWS USED AT CONNECTOR PLATES/ANCHORS SHALL BE G90 GALVANIZED.

26. GENERAL CONTRACTOR SHALL INSTALL TEMPORARY BRACING TO HOLD THE TRUSSES TRUE AND PLUMB AND IN SAFE CONDITION UNTIL PERMANENT TRUSS BRACING AND BRIDGING CAN BE SOLIDLY NAILED IN PLACE TO FORM A STRUCTURALLY SOUND FRAMING SYSTEM. REFER TO SBCA/TPI BCSI-B1 "GUIDE FOR HANDLING, INSTALLING, RESTRAINT AND BRACING OF TRUSSES", BCSI-B7 " GUIDE FOR HANDLING, INSTALLING & BRACING OF 3x2 & 4x2 PARALLEL CHORD TRUSSES" AND ADDITIONAL BRACING DETAILS PROVIDED BY THE TRUSS MANUFACTURER. TEMPORARY BRACING FOR TRUSSES WITH CLEAR SPANS OF 60 FEET OR GREATER IN LENGTH SHALL BE DESIGNED BY A PROFESSIONAL ENGINEER LICENSED IN THE STATE WHERE CONSTRUCTION IS TO OCCUR.

27. GENERAL CONTRACTOR SHALL BE RESPONSIBLE FOR INSTALLING PERMANENT INDIVIDUAL TRUSS RESTRAINT BRACING AT ALL LOCATIONS SHOWN ON THE TRUSS DRAWINGS. REFER TO SBCA/TPI BCSI-B3 "PERMANENT RESTRAINT/BRACING OF CHORDS & WEB MEMBERS" AND ADDITIONAL BRACING DETAILS PROVIDED BY THE TRUSS MANUFACTURER. PERMANENT BRACING FOR TRUSSES WITH CLEAR SPANS OF 60 FEET OR GREATER IN LENGTH SHALL BE DESIGNED BY A PROFESSIONAL ENGINEER HIRED BY THE GENERAL CONTRACTOR AND LICENSED IN THE STATE WHERE CONSTRUCTION IS TO OCCUR. ALL PERMANENT BRACING SHALL BE INSTALLED AND ALL COMPONENTS PERMANENTLY FASTENED BEFORE THE APPLICATION OF ANY LOADS TO THE TRUSSES.

28. CONCENTRATED LOADS SHALL BE SUPPORTED AT PANEL POINTS ONLY. ANY LOADS SUSPENDED FROM TRUSSES MUST BE APPLIED TO EACH TRUSS UNIFORMLY, SPACING OF HANGERS NOT TO EXCEED 2'-0" o.c. IN ANY DIRECTION.

29. FLOOR TRUSS WEB STIFFENERS ARE REQUIRED AT ALL INTERMEDIATE BEARING LOCATIONS AND WHEN TRUSSES ARE BEING SUPPORTED WITH HANGERS.

30. GIRDER TRUSSES ARE NOT TO BE HUNG FROM LEDGERS UNLESS DIRECTLY SPECIFIED ON FRAMING PLANS. LEDGERS ARE TO BE INTERRUPTED BY THE GIRDER TRUSS IN ORDER FOR THE GIRDER TRUSS TO BEAR DIRECTLY ON THE WALL.

WOOD SHRINKAGE NOTES

1. WOOD SHRINKAGE IS A VARIABLE PROPERTY AND CAN BE AFFECTED BY SEVERAL UNKNOWN FACTORS INCLUDING BUT NOT LIMITED TO THE ORIENTATION OF THE ANNULAR RINGS TO EACH INDIVIDUAL PIECE OF LUMBER, THE TIME OF TRANSIT TO THE JOB SITE, THE LENGHT OF THE EXPOSURE DURING CONSTRUCTION, AND THE GEOGRAPHICAL LOCATION OF THE JOB SITE. THESE CALCULATIONS ARE BASED ON AVERAGE AND ACCEPTED INDUSTRY STANDARDS.

2. WOOD USED FOR THE DESIGN OF THE PROJECT HAS BEEN ASSUMED TO HAVE A MAXIMUM MOISTURE CONTENT OF 19 PERCENT. THE MOISTURE DESIGNATION ON THE GRADE STAMP OF THE WOOD SHALL BE SURFACE (S-DRY) OR KILN DRY (KD).

3. THE ASSUMED INITIAL IN-SERVICE MOISTURE CONTENT OF ALL STAMPED S-DRY OR KD 2X MATERIAL SHALL BE 19 PERCENT.

4. THE ASSUMED FINAL IN-SERVICE MOISTURE CONTENT USED FOR SHRINKAGE CALCULATIONS IS 8 PERCENT.

5. THE SHRINKAGE VALUE OF WOOD IN ITS WIDTH AND THICKNESS IS TAKEN AS 0.002 IN/IN PER 1 PERCENT CHANGE IN MOISTURE CONTENT. THE LONGITUDINAL SHRINKAGE OF A PIECE OF 2X LUMBER IS TAKEN AS 0.00005 IN/IN PER 1 PERCENT CHANGE IN MOISTURE CONTENT.

6. THE DEFORMATION OF WOOD PERPENDICULAR TO THE GRAIN IS NOT CONSIDERED IN THE CALCULATIONS AS THIS DETERMINES THE WOOD SHRINKAGE DUE TO THE LOSS OF MOISTURE CONTENT ONLY.

7. THE PER FLOOR SHRINKAGE CALCULATED BETWEEN BOTTOM OF SILL PLATE AND TOP OF THE BEARING PLATE IS 0.178 INCHES. THE SHRINKAGE AT EACH FLOOR CAVITY IS CALCULATED TO BE 0.0759 INCHES.

8. THE CUMULATIVE SHRINKAGE AT EACH LEVEL IS AS FOLLOWS:

ROOF BEARING	1.02 INCHES
FOURTH FLOOR DECK	0.76 INCHES
THIRD FLOOR DECK	0.51 INCHES
SECOND FLOOR DECK	0.25 INCHES

9. DESIGNERS AND CONTRACTORS FOR SYSTEMS AFFECTED BY WOOD SHRINKAGE, INCLUDING BUT NOT LIMITED TO, MEP, FACADES, WATERPROOFING, GLAZING, FIREWALL CORES, AND DRAINAGE, SHALL BE RESPONSIBLE FOR ACCOUNTING FOR ANTICIPATED SHRINKAGE IN THEIR DESIGN/WORK.

Structural Consulting Group, LLC
6250 shiloh road · suite 20 · alpharetta, ga 30005
phone (678) 513-4242 fax (678) 513-4232
SCG Project No. 191003
N.C. C.O.A.: P-0573

WLA
WATTS LEAF ARCHITECTS, PA
101 North McDowell Street Suite 112
Charlotte, North Carolina 28204
PH 704 376 1200 FX 704 376 5111

CRABTREE NORTH APTS.
2251 Charles Drive
Raleigh, North Carolina
EYC COMPANIES

03FEB20
PRICING
SET

PROJECT	1915
DATE	06NOV19
DRAWN BY	SCG
CHECKED BY	FSO

GENERAL NOTES

S1.0.0

Order Plans @ www.LDHLine.com