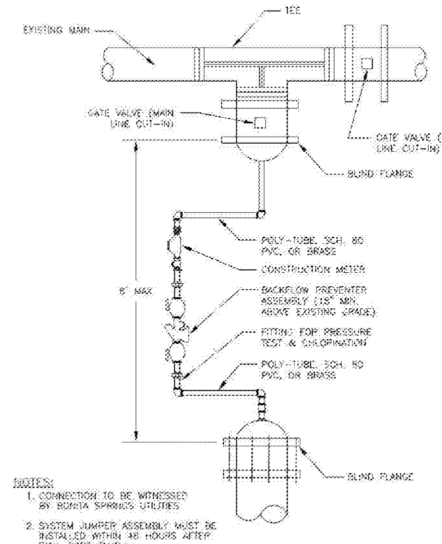

NOTES:
1. CONNECTION TO BE WITNESSED BY BONITA SPRINGS UTILITIES
2. SYSTEM JUMPER ASSEMBLY MUST BE INSTALLED WITHIN 48 HOURS AFTER FULL BORE FLUSH

CONSTRUCTION JUMPER ASSEMBLY
W-1

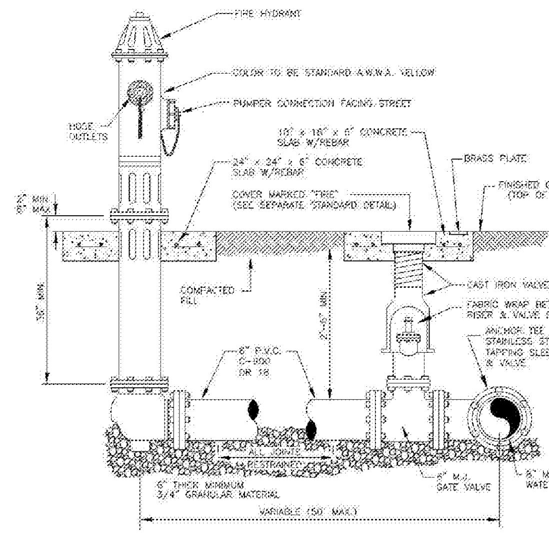

FIRE HYDRANT ASSEMBLY
W-2

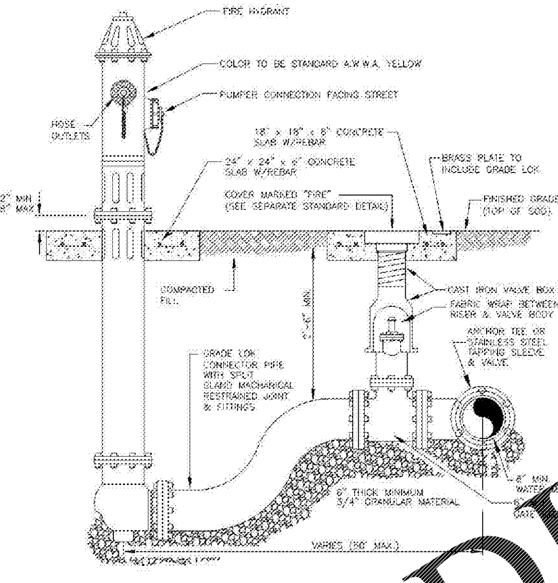

FIRE HYDRANT ASSEMBLY WITH GRADE-LOK ADAPTOR
W-3

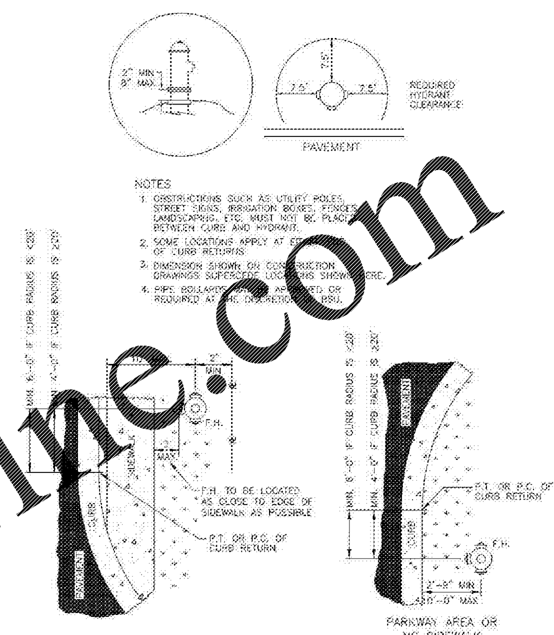

NOTES
1. OBSTRUCTIONS SUCH AS UTILITY POLES, STREET SIGNS, IRRIGATION BOXES, FENCES, LANDSCAPING, ETC. MUST NOT BE PLACED BETWEEN CURB AND HYDRANT.
2. SOME LOCATIONS APPLY AT EDGE OF CURB RETURNS.
3. DIMENSION SHOWN ON CONSTRUCTION DRAWINGS SUPERCEDE LOCATIONS SHOWN HERE.
4. PIPE BOLLARDS MAY BE APPROVED OR REQUIRED AT THE DISCRETION OF BSU.

FIRE HYDRANT LOCATIONS/CLEARANCE
W-4

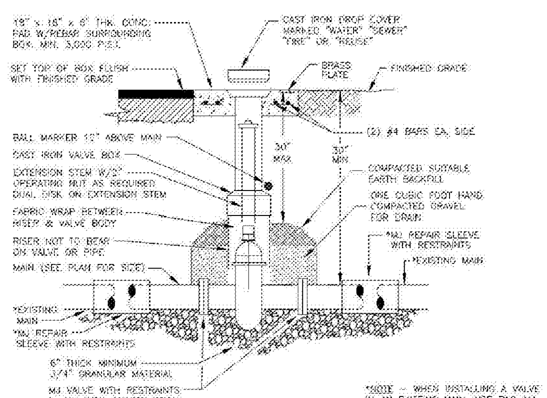

*NOTE – WHEN INSTALLING A VALVE IN AN EXISTING MAIN, USE TWO MJ REPAIR SLEEVES ONE AT EACH END OF THE CUT.

VALVE INSTALLATION
W-9

NOTE: TEMPORARY BLOW-OFF TO REMAIN IN PLACE UNTIL DISTRIBUTION SYSTEM HAS BEEN FLUSHED. AFTER CLEARANCE IS OBTAINED REFER TO PERMANENT BLOW-OFF DETAIL FOR FINAL BLOW-OFF CONFIGURATION

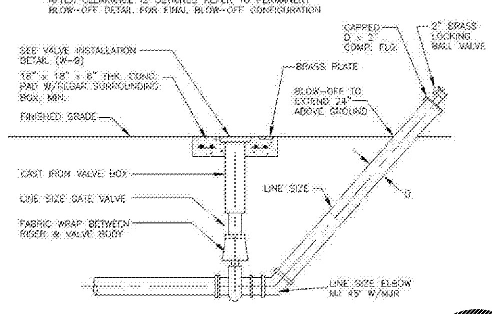

NOTES:
1. VALVE BOX RISER SHALL NOT BEAR ON VALVE OR PIPE
2. SEE VALVE INSTALLATION DETAIL FOR VALVE SUPPORT

TEMPORARY BLOW-OFF ASSEMBLY DETAIL
W-6

NOTE: CONFIGURATION SHOWN TO BE IN PLACE FOR PRESSURE TESTING & BACTERIAL CLEARANCES.

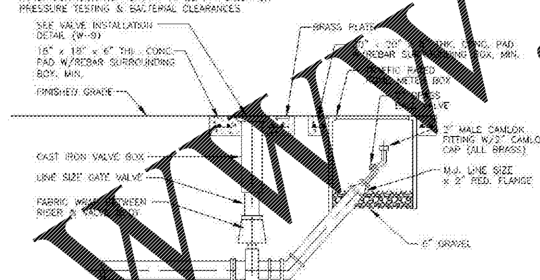

NOTES:
1. VALVE BOX RISER SHALL NOT BEAR ON VALVE OR PIPE
2. SEE VALVE INSTALLATION DETAIL FOR VALVE SUPPORT

PERMANENT BLOW-OFF ASSEMBLY DETAIL
W-5

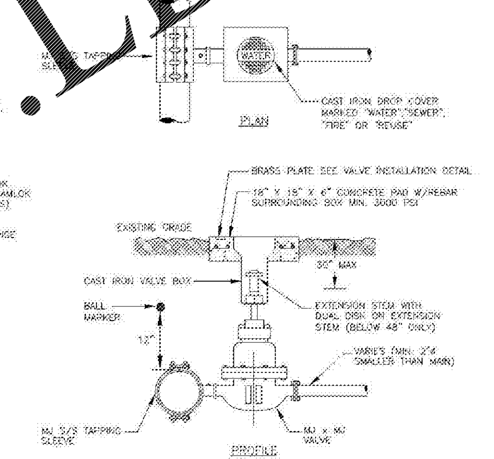

NOTES:
1. SEE VALVE INSTALLATION DETAIL FOR VALVE SUPPORT
2. REQUIRES WRITTEN BSU APPROVAL

TAPPING SLEEVE AND VALVE
W-11

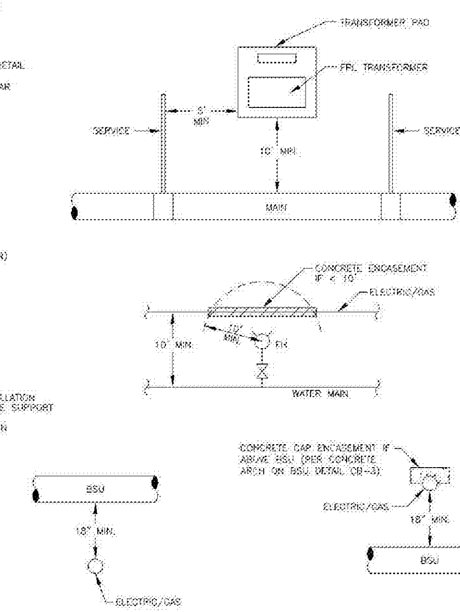

ELECTRICAL / GAS CLEARANCE
W-15

NOTES:
1. LOCATOR TAPE TO BE WRAPPED AROUND 2" POLY-TUBE FROM VALVE TO COMPRESSION FITTING
2. LOCATOR TAPE IS TO BE LAID 12" ABOVE 2" POLY-TUBE
3. POLY-TUBE WILL BE TIED TO 2x4 WITH NYLON TIES.

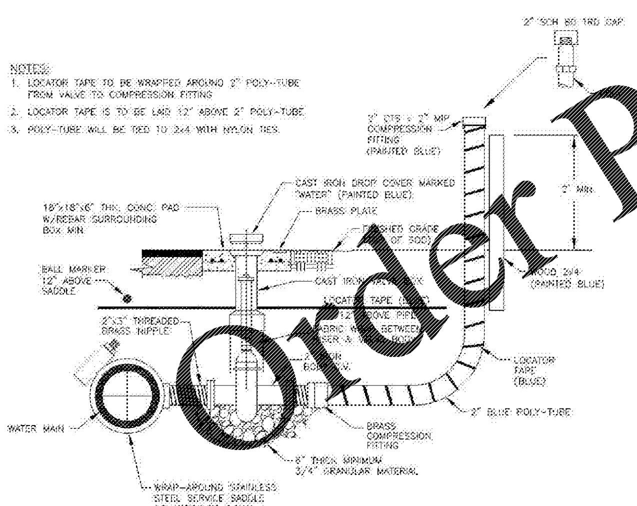

2" POTABLE WATER SERVICE
W-12

NOTES:
1. LOCATOR TAPE TO BE WRAPPED AROUND 1" POLY-TUBE FROM VALVE TO COMPRESSION FITTING
2. LOCATOR TAPE IS TO BE LAID 12" ABOVE 1" POLY-TUBE
3. POLY-TUBE WILL BE TIED TO 2x4 WITH NYLON TIES.

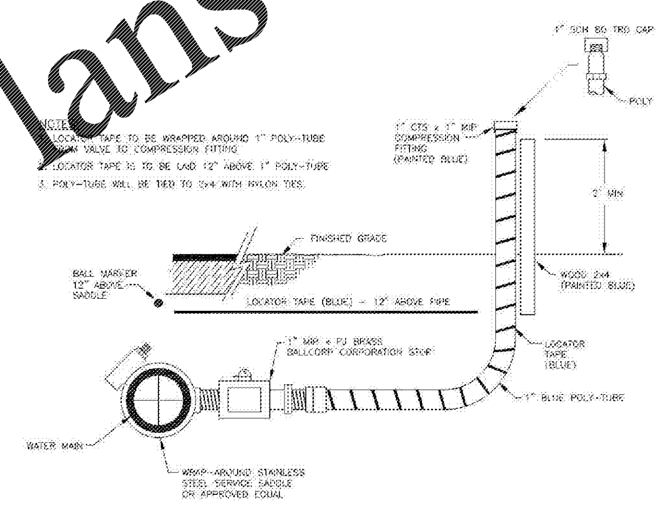

1" POTABLE WATER SERVICE
W-13

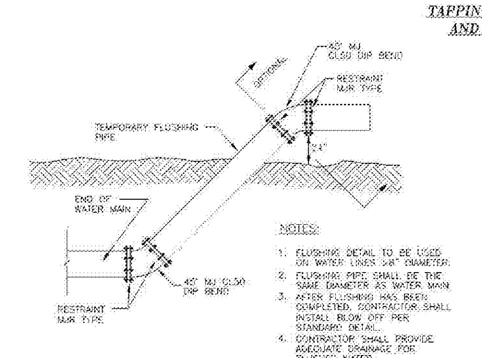

NOTES:
1. FLUSHING DETAIL TO BE USED ON WATER LINES 3/8" DIAMETER.
2. FLUSHING PIPE SHALL BE THE SAME DIAMETER AS WATER MAIN
3. AFTER FLUSHING HAS BEEN COMPLETED, CONTRACTOR SHALL INSTALL BLOW OFF PER STANDARD DETAIL.
4. CONTRACTOR SHALL PROVIDE ADEQUATE DRAINAGE FOR FLUSHED WATER

WATER MAIN FLUSHING DETAIL
W-8

CONSULTANTS COMMENTS:

B.S.U. DETAIL SHEETS MUST REMAIN AS IS (NO ALTERATIONS)
IF ADDITIONAL DETAILS ARE REQUIRED SUBMIT ON SEPERATE SHEET

DETAIL W-7 DELETED
DETAIL W-10 DELETED
DETAIL W-14 DELETED

CLIENT:	PROJECT:	
Bonita Springs Utilities, Inc	TITLE: WATER DETAILS	SCALE: NOT TO SCALE
		DATE: APRIL 2019
	11900 E. TERRY STREET BONITA SPRINGS, FLORIDA 34135 PHONE: (239) 992-0711 FAX: (239) 992-9233	DWG #: WDET.DWG
		SHEET OF

Order Plans @ WWW.LDILine.com

BOHLER ENGINEERING
SITE CIVIL AND CONSULTING ENGINEERING
LAND SURVEYING
PROGRAM MANAGEMENT
LANDSCAPE ARCHITECTURE
SUSTAINABLE DESIGN
PERMITTING SERVICES
TRANSPORTATION SERVICES

THE INFORMATION, DESIGN AND CONTENT OF THIS PLAN ARE PROPRIETARY AND SHALL NOT BE COPIED OR USED FOR ANY PURPOSE WITHOUT PRIOR WRITTEN AUTHORIZATION FROM BOHLER ENGINEERING. ONLY APPROVED, SIGNED AND SEALED PLANS SHALL BE UTILIZED FOR CONSTRUCTION PURPOSES
© 2018 BOHLER ENGINEERING

REVISIONS

REV	DATE	COMMENT	BY

811
KNOW WHAT'S BELOW
ALWAYS CALL 811
BEFORE YOU DIG
It's fast. It's free. It's the law.

NOT APPROVED FOR CONSTRUCTION

PROJECT No.:	FLB180133
DRAWN BY:	LJL
CHECKED BY:	AS
DATE:	01/27/2020
SCALE:	AS SHOWN
CAD I.D.:	SD0

PROJECT:
ENGINEERING PLANS
FOR
ENCORE REAL ESTATE

LOCATION OF SITE
28100 S TAMIAMI TRAIL
BONITA SPRINGS, FL 34134
LEE COUNTY, FLORIDA

BOHLER ENGINEERING
3820 NORTHDALE BLVD., SUITE 300B
TAMPA, FLORIDA 33624
Phone: (813) 812-4100
Fax: (813) 812-4101
FLORIDA BUSINESS CERT. OF AUTH. No. 30780
LANDSCAPE ARCHITECT BUSINESS LIC. No LC26000551

SHEET TITLE:
CONSTRUCTION DETAILS

SHEET NUMBER:
C-902