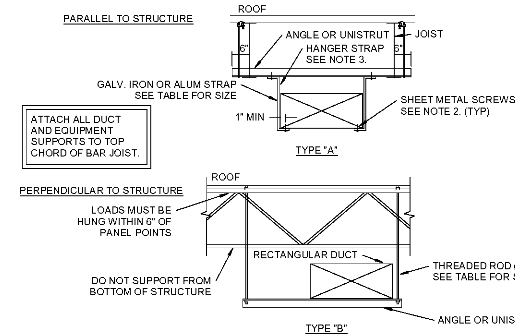


DUCT HANGER SCHEDULE

| DUCT SIZE (INCH) | TYPE OF HANGER | HANGER SPACING (FT) | STRAP SIZE | ROD SIZE (INCH) | ANGLE FOR BRACING |
|---|---|---|---|---|---|
| UP TO 12 | A | 8'-0" | 1"x16GA | N.A. | N.A. |
| 13 TO 18 | A | 8'-0" | 1"x16GA | N.A. | N.A. |
| 19 TO 30 | A/B | 8'-0" | 1"x16GA | 1/4" | 1-1/2"x1-1/2"x1/8" |
| 31 TO 42 | B | 8'-0" | N.A. | 1/4" | 1-1/2"x1-1/2"x1/8" |
| 43 TO 54 | B | 8'-0" | N.A. | 1/4" | 1-1/2"x1-1/2"x1/8" |
| 55 TO 60 | B | 8'-0" | N.A. | 1/4" | 1-1/2"x1-1/2"x1/8" |
| 61 TO 84 | B | 8'-0" | N.A. | 1/4" | 1-1/2"x1-1/2"x3/16" |
| 85 TO 96 | B | 8'-0" | N.A. | 1/4" | 1-1/2"x1-1/2"x3/16" |
| OVER 96 | B | 8'-0" | N.A. | 3/8" | 2"x2"x1/4" |

NOTES:

1. FOR SEVERAL DUCTS ON ONE HANGER, TYPE "B" MAY BE USED. SIZE OFHANGER WILL BE SELECTED ON THE SUM OF DUCT WIDTHS EQUAL TO MAX WIDTH OF DUCT SCHEDULE.
2. ON TYPE "A" HANGER, PROVIDE 3 HANGERS AT EACH TAKE-OFF OR BRANCH.
3. SHEET METAL SCREWS MAY BE OMITTED IF HANGER STRAP IS CONTINUOUS AND LOOPS UNDER ENTIRE DUCT.

## 6 DUCT SUPPORT DETAIL
SCALE: NOT TO SCALE

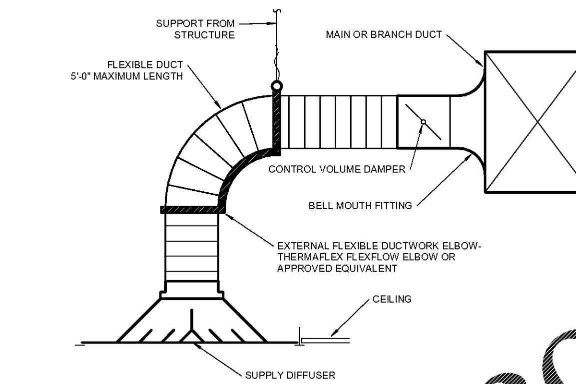


## 3 CEILING DIFFUSER DETAIL
SCALE: NOT TO SCALE

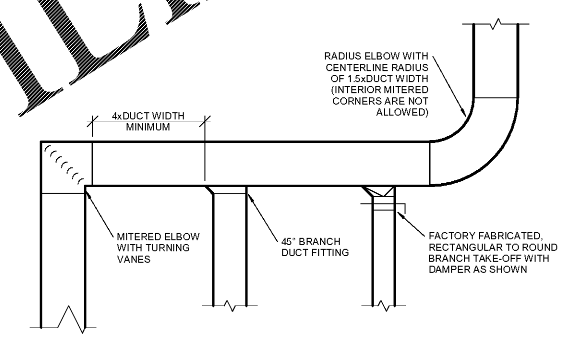


## 2 DUCTWORK CONSTRUCTION DETAIL
SCALE: NOT TO SCALE

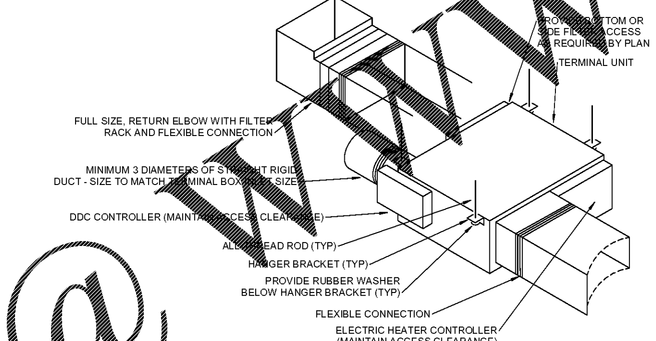


NOTE:
VERIFY CONTROLLER ACCESS ORIENTATION WITH PLAN TO PROVIDE WORKING CLEARANCE

## 5 FAN TERMINAL UNIT WITH ELECTRIC HEAT DETAIL
SCALE: NOT TO SCALE

CONTROLS ABBREVIATIONS LEGEND:

| | |
|---|---|
| AO, DO | ANALOG OUTPUT, DIGITAL OUTPUT |
| AI, DI | ANALOG INPUT, DIGITAL INPUT |
| C | CO2 SENSOR |
| DP | DIFFERENTIAL PRESSURE SENSOR |
| M | MOTORIZED ELECTRONIC VALVE OR DAMPER ACTUATOR |
| T | TEMPERATURE SENSOR |
| D | DUCT SMOKE DETECTOR |

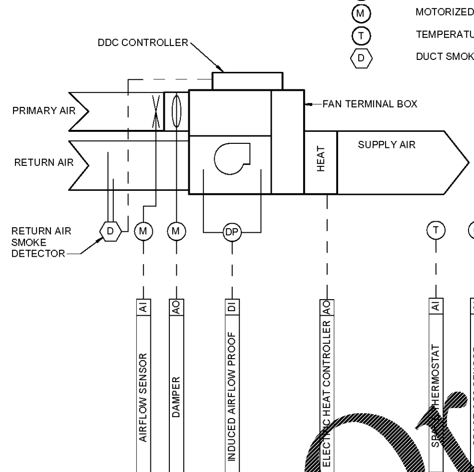


FAN TERMINAL BOX CONTROL SEQUENCE:

1. OCCUPIED COOLING MODE: THE PRIMARY AIR INLET AIRFLOW SENSOR SHALL BE CALIBRATED TO MEASURE THE PRIMARY AIRFLOW THROUGH THE TERMINAL UNIT. THE AIRFLOW SENSOR SHALL PROVIDE INPUT TO MODULATE THE BOX PRIMARY AIR CONTROL DAMPER TO MAINTAIN THE PROPER VOLUME OF AIR AT ALL TIMES TO MAINTAIN TEMPERATURE SETPOINT OF 73 DEGREES F (ADJUSTABLE). MAXIMUM AND MINIMUM PRIMARY AIRFLOW SHALL BE SET PER THE SCHEDULES. MODULATE THE PRIMARY AIR DAMPER OPEN AS NEEDED TO MAINTAIN A MAXIMUM CO2 LEVEL OF 1000 PPM (ADJUSTABLE).

2. OCCUPIED HEATING MODE: WHEN THE SPACE TEMPERATURE DROPS BELOW THE OCCUPIED HEATING SETPOINT, THE RETURN FAN SHALL TURN ON AND RUN CONTINUOUSLY DURING THE OCCUPIED HEATING MODE. THE PRIMARY AIR INLET SHALL RETURN TO THE MINIMUM SETTING AS LISTED ON THE SCHEDULES. MODULATE THE PRIMARY AIR DAMPER OPEN AS NEEDED TO MAINTAIN A MAXIMUM CO2 LEVEL OF 1000 PPM (ADJUSTABLE). THE UNIT CONTROLLER SHALL CYCLE STAGES OF HEATING TO MAINTAIN HEATING SETPOINT OF 68 DEGREES F (ADJUSTABLE).

3. UNOCCUPIED COOLING MODE: DURING UNOCCUPIED COOLING MODE, THE PRIMARY AIR DAMPER SHALL MODULATE OPEN TO MAINTAIN THE UNOCCUPIED SETPOINT OF 85 DEGREES F (ADJUSTABLE). THE RETURN AIR FAN SHALL BE OFF.

4. UNOCCUPIED HEATING MODE: DURING UNOCCUPIED HEATING MODE, THE PRIMARY AIR DAMPER SHALL BE CLOSED. IF SPACE TEMPERATURES DROP BELOW 55 DEGREES F (ADJUSTABLE), THE RETURN AIR FAN SHALL CYCLE ON AND THE UNIT CONTROLLER SHALL CYCLE STAGES OF HEATING TO MAINTAIN THE UNOCCUPIED HEATING SETPOINT OF 55 DEGREES F (ADJUSTABLE).

5. SMOKE ACTIVATED FIRE PROTECTION CONTROL: DUCT MOUNTED SMOKE DUCT DETECTOR SHALL BE INSTALLED AS SHOWN ON THE HVAC AIR FLOW SCHEMATIC TO AUTOMATICALLY CLOSE DAMPER AND SHUT DOWN FAN AND SEND SIGNAL TO THE FIRE ALARM SYSTEM. IF THIS ACTION OCCURS, CONTROLLER SHALL SEND EMERGENCY ALARM SIGNAL TO SYSTEM. UNIT SHALL REQUIRE MANUAL START-UP IF THIS ACTION OCCURS.

## 7 FAN TERMINAL BOX CONTROLS
SCALE: NOT TO SCALE

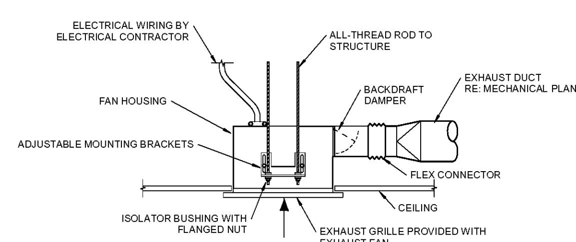


## 4 CEILING EXHAUST FAN DETAIL
SCALE: NOT TO SCALE

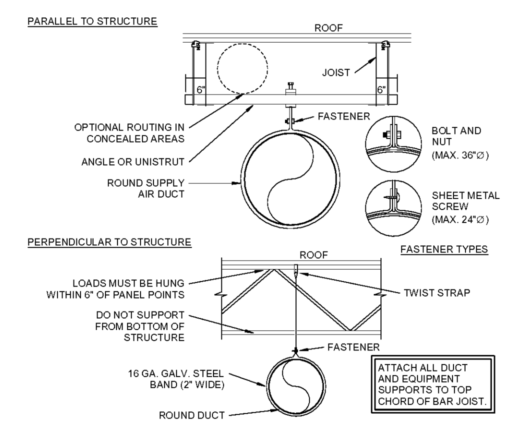


NOTES:

1. FOR DUCTS LARGER THAN 36"Ø, USE TWO HANGER RODS, WIRES OR STRAPS TO SUPPORT DUCT FROM EACH SIDE.

## 1 DUCT SUPPORT DETAIL
SCALE: NOT TO SCALE

Order Plans @ WWW.LDILine.com

rtm engineering consultants

9225 Indian Creek Pkwy., Suite 1075 | Overland Park, KS 66210
T: 913.322.1400 : www.rtmassociates.com
GEORGIA COA #: PEF006838

hcklover architect
8813 PENROSE LANE, SUITE 400 • LENEXA, KS 66219
ph: 913.649.8181 • fx: 913.649.1275 • www.klover.net

THIS DRAWING has been prepared by the Architect, or prepared under his direct supervision as an instrument of service and is intended for use only on this project. All Drawings, Specifications, ideas and designs, including the overall layout, form, arrangement, and composition of spaces and elements portrayed, constitute the original, unpublished Work of the Architect. Any reproduction, use, or disclosure of the information contained herein without the written consent of the Architect is strictly prohibited.

© 2019 H.C. KLOVER ARCHITECT

THE ARCHITECT DISCLAIMS responsibility for the existing building structure, site conditions, existing construction elements, or any documents, drawings or other instruments used for any part of this Project which do not bear the Architect's seal. The Architect's services are undertaken only in the interest of the Project Owner. No obligation is assumed by the Architect for the benefit of any other entity.

RELATED DOCUMENTS: This Drawing is a single component of an integrated set of Construction Documents. General and Supplementary Conditions of the Contract, General Requirements, Specifications and other Drawings may affect the Work described. Failure to review and integrate the design intent of the whole of the Construction Documents does not relieve the Contractor from providing a complete Project.

COMPLY WITH all laws, codes, ordinances and regulations with authorities having jurisdiction and with requirements of the Landlord, if applicable. Do not start Work until all permits and required approvals are obtained.

VERIFY ACTUAL CONDITIONS and dimensions prior to construction. Commencement of work constitutes verification and acceptance of all existing conditions. Application of a material or equipment item to Work installed by others constitutes acceptance of that Work, and assumption of responsibility for satisfactory installation.

DIMENSIONS SHOWN are to finish face of a material unless otherwise indicated.

CONTRACTOR'S NOTES: Written dimensions hold preference over scaled dimensions. Do not scale the drawings. The contractors must visit job site to verify all existing conditions and dimensions before submitting bids. Report any discrepancies of any conditions which may interfere with the proper execution of the contract to the tenant's representative. Report discrepancies during bidding process and before start of construction. Change orders will not be approved for issues arising from the field conditions or conflicts between the plans and the existing conditions.

project title

HELZBERG DIAMONDS
STORE 211, NG-M
MALL OF GEORGIA
3333 BUFORD DR, 2070C
BUFORD, GEORGIA 30519

project number
19007.019

drawing issuance
OWNER/PERMIT/BID 1.7.20

drawing revisions

| Δ | Date: | Description: |
|---|---|---|
| | | |

professional seal

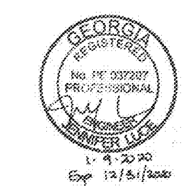


drawing title
HVAC DETAILS

drawing number
M200

1/9/2020 11:51:56 AM
C:\Revit\Revit 2019 Projects\HBBG_2019_paul.hough.rvt