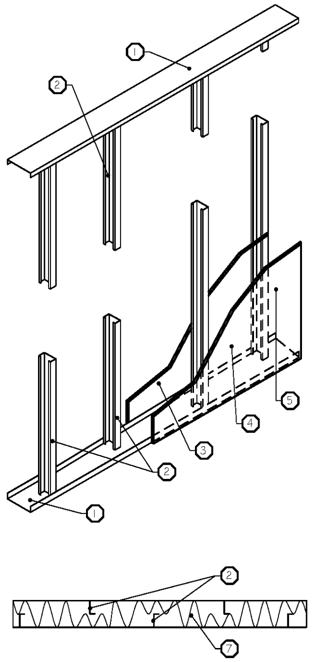

H	WALL TYPE
1.) Floor & Ceiling Runners - Shaped runners, 6" wide, 1-1/4" legs formed from 18 msg. galv. steel, attached to floor & structure.	
2.) Steel Studs - Channel shaped, 3-5/8" wide, 1-1/4" legs, 3/8" folded back returns, formed from 18 msg. galv. steel spaced 12" o.c. max. staggered.	
3.) Wall Board Gypsum - type "x", 4'-0" wide, attached to steel studs and floor & ceiling track w/ 1" long Type "S" self tapping screws spaced 8" o.c. along edges of board and 12" o.c. in the field of the board. Joints oriented vertically and staggered on opposite sides of the assembly. Use water resistant gypsum board on all walls which will receive tile. Provide 5/8" type "x" on both sides to 6" above ceiling.	
4.) Joint Tape & Compound - Vinyl, dry or pre-mixed joint compound, applied in two coats to joints and screw heads. Paper tape 2" wide, embedded in first layer of compound over all joints.	
5.) Finish wall surface as required per applicable Finish Plans, Keys, or Schedules.	
6.) Wall system to extend from floor slab to 6" above finished ceiling. If there is no ceiling, extend to deck. Studs to extend to structure 4'-0" o.c. max. and allow for 2" of vertical movement at the point of attachment.	
7.) Batt insulation to be continuous while weaving through staggered studs.	

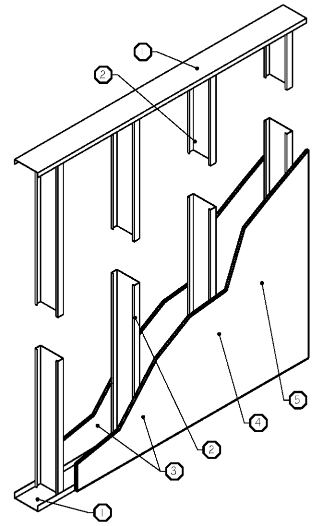

G	WALL TYPE
1.) Floor & Ceiling Runners - Shaped runners, 6" wide, 1-1/4" legs formed from 18 msg. galv. steel, attached to floor & structure.	
2.) Steel Studs - Channel shaped, 6" wide, 1-1/4" legs, 3/8" folded back returns, formed from 18 msg. galv. steel spaced 16" o.c. max.	
3.) Wall Board Gypsum - type "x", 4'-0" wide, attached to steel studs and floor & ceiling track w/ 1" long Type "S" self tapping screws spaced 8" o.c. along edges of board and 12" o.c. in the field of the board. Joints oriented vertically and staggered on opposite sides of the assembly. Use water resistant gypsum board on all walls which will receive tile. Provide 5/8" type "x" on both sides to 6" above ceiling.	
4.) Joint Tape & Compound - Vinyl, dry or pre-mixed joint compound, applied in two coats to joints and screw heads. Paper tape 2" wide, embedded in first layer of compound over all joints.	
5.) Finish wall surface as required per applicable Finish Plans, Keys, or Schedules.	
6.) Wall system to extend from floor slab to 6" above finished ceiling. If there is no ceiling, extend to deck. Studs to extend to structure 4'-0" o.c. max. and allow for 2" of vertical movement at the point of attachment.	

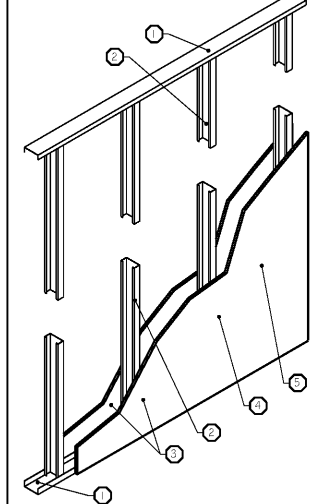

D	WALL TYPE
1.) Floor & Ceiling Runners - Shaped runners, 3-5/8" wide, 1-1/4" legs formed from 20 msg. galv. steel, attached to floor and structure.	
2.) Steel Studs - Channel shaped, 3-5/8" wide, 1-1/4" legs, 3/8" folded back returns, formed from 20 msg. galv. steel spaced 16" o.c. max.	
3.) Wall Board Gypsum - type "x", 4'-0" wide, attached to steel studs and floor & ceiling track w/ 1" long Type "S" self tapping screws spaced 8" o.c. along edges of board and 12" o.c. in the field of the board. Joints oriented vertically and staggered on opposite sides of the assembly. Use water resistant gypsum board on all walls which will receive tile. Provide 5/8" type "x" gyp. on both sides to 6" above ceiling.	
4.) Joint Tape & Compound - Vinyl, dry or pre-mixed joint compound, applied in two coats to joints and screw heads. Paper tape 2" wide, embedded in first layer of compound over all joints.	
5.) Finish wall surface as required per applicable Finish Plans, Keys, or Schedules.	
6.) Wall system to extend from floor slab to 6" above finished ceiling. If there is no ceiling, extend to deck. Studs to extend to structure 4'-0" o.c. max. and allow for 2" of vertical movement at the point of attachment.	

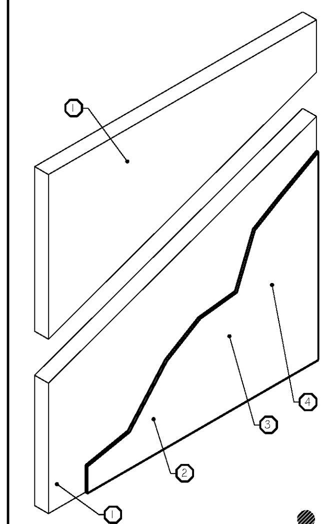

A1	WALL TYPE
1.) Floor & Ceiling Runners - Shaped runners, 6" wide, 1-1/4" legs formed from 20 msg. galv. steel, attached to floor & ceiling w/ fasteners spaced @ 16" o.c. G.C. to provide 5/8" Type "X" gyp. on both sides to metal deck. Wall shall be constructed to comply with U.L. Design #U-465, 1 hour rated.	
2.) Wall Board Gypsum - 5/8" thick, type "X", 4'-0" wide, attached to steel studs and floor & ceiling track w/ 1" long Type "S" self tapping screws spaced 8" o.c. along edges of board and 12" o.c. in the field of the board. Joints oriented vertically and staggered on opposite sides of the assembly. Use water resistant gypsum board on all walls which will receive tile. If applied over existing wall with gyp bd. already installed to deck, new gyp. bd. need only be to 6" above finished ceiling.	
3.) Joint Tape & Compound - Vinyl, dry or pre-mixed joint compound, applied in two coats to joints and screw heads. Paper tape 2" wide, embedded in first layer of compound over all joints.	
4.) Finish wall surface as required per applicable Finish Plans, Keys, or Schedules.	
5.) General contractor to maintain 1 hr. rating.	

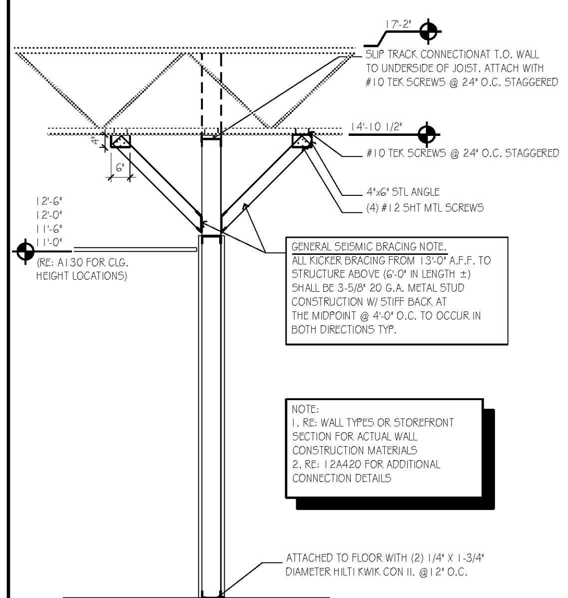

GENERAL SEISMIC BRACING NOTE.
ALL KICKER BRACING FROM 13'-0" A.F.F. TO STRUCTURE ABOVE (6'-0" IN LENGTH ±) SHALL BE 3-5/8" 20 G.A. METAL STUD CONSTRUCTION W/ STIFF BACK AT THE MIDPOINT @ 4'-0" O.C. TO OCCUR IN BOTH DIRECTIONS TYP.

NOTE:
1. RE: WALL TYPES OR STOREFRONT SECTION FOR ACTUAL WALL CONSTRUCTION MATERIALS
2. RE: 12A420 FOR ADDITIONAL CONNECTION DETAILS

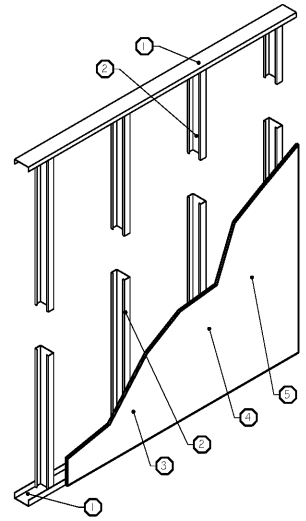

F	WALL TYPE
1.) Floor & Ceiling Runners - Shaped runners, 3-5/8" wide, 1-1/4" legs formed from 18 msg. galv. steel, attached to floor & structure.	
2.) Steel Studs - Channel shaped, 3-5/8" wide, 1-1/4" legs, 3/8" folded back returns, formed from 18 msg. galv. steel spaced 12" o.c. max.	
3.) Wall Board Gypsum (One side only) - type "x", 4'-0" wide, attached to steel studs and floor & ceiling track w/ 1" long Type "S" self tapping screws spaced 8" o.c. along edges of board and 12" o.c. in the field of the board. Joints oriented vertically and staggered on opposite sides of the assembly. Use water resistant gypsum board on all walls which will receive tile. Provide 5/8" type "x" on one side to 6" above ceiling.	
4.) Joint Tape & Compound - Vinyl, dry or pre-mixed joint compound, applied in two coats to joints and screw heads. Paper tape 2" wide, embedded in first layer of compound over all joints.	
5.) Finish wall surface as required per applicable Finish Plans, Keys, or Schedules.	
6.) Wall system to extend from floor slab to 6" above finished ceiling. If there is no ceiling, extend to deck. Studs to extend to structure 4'-0" o.c. max. and allow for 2" of vertical movement at the point of attachment.	

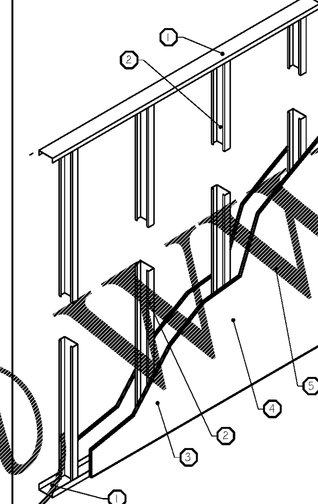

C	WALL TYPE
1.) Floor & Ceiling Runners - Shaped runners, 3-5/8" wide, 1-1/4" legs formed from 18 msg. galv. steel, attached to floor & structure.	
2.) Steel Studs - Channel shaped, 3-5/8" wide, 1-1/4" legs, 3/8" folded back returns, formed from 18 msg. galv. steel spaced 12" o.c. max.	
3.) Wall Board Gypsum - type "x", 4'-0" wide, attached to steel studs and floor & ceiling track w/ 1" long Type "S" self tapping screws spaced 8" o.c. along edges of board and 12" o.c. in the field of the board. Joints oriented vertically and staggered on opposite sides of the assembly. Use water resistant gypsum board on all walls which will receive tile. Provide 5/8" type "x" gyp. on both sides to 6" above ceiling.	
4.) Joint Tape & Compound - Vinyl, dry or pre-mixed joint compound, applied in two coats to joints and screw heads. Paper tape 2" wide, embedded in first layer of compound over all joints.	
5.) Finish wall surface as required per applicable Finish Plans, Keys, or Schedules.	
6.) Wall system to extend from floor slab to 6" above finished ceiling. If there is no ceiling, extend to deck. Studs to extend to structure 4'-0" o.c. max. and allow for 2" of vertical movement at the point of attachment.	

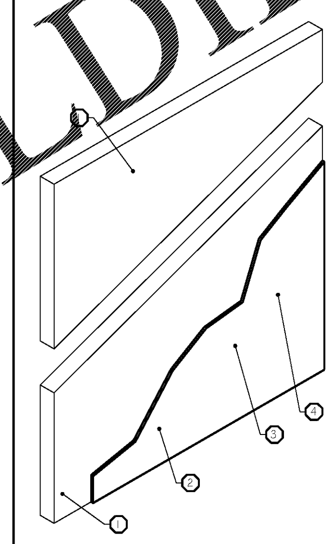

A	WALL TYPE
1.) Floor & Ceiling Runners - Existing metal stud attached to floor & ceiling w/ existing fasteners. Wall shall be constructed to comply with U.L. Design #U-465, 1 hour rated. G.C. to patch and repair existing Typ "X" gyp board to metal deck on tenant side. New gyp. board to align with existing gyp finish.	
2.) Wall Board Gypsum - 5/8" thick, type "X", 4'-0" wide, attached to steel studs and floor & ceiling track w/ 1" long Type "S" self tapping screws spaced 8" o.c. along edges of board and 12" o.c. in the field of the board. Joints oriented vertically and staggered on opposite sides of the assembly. Use water resistant gypsum board on all walls which will receive tile. If applied over existing wall with gyp bd. already installed to deck, new gyp. bd. need only be to 6" above finished ceiling.	
3.) Joint Tape & Compound - Vinyl, dry or pre-mixed joint compound, applied in two coats to joints and screw heads. Paper tape 2" wide, embedded in first layer of compound over all joints.	
4.) Finish wall surface as required per applicable Finish Plans, Keys, or Schedules.	
5.) General contractor to maintain 1 hr. rating.	

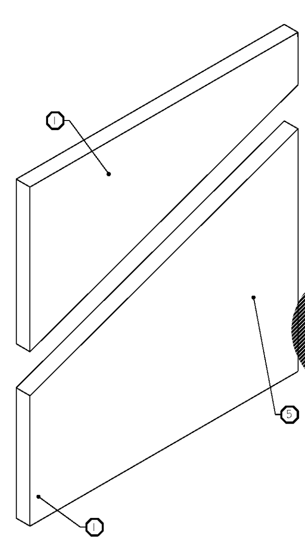

Z	WALL TYPE
1.) Floor & Ceiling Runners - Existing metal studs attached to floor and ceiling with existing fasteners. Landlord to provide 5/8" Type "X" gyp to deck. Wall shall be constructed to comply with U.L. Design #U-465, 1 hour rated.	
2.) Not used	
3.) Not used	
4.) Not used	
5.) Finish wall surface as required per applicable Finish Plans, Keys, or Schedules.	
6.) Not used	

NOTE:
NO GYP. BD. AT SINK LOCATION

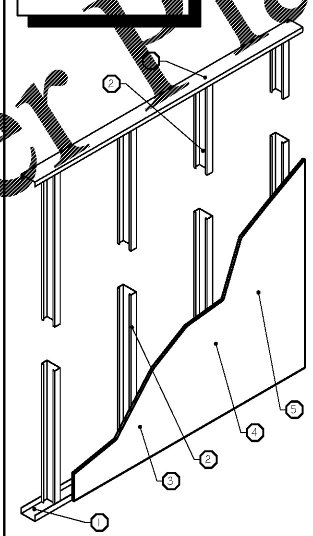

E	WALL TYPE
1.) Floor & Ceiling Runners - Shaped runners, 3-5/8" wide, 1-1/4" legs formed from 20 msg. galv. steel, attached to floor & structure.	
2.) Steel Studs - Channel shaped, 3-5/8" wide, 1-1/4" legs, 3/8" folded back returns, formed from 20 msg. galv. steel spaced 16" o.c. max.	
3.) Wall Board Gypsum (One side only) - type "x", 4'-0" wide, attached to steel studs and floor & ceiling track w/ 1" long Type "S" self tapping screws spaced 8" o.c. along edges of board and 12" o.c. in the field of the board. Joints oriented vertically and staggered on opposite sides of the assembly. Use water resistant gypsum board on all walls which will receive tile. Provide 5/8" type "x" on one side to 6" above ceiling.	
4.) Joint Tape & Compound - Vinyl, dry or pre-mixed joint compound, applied in two coats to joints and screw heads. Paper tape 2" wide, embedded in first layer of compound over all joints.	
5.) Finish wall surface as required per applicable Finish Plans, Keys, or Schedules.	
6.) Wall system to extend from floor slab to 6" above finished ceiling. If there is no ceiling, extend to deck. Studs to extend to structure 4'-0" o.c. max. and allow for 2" of vertical movement at the point of attachment.	

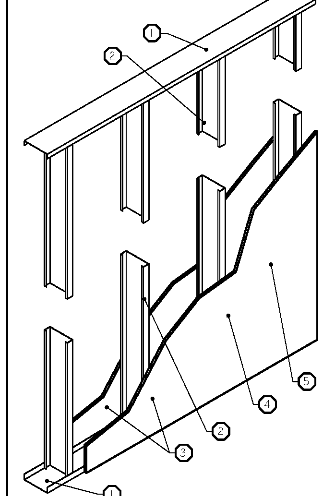

B	WALL TYPE
1.) Floor & Ceiling Runners - Shaped runners, 6" wide, 1-1/4" legs formed from 20 msg. galv. steel, attached to floor & structure.	
2.) Steel Studs - Channel shaped, 6" wide, 1-1/4" legs, 3/8" folded back returns, formed from 20 msg. galv. steel spaced 16" o.c. max.	
3.) Wall Board Gypsum - type "x", 4'-0" wide, attached to steel studs and floor & ceiling track w/ 1" long Type "S" self tapping screws spaced 8" o.c. along edges of board and 12" o.c. in the field of the board. Joints oriented vertically and staggered on opposite sides of the assembly. Use water resistant gypsum board on all walls which will receive tile. Provide 5/8" type "x" on both sides to 6" above ceiling.	
4.) Joint Tape & Compound - Vinyl, dry or pre-mixed joint compound, applied in two coats to joints and screw heads. Paper tape 2" wide, embedded in first layer of compound over all joints.	
5.) Finish wall surface as required per applicable Finish Plans, Keys, or Schedules.	
6.) Wall system to extend from floor slab to 6" above finished ceiling. If there is no ceiling, extend to deck. Studs to extend to structure 4'-0" o.c. max. and allow for 2" of vertical movement at the point of attachment.	

1. METAL STUDS

UNLESS NOTED OTHERWISE, ALL STUDS ARE TO BE COLD FORMED STEEL STUDS, CSJ20, ICBO 4943P FROM DIETRICH MANUFACTURER. (STUD SPACING AS INDICATED ON PARTITION TYPES.)

2. TOP TRACK

TOP TRACK 18 GA. DEFLECTION TRACK ATTACHED WITH HILTI POWDER ACTUATED .145 DIA. FASTENERS AT 12" O.C., MINIMUM OF 1" EMBED. EVALUATION REPORT ER 1752

3. BOTTOM TRACK

BOTTOM TRACK 18 GA., DEEP LEG OR RUNNER ATTACHED WITH HILTI POWDER ACTUATED FASTENERS, X-2FTHP, .145 DIA. AT 12" O.C. WITH A MINIMUN OF 1" EMBED. ICBO REPORT ER 1752 AND ER 4943P

4. HEIGHT LIMITATIONS FOR 20 GA.

HEIGHT LIMITATIONS FOR 20 GA. STUDS @ 16" O.C.
(TO BE USED ON STUDS SPANNING FLOOR TO ROOF DECK.)

3 5/8" METAL STUDS - 15'-5"
4" METAL STUDS - 16'-6"
6" METAL STUDS - 22'-10"
8" METAL STUDS - 28'-8"

FIRE RATED SYSTEM DESIGN - UL U465 - EXTERIOR WALLS - STEEL STUD (NON-LOADBEARING)
FIRE RATING: 1 HOUR
SYSTEM TH9CKNESS 4-7/8"

1. GYPSUM BOARD - 5/8" THICK GYP. BD. APPLIED VERTICALLY

2. STEEL STUDS - 3-5/8" DEEP BY 1-1/4" WIDE 25 GAUGE STEEL, SPACING @ MAX 24" O.C.

3. GYPSUM BOARD - 5/8" THICK GYPSUM PANELS WITH BEVELED, SQUARE OR TAPERED EDGES, APPLIED VERTICALLY OR HORIZONTALLY. VERTICAL JOINTS CENTERED OVER STUDS AND STAGGERED ONE STUD CAVITY ON OPPOSITE SIDES OF STUDS.

GENERAL PARTITION NOTES (1)
SCALE:

REFERENCE

NOTE: NOT ALL KEYNOTES USED

REFERENCE NUMBER	DESCRIPTION
2.0	EXISTING CONDITIONS
2.01	PROTECTING EXISTING TO REMAIN AS IS
2.40	REMOVE EXISTING & DISPOSE OF LEGALLY
2.41	REMOVE EXISTING - CLEAN, STORE & REINSTALL
2.42	REMOVE EXISTING - TURN OVER TO OWNER
4.0	MASONRY
4.1	MASONRY WALL W/ HOIZ. JOINT REINF.
4.2	SMOOTH-FACE CMU W/ SOLID GROUT FILL @ ALL CELLS
5.0	METALS
5.1	6" METAL STUDS, 16" O.C. (MAX.), OR AS NOTED
5.2	3 5/8" x 20 GA METAL STUDS, 16" O.C. (MAX.) UNO; REFER TO A610 - WALL TYPES
5.3	2 1/2" x 20 GA METAL STUDS, 16" O.C. (MAX.) UNO; REFER TO A610 - WALL TYPES
5.4	1 5/8" x 20 GA METAL STUDS, 16" O.C. (MAX.) UNO; REFER TO A610 - WALL TYPES
5.5	7/8" HAT CHANNEL, 24" O.C. (MAX.), OR AS NOTED
5.6	6" X 20 GA TRACK W/ 1 5/8" FLANGE
5.7	3 5/8" x 20 GA METAL TRACK WITH 1 1/4" FLANGE; REFER TO A610 - WALL TYPES
5.8	2 1/2" x 20 GA METAL TRACK WITH 1 1/4" FLANGE; REFER TO A610 - WALL TYPES
5.9	1 5/8" x 20 GA METAL TRACK WITH 1 1/4" FLANGE; REFER TO A610 - WALL TYPES
5.10	(4) #12-14 TEK SCREWS
5.11	12 GA WIRE TIED TO STRUCT. AND 1 5/8" [illegible] GAUGE METAL FRAMING @ 4'-0" O.C.
5.12	12 GA WIRE TIED TO STRUCT. AND LAY-IN CEILING GRID
5.13	[illegible] GAUGE METAL FRAMING @ 4'-0" O.C.
5.14	NOT USED
5.15	1/4 X1/8 DIVIDER
5.16	SCHLUTER STRIP RENO-V - STAINLESS STEEL
5.17	NOT USED
5.18	DOUBLE "C" JOIST HEAD, 4X12 GA.
5.19	[illegible] CLIP ANGLE
5.20	3-5/8" SLIP TRACK
5.21	1" SQ FULLY WELDED "LADDER" FRAME SIDE TO SIDE
5.22	STRUCTURAL STEEL ANGLE, RE: STRUCTURAL
5.23	STRUCTURAL STEEL TUBE, RE: STRUCTURAL
5.24	CURVED METAL CUSTOM SHOE TO SUPPORT METAL/ACRYLIC PANELS
5.25	3 5/8" x 18 GA METAL FRAMING 12" OC @ SECURITY GATE ENCLOSURE & OVERHEAD TRACK TYPICAL
5.26	3/4"W x 1/2"D x 96"L BRUSED ALUM. REVEAL
5.27	1 5/8" COLD ROLLED CHANNEL
5.28	8 GA WIRE TIED TO STRUCT. AND COLD ROLLED CHANNEL
5.29	3625162-54 CONT. ATTACH TO EXIST. BEAM W/ (3) #10-16 S.D.T. SCREWS ATTACH TO EA. STUD W/ (2) #10-16 S.D.T. SCREWS (TYP)
5.30	16 GA. CLIP
5.31	3625162-54 @ 16" SPACE
5.32	(4) #10-16 S.D.T. SCREWS MIN. AS SHOW (TYP.)
5.33	(2) 1/4" Ø CONT. SCREW ANCHORS
5.34	SCHLUTER STRIP RENO-TK - 3/8" BR. NICKEL ANOD. ALUM.
5.35	3/8" O BOLT
5.36	L3x2x1/4 ANGLE BRACE - COPE END & ATTACH TO EXIST. METAL DECK W/ 3/8" Ø THRU BOLT - SNUG TIGHTEN
5.37	L3x2x1/4 ANGLE @ 48" SPA. - SPAN BETWEEN BOLT. CHORD OF EXIST. JOIST FRAMING AND ATTACH W/ 3/8" Ø BOLT AS SHOWN SNUG TIGHT (TYP.)
5.38	3625162-54 CONT. ATTACH TO EXIST. BEAM W/ (3) #10-16 S.D.T. SCREWS
5.39	P1000 UNISTRUT - 6'-0" LONG W/ ALL THREAD, WASHERS, NUTS, AND UNISTRUT SPRING NUTS
5.40	15"H x 31"W x 10-1/4"D - METAL BOX PROVIDED BY OWNERS VENDOR
5.41	STYLMARK J-MOLD #420068 - 12 FT STOCK LENGTH
5.42	STYLMARK 135° COLUMN TRIM #120066 - 12 FT LENGTH
5.43	STYLMARK HEADER #110360 (12 FT) & ENDCAP #410412
5.44	STYLMARK WALLMARKER 6" SILL #110481 (12 FT)
5.45	STYLMARK 90° COLUMN TRIM #120058 - 12 FT LENGTH
5.46	STYLMARK J-MOLD #420107 - 12FT LENGHT
5.47	6"X20 GA TRACK W/ 1 5/8" FLANGE
5.48	1/4x1/8 DIVIDER
5.49	6" STRUCTURAL STEEL METAL STUD
5.50	METAL SHOE TO SUPPORT PANELS
5.51	DOUBLE "C" JOIST HEAD, 4x12 GA.
5.52	STYLMARK ANCHOR FOR SILL #110358 - 12 FT LENGHT
5.53	STYLMARK WALL MAKER SILL ENDCAP #410545
6.0	CARPENTRY
6.1	FIRE TREATED WOOD BLOCKING BY G.C.
6.2	3/4" FIRE TREATED PLYWOOD
6.3	5/8" FIRE TREATED AB PLYWOOD INSTALLED IN METAL STOREFRAME SYSTEM PAINTED BLACK BOTH SIDES
6.4	FIRE TREATED WOOD DOOR HEADER FRAMING
6.5	1" X 10" WOOD VENEER STOREFRONT BROW
6.6	1/2" FIRE TREATED PLYWOOD W/NON-ABRASIVE 1/4" CUSHION BACKING
6.7	1/2" x 4" APPLIED WOOD BASE AS SPECIFIED
6.8	1/2" FIRE TREATED PLYWOOD APPLIED TO STUDS
6.9	2x6 FIRE TREATED WOOD FRAMING
6.10	2x8 FIRE TREATED DOUBLE STUD
6.11	FIRE TREATED WOOD BLOCKING
6.12	1/2"x1 1/2" HARD WOOD MOLDING
6.13	3/4" HDWD. FRAME W/ 1/2"x1-1/2" STOP, PAINT TO MATCH ADJ. SURFACE.
6.14	1x4 WOOD TRIM PIECE
7.0	THERMAL & MOISTURE PROTECTION
7.1	4 MIL. TRANSLUCENT POLY SECURED TO KICKERS
7.2	4 MIL. TRANSLUCENT POLY TO COVER EXISTING MALL TILE
7.3	NOT USED
7.4	NOT USED
7.5	NOT USED
8.0	DOORS & WINDOWS
8.1	1/2" TEMPERED CLEAR GLAZING
8.2	3/8" TEMPERED CLEAR GLAZING
8.3	TUBELITE LC LIGHT CHAMPAGNE CLASS 1 ANODIZE STOREFRONT SERIES W/ POCKET ADAPTOR 451VG030
8.4	CENTER LINE OF HORIZONTAL SLIDING GRILL
8.5	OVER HEAD GRILLE MOTOR
8.6	OVER HEAD GRILLE AND TUBE STEEL SUPPORT
8.7	HOLLOW METAL DOOR FRAME
8.8	GPDR, SECURITY GRILLE ACCESS BY FIXTURE CONTR.
9.0	FINISHES
9.1	1/2" GYP BD
9.2	5/8" GYP BD
9.3	5/8" TYPE "X" GYP BD (COMPLIES W/ ASTM C36)
9.4	EXISTING MALL TILE TO REMAIN
9.5	EXISTING MALL BULKHEAD TO REMAIN
9.6	6" WIDE "STAY LONG TAPE" (BLUE) INSTALLED AT LEASE LINE
9.7	EXISTING MALL FLOOR SLAB TO REMAIN
9.8	PLASTIC LAMINATE APPLIED TO 5/8" FIRE TREATED PLYWOOD
9.9	1" X 2 1/4" VERTICAL UPRIGHT FINS WITH PL-1
9.10	LAY-IN ACT AND GRID AS SPECIFIED
9.11	INTERIOR BATT INSULATION FOR SOUND ABSORPTION
9.12	1" X 1 1/2" VERTICAL UPRIGHT FINS PL-1
9.13	CURVED CUSTOM METAL PATTERNED PANELS MOUNTED ON ACRYLIC BACKER PANEL
9.14	FABRIC DRAPERY AS SPECIFIED
9.15	MALL FACING FINS; 1" X 2 1/2" INTERIOR VERTICAL UPRIGHTS WITH WOOD FINISH
9.16	STOREFRONT SALES AREA FACING FINS; 1" X 2 1/8"
9.17	1/2" CEMENT BOARD
9.18	SEALANT & BACKER ROD
9.19	STOREFRONT TILE
9.20	5/8" METAL J TRIM
9.21	3 5/8" LIGHT GA BUILT UP COLUMN
9.22	14 GA. CLIP ANGLE
10.0	SPECIALTIES
10.1	CIRCULAR LOUVRES - LESLIE LOCKE 2"DIA. - #RLSC2
10.2	GRAB BAR - BRADLEY 1 1/4"DIA.x36" SATIN FINISH - 8322-00136
10.3	GRAB BAR - BRADLEY 1 1/4"DIA.x42" SATIN FINISH - 8322-00142
10.4	WELDED-FRAME MIRROR -BOBRICK 18" W x 30"H - #B-293 1830
10.5	PAPER TOWEL DISPENSER - BRADLEY SURFACE MOUNTED 10 13/16"Wx14 1/16"Hx3 15/16"D - B-262
10.6	DOUBLE-ROLL TOILET PAPER DISPENSER - BOBRICK SURFACE MOUNTED - B-2740
10.7	SANITARY NAPKIN DISPOSAL-BOBRICK SURFACE MOUNTED 7 1/2"Wx10"Hx1-11/16" 7 1/2"Wx10"Hx1-11/16" - B-270
10.8	SOAP DISPENSER - BRADLEY 24 FL. OZ. -6501
10.9	TOWEL DISPENSER - BOBRICK B-253
10.10	GRAB BAR - BRADLEY 1 1/4"DIA.x18" SATIN FINISH - 8322-00118
10.11	HELZBERG SIGNAGE - RE: SIGN DRAWINGS
10.12	LED STRIP LIGHTING AS SPECIFIED W/ REMOTE TRANSFORMERS LOCATED ABOVE LAY-IN CEILING
10.13	EXISTING MALL TILE TO REMAIN
10.14	FOLDING SECURITY GRILLE WITH RECESSED TRACK
10.15	DRAPERY TRACK
10.16	EXISTING MALL STRUCTURE TO REMAIN
10.17	MALL NEUTRAL PIER
10.18	TOILET PAPER DISPENSER - BRADLEY SURFACE MOUNTED SINGLE ROLL - 5084
10.25	FULL LENGTH MIRROR: BOBRICK - 60"x20", B-290 2060
11.0	EQUIPMENT
15.0	MECHANICAL (REFERENCE MECHANICAL DRAWINGS)
16.0	ELECTRICAL (REFERENCE ELECTRICAL DRAWINGS)
16.1	SECURITY EQUIPMENT

hckloverarchitect
8813 PENROSE LANE, SUITE 400 • LENEXA, KS 66219
ph: 913.649.8181 • fx: 913.649.1275 • www.klover.net

THIS DRAWING has been prepared by the Architect, or prepared under his direct supervision as an instrument of service and is intended for use only on this project. All Drawings, Specifications, ideas and designs, including the overall layout, form, arrangement, and composition of spaces and elements portrayed, constitute the original, unpublished Work of the Architect. Any reproduction, use, or disclosure of the information contained herein without the written consent of the Architect is strictly prohibited.
© 2019 H.C. KLOVER ARCHITECT

THE ARCHITECT DISCLAIMS responsibility for the existing building structure, site conditions, existing construction elements, or any documents, drawings or other instruments used for any part of this Project which do not bear the Architect's seal. The Architect's services are undertaken only in the interest of the Project Owner. No obligation is assumed by the Architect for the benefit of any other entity.

RELATED DOCUMENTS: This Drawing is a single component of an integrated set of Construction Documents. General and Supplementary Conditions of the Contract, General Requirements, Specifications and other Drawings may affect the Work described. Failure to review and integrate the design intent of the whole of the Construction Documents does not relieve the Contractor from providing a complete Project.

COMPLY WITH all laws, codes, ordinances and regulations with authorities having jurisdiction and with requirements of the Landlord, if applicable. Do not start Work until all permits and required approvals are obtained.

VERIFY ACTUAL CONDITIONS and dimensions prior to construction. Commencement of work constitutes verification and acceptance of all existing conditions. Application of a material or equipment item to Work installed by others constitutes acceptance of that Work, and assumption of responsibility for satisfactory installation.

DIMENSIONS SHOWN are to finish face of a material unless otherwise indicated.

CONTRACTOR'S NOTES: Written dimensions hold preference over scaled dimensions. Do not scale the drawings. The contractors must visit job site to verify all existing conditions and dimensions before submitting bids. Report any discrepancies of any conditions which may interfere with the proper execution of the contract to the tenant's representative. Report discrepancies during bidding process and before start of construction. Change orders will not be approved for issues arising from the field conditions or conflicts between the plans and the existing conditions.

projecttitle

HELZBERG DIAMONDS
STORE 211, NG-M
MALL OF GEORGIA
3333 BUFORD DR, 2070C
BUFORD, GEORGIA 30519

projectnumber
19007.019

drawingissuance
OWNER/PERMIT/BID 1.7.20

drawingrevisions

Δ	Date:	Description:

professionalseal

drawingtitle
WALL TYPES

drawingnumber
A610

Order Plans @ WWW.LDIILine.com