Order Plans @ WWW.LDILine.com

## NOT USED (16)
SCALE:

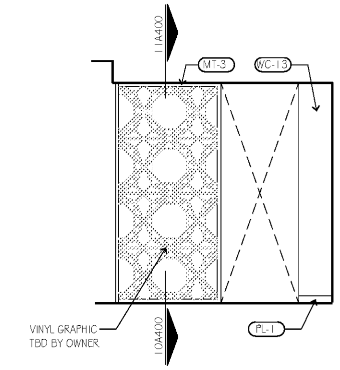


## INTERIOR ELEVATION (12)
SCALE: 1/4" = 1'-0"

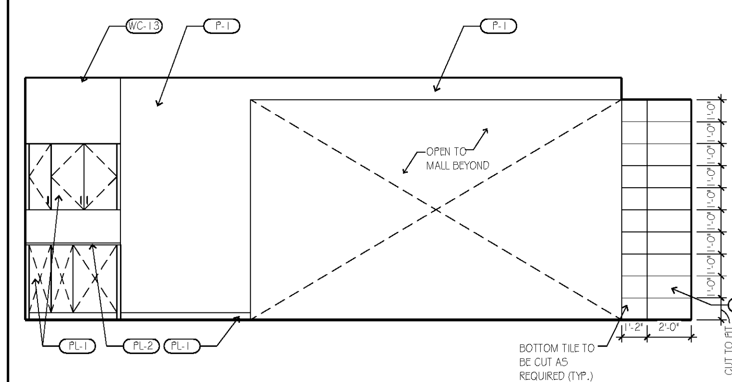


## INTERIOR ELEVATION (8)
SCALE: 1/4" = 1'-0"

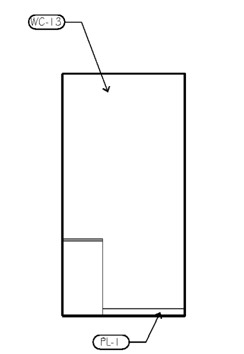


## INTERIOR ELEVATION (4)
SCALE: 1/4" = 1'-0"

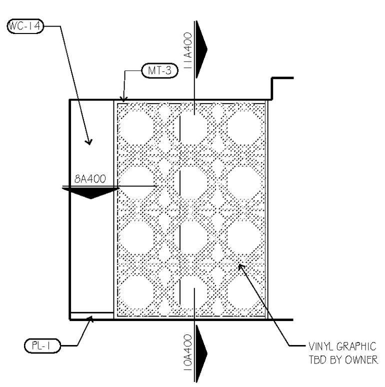


## INTERIOR ELEVATION (15)
SCALE: 1/4" = 1'-0"

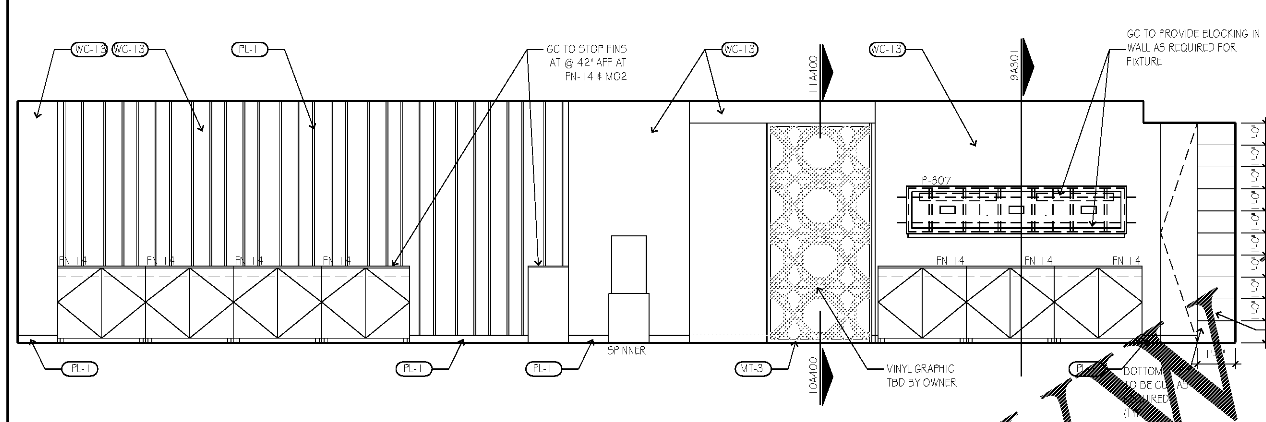


## INTERIOR ELEVATION (7)
SCALE: 1/4" = 1'-0"

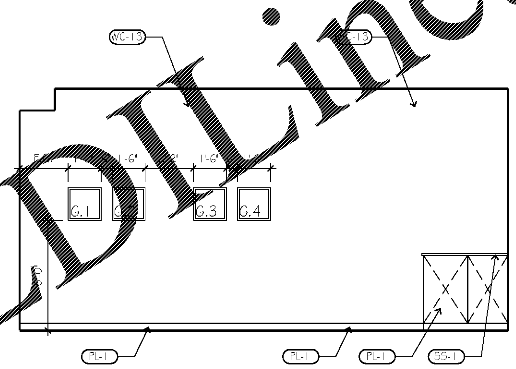


## INTERIOR ELEVATION (3)
SCALE: 1/4" = 1'-0"

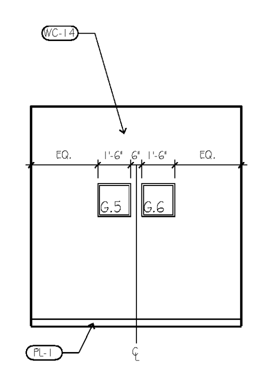


## INTERIOR ELEVATION (14)
SCALE: 1/4" = 1'-0"

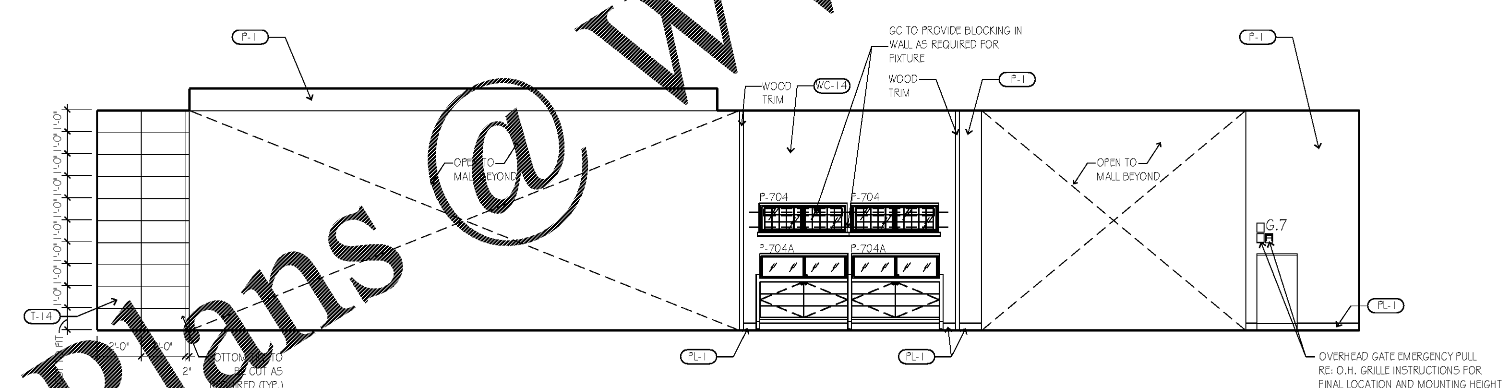


## INTERIOR ELEVATION (2)
SCALE: 1/4" = 1'-0"

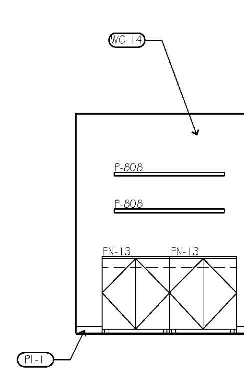


## INTERIOR ELEVATION (13)
SCALE: 1/4" = 1'-0"

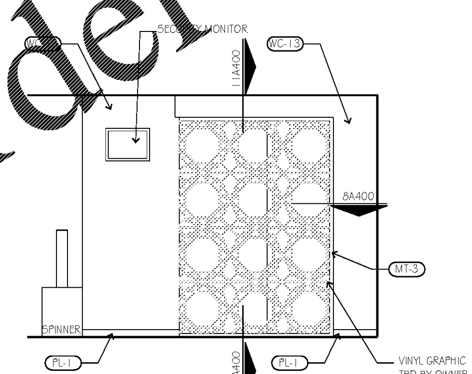


## INTERIOR ELEVATION (9)
SCALE: 1/4" = 1'-0"

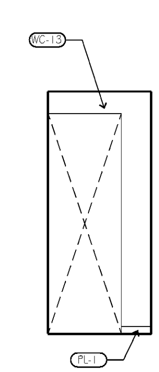


## INTERIOR ELEVATION (5)
SCALE: 1/4" = 1'-0"

DIAMOND ROOM GRAPHIC

1. FOR INTERIOR ELEVATION GRAPHICS INFORMATION REFERENCE GRAPHIC PLAN AND DETAILS SHEET.

## GENERAL NOTES (1)
SCALE:

## REFERENCE

NOTE: NOT ALL KEYNOTES USED

| REFERENCE NUMBER | DESCRIPTION |
|---|---|
| 2.0 | EXISTING CONDITIONS |
| 2.01 | PROTECTING EXISTING TO REMAIN AS IS |
| 2.40 | REMOVE EXISTING & DISPOSE OF LEGALLY |
| 2.41 | REMOVE EXISTING - CLEAN, STORE & REINSTALL |
| 2.42 | REMOVE EXISTING - TURN OVER TO OWNER |
| 4.0 | MASONRY |
| 4.1 | MASONRY WALL W/ HOIZ. JOINT REINF. |
| 4.2 | SMOOTH-FACE CMU W/ SOLID GROUT FILL @ ALL CELLS |
| 5.0 | METALS |
| 5.1 | 6" METAL STUDS, 16" O.C. (MAX.), OR AS NOTED |
| 5.2 | 3 5/8" x 20 GA METAL STUDS, 16" O.C. (MAX.) UNO; REFER TO A610 - WALL TYPES |
| 5.3 | 2 1/2" x 20 GA METAL STUDS, 16" O.C. (MAX.) UNO; REFER TO A610 - WALL TYPES |
| 5.4 | 1 5/8" x 20 GA METAL STUDS, 16" O.C. (MAX.) UNO; REFER TO A610 - WALL TYPES |
| 5.5 | 7/8" HAT CHANNEL, 24" O.C. (MAX.) OR AS NOTED |
| 5.6 | 6" X 20 GA TRACK W/ 1 5/8" FLANGE |
| 5.7 | 3 5/8" x 20 GA METAL TRACK WITH 1 1/4" FLANGE; REFER TO A610 - WALL TYPES |
| 5.8 | 2 1/2" x 20 GA METAL TRACK WITH 1 1/4" FLANGE; REFER TO A610 - WALL TYPES |
| 5.9 | 1 5/8" x 20 GA METAL TRACK WITH 1 1/4" FLANGE; REFER TO A610 - WALL TYPES |
| 5.10 | (4) #12-14 TEK SCREWS |
| 5.11 | 12 GA WIRE TIED TO STRUCT. AND 3 5/8" X 18 GAUGE METAL FRAMING @ 4'-0" O.C. |
| 5.12 | 12 GA WIRE TIED TO STRUCT. AND LAY-IN CEILING GRID |
| 5.13 | 1 5/8" X 18 GAUGE METAL FRAMING @ 4'-0" O.C. |
| 5.14 | NOT USED |
| 5.15 | 1/4 X1/8 DIVIDER |
| 5.16 | SCHLUTER STRIP RENO-V - STAINLESS STEEL |
| 5.17 | NOT USED |
| 5.18 | DOUBLE "C" JOIST HEAD, 4X12 GA. |
| 5.19 | 14 GA. CLIP ANGLE |
| 5.20 | 3-5/8" SLIP TRACK |
| 5.21 | 1" SQ FULLY WELDED "LADDER" FRAME SIDE TO SIDE |
| 5.22 | STRUCTURAL STEEL ANGLE, RE: STRUCTURAL |
| 5.23 | STRUCTURAL STEEL TUBE, RE: STRUCTURAL |
| 5.24 | CURVED METAL CUSTOM SHOE TO SUPPORT METAL/ACRYLIC PANELS |
| 5.25 | 3 5/8" x 18 GA METAL FRAMING 12" OC @ SECURITY GATE ENCLOSURE & OVERHEAD TRACK TYPICAL |
| 5.26 | 3/4"W x 1/2"D x 96"L BRUSED ALUM. REVEAL |
| 5.27 | 1 5/8" COLD ROLLED CHANNEL |
| 5.28 | 8 GA WIRE TIED TO STRUCT. AND COLD ROLLED CHANNEL |
| 5.29 | 3625162-54 CONT. ATTACH TO EXIST. BEAM W/ (3) #10-16 S.D.T. SCREWS ATTACH TO EA. STUD W/ (2) #10-16 S.D.T. SCREWS (TYP) |
| 5.30 | 16 GA. CLIP |
| 5.31 | 3625162-54 @ 16" SPACE |
| 5.32 | (4) #10-16 S.D.T. SCREWS MIN. AS SHOW (TYP.) |
| 5.33 | (2) 1/4" Ø CONT. SCREW ANCHORS |
| 5.34 | SCHLUTER STRIP RENO-TK - 3/8" BR. NICKEL ANOD. ALUM. |
| 5.35 | 3/8" Ø BOLT |
| 5.36 | L3x2x1/4 ANGLE BRACE - COPE END & ATTACH TO EXIST. METAL DECK W/ 3/8" Ø THRU BOLT - SNUG TIGHTEN |
| 5.37 | L3x2x1/4 ANGLE @ 48" SPA. - SPAN BETWEEN BOLT, CHORD OF EXIST. JOIST FRAMING AND ATTACH W/ 3/8" Ø BOLT AS SHOWN SNUG TIGHT (TYP.) |
| 5.38 | 3625162-54 CONT. ATTACH TO EXIST. BEAM W/ (3) #10-16 S.D.T. SCREWS |
| 5.39 | P1000 UNISTRUT - 6'-0" LONG W/ ALL THREAD, WASHERS, NUTS, AND UNISTRUT SPRING NUTS |
| 5.40 | 15"H x 31"W x 10-1/4"D - METAL BOX PROVIDED BY OWNERS VENDOR |
| 5.41 | STYLMARK J-MOLD #420068 - 12 FT STOCK LENGTH |
| 5.42 | STYLMARK 135° COLUMN TRIM #120066 - 12 FT LENGTH |
| 5.43 | STYLMARK HEADER #110360 (12 FT) & ENDCAP #410412 |
| 5.44 | STYLMARK WALLMARKER 6" SILL #110481 (12 FT) |
| 5.45 | STYLMARK 90° COLUMN TRIM #120058 - 12 FT LENGTH |
| 5.46 | STYLMARK J-MOLD #420107 - 12FT LENGHT |
| 5.47 | 6"X20 GA TRACK W/ 1 5/8" FLANGE |
| 5.48 | 1/4x1/8 DIVIDER |
| 5.49 | 6" STRUCTURAL STEEL METAL STUD |
| 5.50 | METAL SHOE TO SUPPORT PANELS |
| 5.51 | DOUBLE "C" JOIST HEAD, 4x12 GA. |
| 5.52 | STYLMARK ANCHOR FOR SILL #110358 - 12 FT LENGHT |
| 5.53 | STYLMARK WALL MAKER SILL ENDCAP #410545 |
| 6.0 | CARPENTRY |
| 6.1 | FIRE TREATED WOOD BLOCKING BY G.C. |
| 6.2 | 3/4" FIRE TREATED PLYWOOD |
| 6.3 | 5/8" FIRE TREATED AB PLYWOOD INSTALLED IN METAL STOREFRAME SYSTEM PAINTED BLACK BOTH SIDES |
| 6.4 | FIRE TREATED WOOD DOOR HEADER FRAMING |
| 6.5 | 1" X 10" WOOD VENEER STOREFRONT BROW |
| 6.6 | 1/2" FIRE TREATED PLYWOOD W/NON-ABRASIVE 1/4" CUSHION BACKING |
| 6.7 | 1/2" x 4" APPLIED WOOD BASE AS SPECIFIED |
| 6.8 | 1/2" FIRE TREATED PLYWOOD APPLIED TO STUDS |
| 6.9 | 2x6 FIRE TREATED WOOD FRAMING |
| 6.10 | 2x8 FIRE TREATED DOUBLE STUD |
| 6.11 | FIRE TREATED WOOD BLOCKING |
| 6.12 | 1/2"x1 1/2" HARD WOOD MOLDING |
| 6.13 | 3/4" HDWD. FRAME W/ 1/2"x1-1/2" STOP, PAINT TO MATCH ADJ. SURFACE. |
| 6.14 | 1x4 WOOD TRIM PIECE |
| 7.0 | THERMAL & MOISTURE PROTECTION |
| 7.1 | 4 MIL. TRANSLUCENT POLY SECURED TO KICKERS |
| 7.2 | 4 MIL. TRANSLUCENT POLY TO COVER EXISTING MALL TILE |
| 7.3 | NOT USED |
| 7.4 | NOT USED |
| 7.5 | NOT USED |
| 8.0 | DOORS & WINDOWS |
| 8.1 | 1/2" TEMPERED CLEAR GLAZING |
| 8.2 | 1/2" TEMPERED CLEAR GLAZING |
| 8.3 | TUBELITE LC LIGHT CHAMPAGNE CLASS 1 ANODIZE STOREFRONT SERIES W/ POCKET ADAPTOR 451VG030 |
| 8.4 | CENTER LINE OF HORIZONTAL SLIDING GRILL |
| 8.5 | OVERHEAD GRILLE MOTOR |
| 8.6 | OVERHEAD GRILLE AND TUBE STEEL SUPPORT |
| 8.7 | HOLLOW METAL DOOR FRAME |
| 8.8 | GPDR, SECURITY GRILLE ACCESS BY FIXTURE CONTR. |
| 9.0 | FINISHES |
| 9.1 | 1/2" GYP BD |
| 9.2 | 5/8" GYP BD |
| 9.3 | 5/8" TYPE "X" GYP BD (COMPLIES W/ ASTM C36) |
| 9.4 | EXISTING MALL TILE TO REMAIN |
| 9.5 | EXISTING MALL BULKHEAD TO REMAIN |
| 9.6 | 6" WIDE "STAY LONG TAPE" (BLUE) INSTALLED AT LEASE LINE |
| 9.7 | EXISTING MALL FLOOR SLAB TO REMAIN |
| 9.8 | PLASTIC LAMINATE APPLIED TO 5/8" FIRE TREATED PLYWOOD |
| 9.9 | 1" X 2 1/4" VERTICAL UPRIGHT FINS WITH WD-1 |
| 9.10 | LAY-IN ACT AND GRID AS SPECIFIED |
| 9.11 | INTERIOR BATT INSULATION FOR SOUND ABSORPTION |
| 9.12 | 1" X 1 1/2" VERTICAL UPRIGHT FINS PL-1 |
| 9.13 | CURVED CUSTOM METAL PATTERNED PANELS MOUNTED ON ACRYLIC BACKER PANEL |
| 9.14 | FABRIC DRAPERY AS SPECIFIED |
| 9.15 | MALL FACING FINS; 1" X 2 1/2" INTERIOR VERTICAL UPRIGHTS WITH PLASTIC LAMINATE |
| 9.16 | STOREFRONT SALES AREA FACING FINS; 1" X 2 1/8" |
| 9.17 | 1/2" CEMENT BOARD |
| 9.18 | SEALANT & BACKER ROD |
| 9.19 | STOREFRONT TILE |
| 9.20 | 5/8" METAL J TRIM |
| 9.21 | 14 GA. CLIP ANGLE |
| 9.22 | 3 5/8" LIGHT GA BUILT UP COLUMN |
| 10.0 | SPECIALTIES |
| 10.1 | CIRCULAR LOUVRES - LESLIE LOCKE 2"DIA. - #RLSC2 |
| 10.2 | GRAB BAR - BRADLEY 1 1/4"DIA.x36" SATIN FINISH - 8322-00136 |
| 10.3 | GRAB BAR - BRADLEY 1 1/4"DIA.x42" SATIN FINISH - 8322-00142 |
| 10.4 | WELDED-FRAME MIRROR -BOBRICK 18" W x 30"H - #B-293 1830 |
| 10.5 | PAPER TOWEL DISPENSER - BRADLEY SURFACE MOUNTED 10 13/16"Wx14 1/16"Hx3 15/16"D - B-262 |
| 10.6 | DOUBLE-ROLL TOILET PAPER DISPENSER - BOBRICK SURFACE MOUNTED - B-2740 |
| 10.7 | SANITARY NAPKIN DISPOSAL-BOBRICK SURFACE MOUNTED 7 1/2"Wx10"Hx1-11/16" 7 1/2"Wx10"Hx1-11/16" - B-270 |
| 10.8 | SOAP DISPENSER - BRADLEY 24 FL. OZ. -6501 |
| 10.9 | TOWEL DISPENSER - BOBRICK B-253 |
| 10.10 | GRAB BAR - BRADLEY 1 1/4"DIA.x18" SATIN FINISH - 8322-00118 |
| 10.11 | HELZBERG SIGNAGE - RE: SIGN DRAWINGS |
| 10.12 | LED STRIP LIGHTING AS SPECIFIED W/ REMOTE TRANSFORMERS LOCATED ABOVE LAY-IN CEILING. NOT TO EXCEED 20' BETWEEN TRANSFORMER |
| 10.13 | EXISTING MALL TILE TO REMAIN |
| 10.14 | FOLDING SECURITY GRILLE WITH RECESSED TRACK |
| 10.15 | DRAPERY TRACK |
| 10.16 | EXISTING MALL STRUCTURE TO REMAIN |
| 10.17 | MALL NEUTRAL PIER |
| 10.18 | TOILET PAPER DISPENSER - BRADLEY SURFACE MOUNTED SINGLE ROLL - 5084 |
| 10.25 | FULL LENGTH MIRROR: BOBRICK - 60"x20", B-290 2060 |
| 11.0 | EQUIPMENT |
| 15.0 | MECHANICAL (REFERENCE MECHANICAL DRAWINGS) |
| 16.0 | ELECTRICAL (REFERENCE ELECTRICAL DRAWINGS) |
| 16.1 | SECURITY EQUIPMENT |

hcKloverarchitect
8813 PENROSE LANE, SUITE 400 • LENEXA, KS 66219
ph: 913.649.8181 • fx: 913.649.1275 • www.klover.net

THIS DRAWING has been prepared by the Architect, or prepared under his direct supervision as an instrument of service and is intended for use only on this project. All Drawings, Specifications, ideas and designs, including the overall layout, form, arrangement, and composition of spaces and elements portrayed, constitute the original, unpublished Work of the Architect. Any reproduction, use, or disclosure of the information contained herein without the written consent of the Architect is strictly prohibited.

© 2019 H.C. KLOVER ARCHITECT

THE ARCHITECT DISCLAIMS responsibility for the existing building structure, site conditions, existing construction elements, or any documents, drawings or other instruments used for any part of this Project which do not bear the Architect's seal. The Architect's services are undertaken only in the interest of the Project Owner. No obligation is assumed by the Architect for the benefit of any other entity.

RELATED DOCUMENTS: This Drawing is a single component of an integrated set of Construction Documents. General and Supplementary Conditions of the Contract, General Requirements, Specifications and other Drawings may affect the Work described. Failure to review and integrate the design intent of the whole of the Construction Documents does not relieve the Contractor from providing a complete Project.

COMPLY WITH all laws, codes, ordinances and regulations with authorities having jurisdiction and with requirements of the Landlord, if applicable. Do not start Work until all permits and required approvals are obtained.

VERIFY ACTUAL CONDITIONS and dimensions prior to construction. Commencement of work constitutes verification and acceptance of all existing conditions. Application of a material or equipment item to Work installed by others constitutes acceptance of that Work, and assumption of responsibility for satisfactory installation.

DIMENSIONS SHOWN are to finish face of a material unless otherwise indicated.

CONTRACTOR'S NOTES: Written dimensions hold preference over scaled dimensions. Do not scale the drawings. The contractors must visit job site to verify all existing conditions and dimensions before submitting bids. Report any discrepancies of any conditions which may interfere with the proper execution of the contract to the tenant's representative. Report discrepancies during bidding process and before start of construction. Change orders will not be approved for issues arising from the field conditions or conflicts between the plans and the existing conditions.

**projecttitle**

**HELZBERG DIAMONDS**
STORE 211, NG-M
MALL OF GEORGIA
3333 BUFORD DR, 2070C
BUFORD, GEORGIA 30519

**projectnumber**
19007.019

**drawingissuance**
OWNER/PERMIT/BID 1.7.20

**drawingrevisions**

| △ | Date: | Description: |
|---|---|---|
| | | |

**professionalseal**

**drawingtitle**
INTERIOR ELEVATIONS

**drawingnumber**
**A500**