Digitally signed by Virginia G Hart
Virginia G Hart Date: 2020.01.07 15:15:00-06'00'

GENERAL NOTES:

1. SEE SHEET N1 FOR ALL CLEARANCE REQUIREMENTS AND MOUNTING HEIGHTS FOR ACCESSORIES
2. INSTALL WOOD BLOCKING AS REQUIRED FOR MOUNTING ACCESSORIES
3. COUNTERSINK ALL CABINET MOUNTING SCREWS

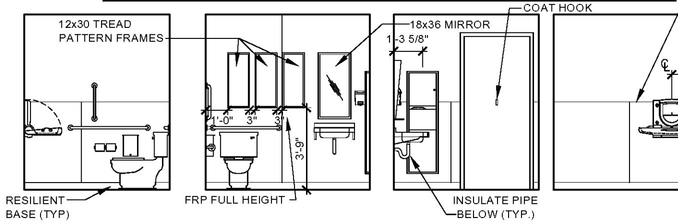

1 A7 INTERIOR ELEVATIONS
SCALE:1/4"=1'-0"

GENERAL NOTES:

1. SEE SHEET N1 FOR ALL CLEARANCE REQUIREMENTS AND MOUNTING HEIGHTS FOR ACCESSORIES
2. INSTALL WOOD BLOCKING AS REQUIRED FOR MOUNTING ACCESSORIES
3. COUNTERSINK ALL CABINET MOUNTING SCREWS

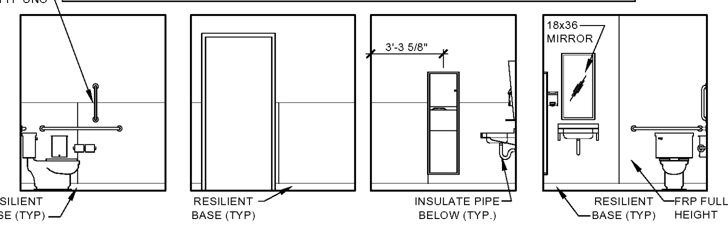

3 A7 INTERIOR ELEVATIONS
SCALE:1/4"=1'-0"

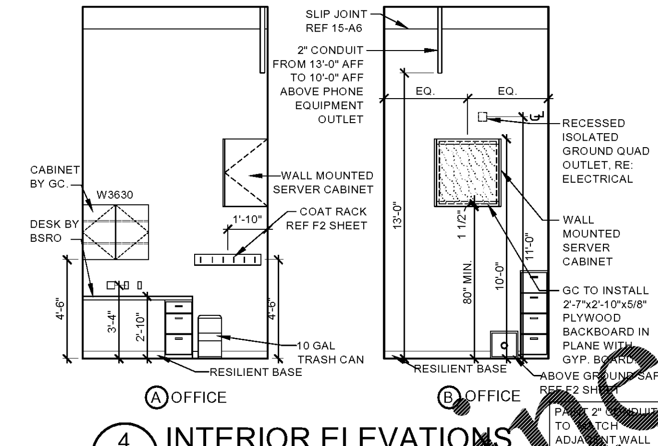

4 A7 INTERIOR ELEVATIONS
SCALE:1/4"=1'-0"

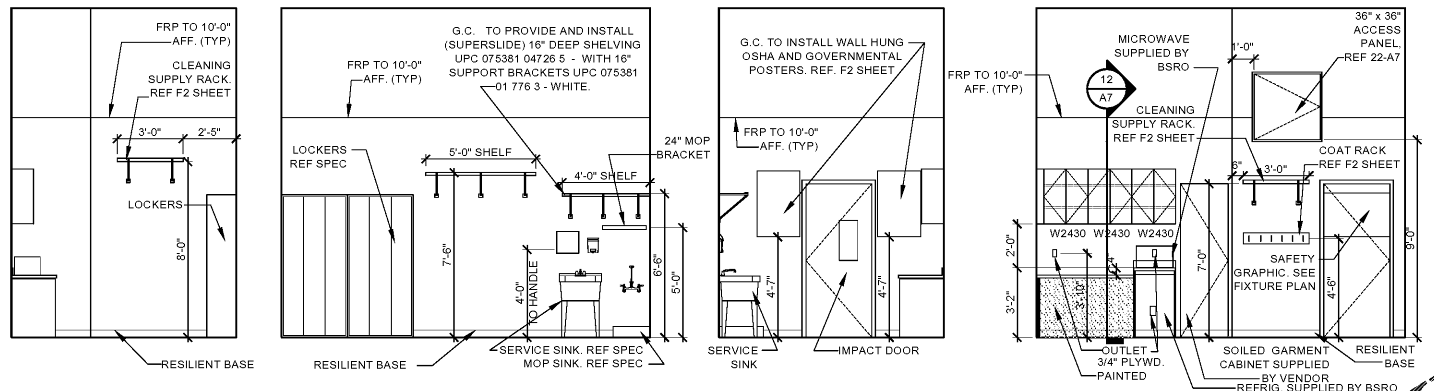

6 A7 INTERIOR ELEVATIONS
SCALE:1/4"=1'-0"

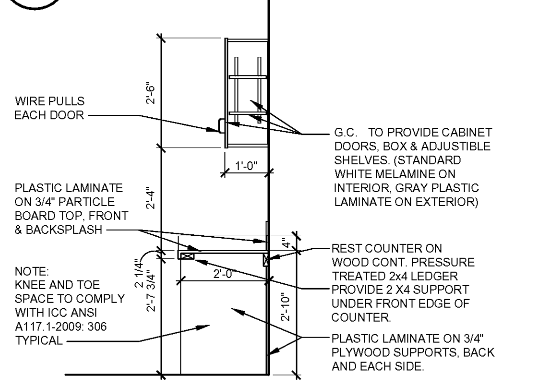

NOTE: CABINETS AND COUNTER TOPS TO BE FURNISHED AND INSTALLED BY CONTRACTOR. USE STANDARD GRADE STOCK CABINETS AND COUNTER TOPS AVAILABE THRU LOCAL RETAIL HOME CENTER. USE GRAY PLASTIC LAMINATE PER SPECIFICATIONS.

12 A7 CABINET SECTION
SCALE:1/2"=1'-0"

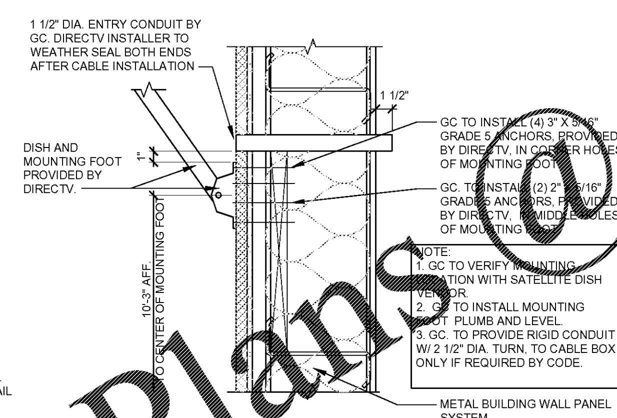

14 A7 SATELLITE MOUNTING DETAIL
SCALE:1 1/2"=1'-0"

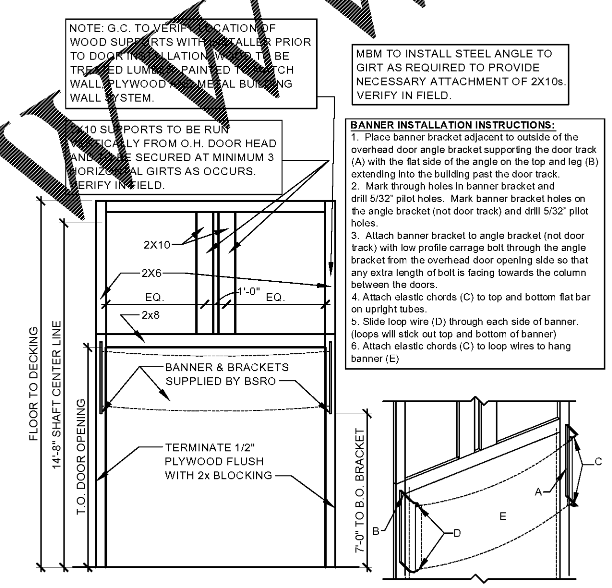

BANNER INSTALLATION INSTRUCTIONS:

1. Place banner bracket adjacent to outside of the overhead door angle bracket supporting the door track (A) with the flat side of the angle on the top and leg (B) extending into the building past the door track.
2. Mark through holes in banner bracket and drill 5/32" pilot holes. Mark banner bracket holes on the angle bracket (not door track) and drill 5/32" pilot holes.
3. Attach banner bracket to angle bracket (not door track) with low profile carrage bolt through the angle bracket from the overhead door opening side so that any extra length of bolt is facing towards the column between the doors.
4. Attach elastic chords (C) to top and bottom flat bar on upright tubes.
5. Slide loop wire (D) through each side of banner. (loops will stick out top and bottom of banner)
6. Attach elastic chords (C) to loop wires to hang banner (E)

15 A7 OH DOOR SUPPORT DETAIL
SCALE:1/4"=1'-0"

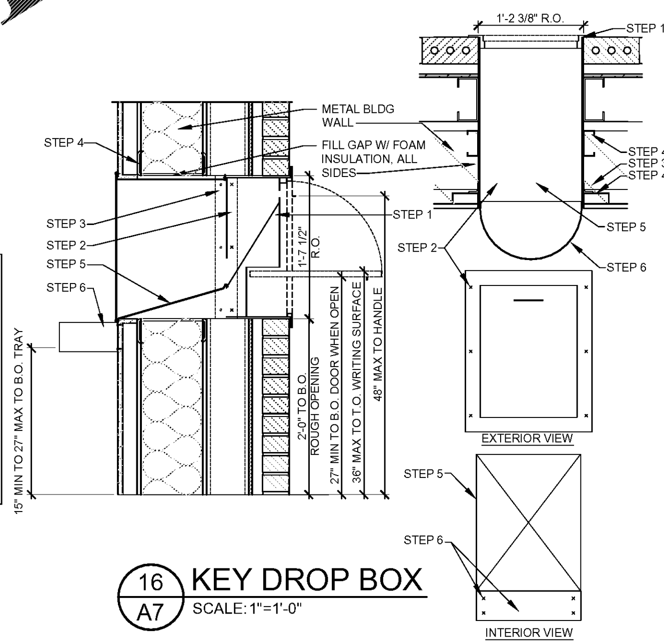

REQUEST UNIT EXTENSION FROM MANUFACTURER FOR INCREASED WALL THICKNESS. VERIFY SCREWS DO NOT EXTEND TOWARD PUBLIC

STEP 1:
PROVIDE OPENING IN METAL BUYILDING WALL PANEL. VERIFY SIZE WITH UNIT SHIPPED.

STEP 2:
INSERT UNIT INTO OPENING, MARK (6) MOUNTING HOLE LOCATIONS & INSTALL 1/4" LAG SHIELDS (NOT INCLUDED). BOLT UNIT TO BUILDING W/ 1/4"x1 1/2" LAG BOLTS (NOT INCLUDED) CAULK AROUND TOP SIDES OF UNITS ONLY.

STEP 3:
SECURE MOUNTING ANGLES TO INSIDE OF BUILDING WALL, USING LARGE HOLES W (6) 1/4" LAG SHIELDS & 1/4"x 1-1/2" LAG BOLTS. (NOT INCLUDED) USING SMALL HOLES IN MOUNTING ANGLES AS TEMPLATE, DRILL .128" DIA. (#30) HOLES IN UNIT & SECURE ANGLES TO UNIT W (6) #10x1/2" SHEET METAL SCREWS

STEP 4:
INSTALL METAL STUDS @ PERIMETER OF BOX OPENING @ INTERIOR WALL. USE J-CLIP TO ATTACH DRYWALL TO STUD @ OPENING.

STEP 5:
INSTALL SHEET METAL INSERT TO CLOSE GAP BETWEEN UNIT AND INTERIOR WALL OPENING. GRIND AND SMOOTH ALL EXPOSED EDGES. ENSURE THAT TRANSITION BETWEEN THE UNIT AND SHEET METAL INSERT IS A SMOOTH AND CONSISTENT EDGE.

STEP 6:
ATTACH TRAY TO INTERIOR WALL W/ (4) #10 X 1/2" SHEET METAL SCREWS

16 A7 KEY DROP BOX
SCALE:1"=1'-0"

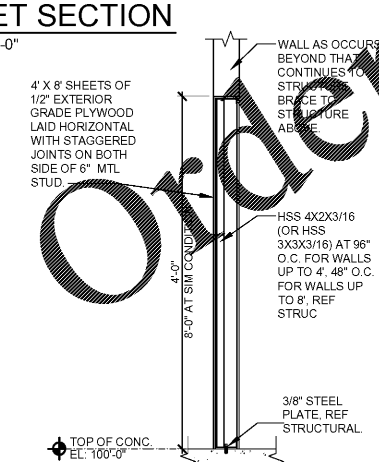

20 A7 PARTIAL HEIGHT WALL SECTION
SCALE:1/2"=1'-0"

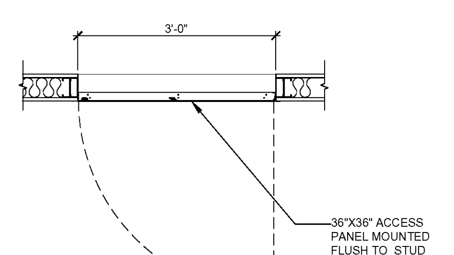

22 A7 ACCESS PANEL DETAIL
SCALE:3/4"=1'-0"

INTERIOR NON-LOAD BRG PARTITION HEADER SCHEDULE		
HEADER LENGTH	HEADER MEMBERS	MINIMUM EFFECTIVE PROPERTIES PER STUD
2' TO 6'	(2) 6" x 18 GAUGE	Ix = 2.042 Sx = 0.670
6' TO 8'	(2) 6" x 16 GAUGE	Ix = 2.518 Sx = 0.839
8' TO 10'	(2) 6" x 14 GAUGE	Ix = 3.094 Sx = 1.031

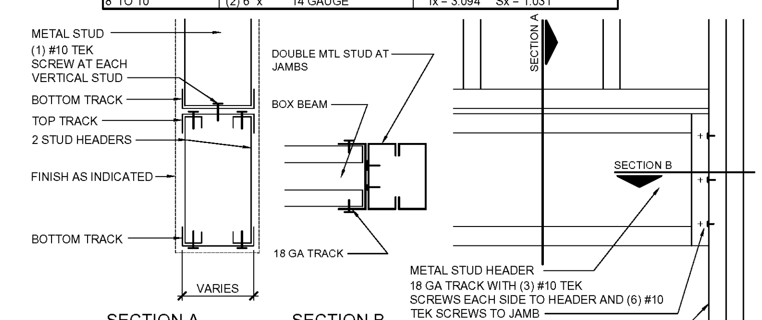

23 A7 HEADER CONNECTION DETAIL
SCALE:1 1/2"=1'-0"

SGA Design Group, P.C.
1437 South Boulder, Suite 550
Tulsa, Oklahoma 74119.3609
p: 918.587.8600
f: 918.587.8601
www.sgadesigngroup.com

Firestone since 1926 COMPLETE AUTO CARE™

THIS DRAWING IS THE PROPERTY OF BRIDGESTONE RETAIL OPERATIONS, LLC AND IS LOANED ON THE EXPRESS CONDITION THAT IT IS NOT TO BE USED IN ANY WAY DELETERIOUS TO THE INTERESTS OF BRIDGESTONE RETAIL OPERATIONS, LLC. THE ACCEPTANCE OF THIS DRAWING WILL BE CONSTRUED AS AN ACCEPTANCE OF THE FOREGOING CONDITION AND AS ADMISSION TO THE EXCLUSIVE OWNERSHIP IN AND TO THE DRAWING BY BRIDGESTONE RETAIL OPERATIONS, LLC.

STIPULATION OF REUSE
THIS DRAWING WAS PREPARED FOR USE ON A SPECIFIC SITE AT SUMMERVILLE, SC CONTEMPORANEOUSLY WITH ITS ISSUE DATE ON 12/20/2019 AND IT IS NOT SUITABLE FOR USE ON A DIFFERENT PROJECT SITE OR AT A LATER TIME. USE OF THIS DRAWING FOR REFERENCE OR EXAMPLE ON ANOTHER PROJECT REQUIRES THE SERVICES OF PROPERLY LICENSED ARCHITECTS AND ENGINEERS. REPRODUCTION OF THIS DRAWING FOR REUSE ON ANOTHER PROJECT IS NOT AUTHORIZED AND MAY BE CONTRARY TO THE LAW.

NEW FCAC STORE
2020 ER
1762 STATE RD
SUMMERVILLE, SC

STATE OF SOUTH CAROLINA — SGA DESIGN GROUP, P.C. — Tulsa, OK 97042 — REGISTERED ARCHITECTS

STATE OF SOUTH CAROLINA — VIRGINIA GAYLE HART — TULSA, OK 10230 — REGISTERED ARCHITECT

01/07/2020

ISSUE BLOCK

1	01/06/20	REV #1

PROPERTY NO.:	317910
6 DIGIT NO.:	799862
4 DIGIT NO.:	013K
AOR PROJECT NUMBER:	1955B67
TO PERMIT: DATE:	12-20-19
TO BID: DATE:	##-##-##
KMP	

SHEET TITLE:
INTERIOR ELEVS, SECTIONS & DETAILS

SHEET NUMBER:
A7

Order Plans @ WWW.LDILine.com