PLUMBING SPECIFICATIONS

1.0 GENERAL:

1.1 PROVIDE ALL WORK, EQUIPMENT, SERVICES, LABOR, AND MATERIALS NECESSARY FOR THE CONSTRUCTION OF NEW PLUMBING SYSTEMS AS DESCRIBED OR IMPLIED BY THE CONTRACT DOCUMENTS.

1.2 THE DRAWINGS ARE DIAGRAMMATIC AND ARE NOT INTENDED TO INCLUDE EVERY DETAIL OF CONSTRUCTION, MATERIALS, AND EQUIPMENT. TAKE ACTUAL FIELD MEASUREMENTS AT THE JOB SITE IN LIEU OF SCALING THE DRAWINGS.

1.3 REVIEW THE CONTRACT DOCUMENTS OF ALL TRADES AND COORDINATE ALL WORK WITH OTHER TRADES AS NECESSARY TO AVOID CONFLICTS AND INTERFERENCES.

1.4 VISIT THE PROJECT SITE AND BECOME THOROUGHLY FAMILIAR WITH ALL EXISTING FIELD CONDITIONS.

1.5 ALL WORK AND MATERIALS SHALL COMPLY WITH APPLICABLE STATE, LOCAL, AND NATIONAL CODES (INCLUDING OSHA). AND IN COMPLIANCE WITH THE LATEST EDITION OF THE BUILDING CODE. THESE PLANS AND SPECIFICATIONS SHALL BE THE ABSOLUTE MINIMUM STANDARD OF ACCEPTANCE.

1.6 OBTAIN AND PAY FOR ANY AND ALL REQUIRED PERMITS, INSPECTIONS, CERTIFICATES OF INSPECTIONS AND APPROVAL.

1.7 LOCATIONS SHOWN FOR EQUIPMENT, PIPING, VALVES, DEVICES, ETC., ARE DIAGRAMMATIC. ADJUSTMENTS IN THESE LOCATIONS SHALL BE MADE BY THE CONTRACTOR TO FULLY COORDINATE THE WORK OF ALL TRADES AND EXISTING CONDITIONS.

1.8 PROVIDE ONLY NEW MATERIALS AND EQUIPMENT LISTED AND LABELED (FOR THE USE INTENDED) BY AN APPROVED THIRD PART LABORATORY SERVICE SUCH AS UNDERWRITER'S LABORATORIES, INC.

1.9 TESTING SHALL COMPLY WITH ALL LOCAL AND STATE STANDARDS AND NATIONAL CODES.

1.10 SEALANT SHALL BE USED TO SEAL ALL WALL AND FLOOR PENETRATIONS.

1.11 FIRE-STOPPING SEALANT SHALL BE USED TO SEAL ALL FIRE RATED WALL AND FLOOR PENETRATIONS.

1.12 FIXTURES REFERENCED AS ADA OR HANDICAP SHALL BE INSTALLED PER HANDICAP CODES.

1.13 ALL PIPING PENETRATIONS THROUGH NON-RATED WALLS SHALL BE SEALED TO PREVENT SOUND TRANSFER.

1.14 IN THE EVENT THE CONTRACTOR CHOOSES TO USE PRODUCTS OTHER THAN THE BASIS OF DESIGN. HE ASSUMES FULL RESPONSIBILITY FOR COORDINATION AND INTEGRATION OF SUCH ITEMS. THE FUNCTIONAL DESIGN INTEGRITY OF ALL SYSTEMS AND COMPONENTS SHALL BE MAINTAINED. VOLTAGES, LOADS, WIRE SIZES AND QUANTITIES, DISCONNECT SWITCHES AND FUSE SIZES, PHYSICAL SIZE, LOCATIONS, CLEARANCES, ETC. SHALL BE FULLY COORDINATED BY THE CONTRACTOR AND SHALL BE HIS RESPONSIBILITY. ANY ADDITIONAL COST RESULTING FROM SAID SUBSTITUTION SHALL BE THE SOLE RESPONSIBILITY OF THE CONTRACTOR.

2.0 PIPING AND PIPE FITTINGS:

2.1 WATER PIPING SHALL BE TYPE L HARD COPPER ASTM B-88 WITH WROUGHT SOLDER FITTINGS CONFORMING TO ANSI B16.22. SOLDER SHALL BE 95-5. JOINTS SHALL BE MADE WITH SOLDER UP TO 1 1/4". JOINTS OVER 1 1/4" SHALL BE JOINED BY SILVER BRAZING ABOVE 1000 DEGREE MELTING POINT.

2.2 INSULATE HOT AND COLD WATER, VERTICAL RUNS OF STORM DRAIN PIPING UP TO AND INCLUDING ROOF DRAIN BODIES, AND HORIZONTAL RUNS OF STORM DRAIN PIPING TO POINT TURNING DOWN IN WALL. PROVIDE AND INSTALL 1" THICK(MINERAL FIBER) FIBERGLASS WITH ASJ JACKET IN CONCEALED LOCATIONS AND ON ALL EXPOSED PIPING. INSTALLATION TO INCLUDE MOLDED ELBOWS AND TEE'S. INSULATION SHALL BE INSTALLED BY EXPERIENCED INSULATION CONTRACTOR AND NOT PLUMBING CONTRACTOR.

2.3 WATER PIPING WITHIN BLOCK WALLS – INSULATE ALL HOT AND COLD WATER PIPING WITH 1" THICK ARMACELL LAPSEAL BLACK FLEXIBLE ELASTOMERIC THERMAL INSULATION WITH BOTH A MOISTURE SEAL AND A REINFORCED ELASTIC FOAM LAP SEAL OR EQUAL PRODUCT. POLYOLEFIN/POLYETHYLENE THERMAL INSULATION SHALL NOT BE ACCEPTED.

2.4 SANITARY AND STORM WASTE PIPING – PIPING BELOW SLAB SHALL BE SCHEDULE 40 PVC DWV SOLID CORE BELL AND SPIGOT WITH SOLVENT CEMENTED JOINTS TO MEET NCPC WITH TRACE WIRE AS DETAILED. FOAM PIPING SHALL NOT BE ALLOWED. FITTINGS SHALL BE MANUFACTURED FROM VIRGIN RIGID PVC WITH A CELL CLASS OF 12454 PER ASTM F 1760. ALL PIPING ABOVE SLAB SHALL BE CAST IRON HUBLESS PIPE AND FITTINGS MEETING ASTM A 888 OR CISPI 301, COATED FOR GENERAL DUTY. ALL BANDS SHALL BE HEAVY DUTY, TYPE 304 STAINLESS STEEL COUPLINGS CONSISTING OF ASTM C1540 TYPE 304 STAINLESS STEEL SHIELD, STAINLESS STEEL BANDS AND SLEEVE.

2.5 SERVICE VALVES SHALL BE APOLLO 2 PIECE, FULL PORT, BALL VALVES, 125PSI WSP EXTENDED STEM FOR INSULATION.

2.6 SWING CHECK VALVES SHALL BE APOLLO, MSS SP-85, CLASS 125, CAST LEAD FREE BRONZE BODY AND CAP CONFORMING TO ASTM B 62, WITH HORIZONTAL SWING, Y PATTERN, AND BRONZE DISK. CHECK VALVES INSTALLED IN VERTICAL POSITION SHALL BE SPRING LOADED INLINE TYPE.

2.7 SHOCK ARRESTORS – PROVIDE AND INSTALL PRODUCT EQUAL TO PPP TYPE "L" COPPER TUBE WATER HAMMER ARRESTOR.

2.8 PIPE THERMOMETERS SHALL BE WEKSLER GLASS THERMOMETER CORPORATION SOLAR DIGITAL INDUSTRIAL THERMOMETER MODEL AAD. THERMOMETERS SHALL HAVE DISPLAY WITH MINIMUM 1/2" LCD BLACK CHARACTERS WITH GRAY BACKGROUND, TEMPERATURE RANGE OF -58° TO 302° F, AND BIDIRECTIONAL SOLAR PANELS.

2.9 PIPE HANGERS SHALL BE TYPE CLEVIS TYPE WITH SADDLES FOR INSULATED PIPING. HANGER ROD SHALL BE CADMIUM PLATED OR GALVANIZED.

2.10 PRESSURE TEST ALL PIPING. WATER PIPING SHALL BE TESTED AT 150 PSI FOR MINIMUM 2 HOURS. SEWER PIPING SHALL BE TESTED ACCORDING NCPC AT MINIMUM 10 FOOT WATER COLUMN. TEST RESULTS SHALL DEMONSTRATE NO LEAKS OR APPRECIABLE LOSS OF PRESSURE. REPAIR OR REPLACE DEFECTIVE PIPING UNTIL TESTS ARE ACCOMPLISHED SUCCESSFULLY.

2.11 INSTALL PIPE LABELS ON PIPING SPACED AT INTERVALS OF NOT MORE THAN 10 FEET APART AND AT LEAST ONCE IN EACH ROOM TRAVERSED BY THE PIPING SYSTEM.

2.12 ALL WATER PIPING MUST BE FLUSHED, CLEANED AND DISINFECTED AS FOLLOWS:

1. PURGE ALL PIPING BEFORE USING.

2. USE PURGING AND DISINFECTING PROCEDURES PRESCRIBED BY AUTHORITIES HAVING JURISDICTION; IF METHODS ARE NOT PRESCRIBED, USE PROCEDURES DESCRIBED IN EITHER AWWA C651 OR AWWA C652 OR FOLLOW PROCEDURES DESCRIBED BELOW:

A. FLUSH PIPING SYSTEM WITH CLEAN, POTABLE WATER UNTIL DIRTY WATER DOES NOT APPEAR AT OUTLETS.

B. FILL AND ISOLATE SYSTEM ACCORDING TO EITHER OF THE FOLLOWING:

1. FILL SYSTEM OR PART THEREOF WITH WATER/CHLORINE SOLUTION WITH AT LEAST 50 PPM OF CHLORINE. ISOLATE WITH VALVES AND ALLOW TO STAND FOR 24 HOURS.

2. FILL SYSTEM OR PART THEREOF WITH WATER/CHLORINE SOLUTION WITH AT LEAST 200 PPM OF CHLORINE. ISOLATE AND ALLOW TO STAND FOR THREE HOURS.

C. FLUSH SYSTEM WITH CLEAN, POTABLE WATER UNTIL NO CHLORINE IS IN WATER COMING FROM SYSTEM AFTER THE STANDING TIME.

3. CONTRACTOR SHALL RETAIN AN INDEPENDENT LABORATORY TO CONDUCT BACTERIOLOGICAL AND POST-CHLORINATION TEST CERTIFYING THAT THE WATER MEETS EPA QUALITY FOR DRINKING WATER. PREPARE AND SUBMIT TEST REPORTS OF PURGING AND DISINFECTING ACTIVITIES TO THE ENGINEER OF RECORD. CONTRACTOR SHALL PERFORM A MINIMUM OF (2) WATER TEST PRIOR TO STARTING DEMOLITION WORK IN ORDER TO DETERMINE A BASE LINE OF WATER QUALITY.

3.0 CLOSEOUT DOCUMENTS

3.1 PROVIDE OWNER WITH ELECTRONIC COPIES OF MAINTENANCE AND REPAIR MANUALS FOR ALL EQUIPMENT.

PLUMBING FIXTURES SPECIFICATIONS:

FIXTURE MANUFACTURERS:

1. FIXTURES
   A. KOHLER
   B. SLOAN
   C. AMERICAN STANDARD
2. FIXTURE SEATS
   A. BEMIS
   B. CHURCH
   C. OLSONITE
3. FAUCETS
   A. DELTA
   B. CHICAGO
   C. T & S BRASS
4. FIXTURE SUPPORTS
   A. SMITH
   B. ZURN
   C. JOSAM
5. ELECTRIC WATER COOLERS
   A. ELKAY
   B. HALSEY TAYLOR
   C. SUNROC
6. SINKS
   A. ELKAY
   B. JUST
   C. ADVANCE TABCO
7. HYDRANTS / HOSE BIBBS
   A. SMITH
   B. ZURN
   C. PRIER
   D. WOODFORD

P-1 WATER CLOSET: ADA COMPLIANT, WHITE VITREOUS CHINA, FLOOR MOUNTED, FLUSH TANK TYPE, ELONGATED BOWL, SIPHON JET ACTION, 1.6 GALLON FLUSH, 16 1/2" BOWL HEIGHT, AMERICAN STANDARD CHAMPION PRO MODEL 211AA.004 WITH FLOAT VALVE AND FILL VALVE. PROVIDE WITH BEMIS 1955SSCT COMMERCIAL TOILET SEAT WITH STAINLESS STEEL CHECK HINGES, MCGUIRE BV166 CLOSET STOP AND CHROMED COPPER SUPPLY TUBE, WAXED SEAL, TOILET BOLTS AND BOLT CAPS. INSTALL TO COMPLY WITH THE REQUIREMENTS OF ADA.

P-2 LAVATORY: ADA COMPLIANT WALL HUNG TYPE (20" X 18"), WHITE, VITREOUS CHINA WITH 4" FAUCET CENTERS, KOHLER KINGSTON MODEL K-2007-4. PROVIDE AND INSTALL DELTA MODEL 501LF-HDF SINGLE HANDLE FAUCET, CAST BRASS, WITH 4" CENTERSET AND 1.5 GPM VANDAL RESISTANT AERATOR. INCLUDE MCGUIRE 8902 (1 1/4" X 1 1/2") P-TRAP AND WALL BEND, MCGUIRE NO. BV2165 BALL VALVE ANGLE STOPS AND CHROMED COPPER FLEXIBLE RISERS. MCGUIRE 155A GRID STRAINER AND 1 1/4" TAILPIECE. INSTALL WHITE PRE-MOLDED ANTIMICROBIAL VINYL INSULATION KIT ON TAILPIECE, P-TRAP, AND SUPPLIES. MOUNT LAVATORY AT 34 INCHES TO LIP. INSTALL WITH CARRIER CONSISTING OF TOP SUPPORT PLATE, RECTANGULAR STEEL UPRIGHTS WITH WELDED FEET ANCHORED TO CONCRETE, ADJUSTABLE SUPPORT PLATE, AND MOUNTING FASTENERS.

P-3 SINK: ELKAY MODEL LR-1918 (19" X 18" X 7 5/8"), SINGLE BOWL, 18 GAUGE TYPE 304 STAINLESS STEEL WITH MODIFIED DRAIN IN REAR CENTER, SELF RIMMING LIP WITH UNDERCOATING, LK-35 STRAINER BASKET WITH CHROME BRASS DRAIN AND 1 1/2" TAILPIECE, McGUIRE 8912 (1 1/2" X 1 1/2") P-TRAP AND WALL BEND, McGUIRE NO. LFBV2165 CHROME PLATED BALL VALVE ANGLE STOPS AND COPPER RISERS, DELTA 100LF-HDF SINGLE HANDLE FAUCET WITH 2.0 GPM AERATOR.

P-4 ELECTRIC WATER COOLER: TWO LEVEL, ADA COMPLIANT ELKAY MODEL NO. EZSTL8WS BARRIER-FREE, BI-LEVEL DESIGN WITH EZH20 BOTTLE FILLING STATION, 8.0 GPH CAPACITY @ 50 DEGREES, FRONT AND SIDE CONTROLS, STAINLESS STEEL BASIN, GRAY GRANITE CABINET, WALL MOUNTED WITH EMBOSSED BUBBLER PAD, AND ABRASION RESISTANT FLEXI-GUARD SAFETY BUBBLER. BOTTLE FILLING UNIT SHALL INCLUDE AN ELECTRONIC SENSOR FOR TOUCHLESS ACTIVATION WITH AUTO 20 SECOND SHUT-OFF TIMER. PROVIDE McGUIRE 8902 1 1/4" CAST BRASS P-TRAP, McGUIRE BALL VALVE ANGLE SUPPLY STOP WITH CHROMED COPPER SUPPLY TUBE. MOUNT LOW BOWL AT 34" ABOVE FINISHED FLOOR.

P-5 MOP BASIN: FIAT MODEL MSBIDTG2424 (24" x 24" x 10") MOLDED STONE BASIN WITH MSG STAINLESS STEEL WALL GUARDS, T & S FAUCET MODEL NO. B-0665-BSTP WITH VACUUM BREAKER, INTEGRAL STOPS, PAIL HOOK AND 3/4" HOSE THREAD ON SPOUT. HOSE AND HOSE BRACKET MODEL NO. 832-AA, MOP HANGER MODEL NO. 889-CC. MOUNT MOP HANGER ON OPPOSITE WALL FROM FAUCET.

P-6 ICEMAKER BOX: GUY GRAY MODEL AB9700 HA ICEMAKER HOOK-UP WITH 1/2" INLET AND 1/4" OUTLET COMPRESSION ANGLE VALVE.

P-7 HOSE BIBB: WOODFORD FAUCET, MODEL 24 COMPLETE WITH VACUUM BREAKER, 3/4" HOSE THREADED OUTLET WITH LOCK SHIELD CAP AND "T" HANDLE.

P-8 ANTI-FREEZE HYDRANT (AFH): ANTI-FREEZE HYDRANT (AFH) SHALL BE ANTI-SIPHON, AUTOMATIC DRAINING, WALL HYDRANT COMPLETE WITH INTEGRAL BACKFLOW PREVENTER, BRASS FINISHED, STAINLESS STEEL COVER, NON- FREEZE TYPE WITH BRONZE CASING, STAINLESS STEEL STEM, ALL BRONZE INTERIOR PARTS EQUAL TO WOODFORD MODEL 68.

Order Plans @ WWW.LDILine.com

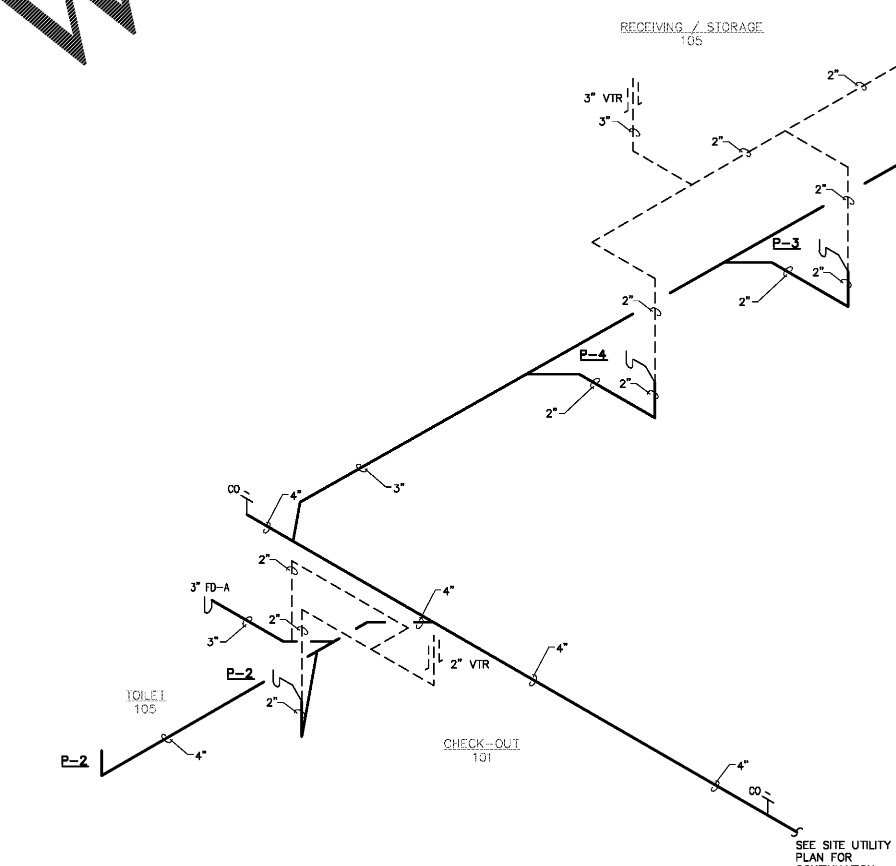

1 / P3.1 **Waste & Vent Riser Diagram**

SCALE: NONE

NORTH

These drawings are instruments of service and as such remain the property of the architect. No copies or reproductions of these drawings are permitted without the consent of the architect. Upon completion of the work all the drawings (except the contract copies) are to be returned to the architect.
Copyright © 2019

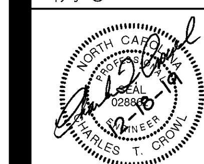

1920 Hwy. 54, Suite 700, Durham, NC 27713
Ph. 919-544-1936 · Fax 919-544-2540 · License: C-1813

RENOVATIONS TO :

ABC STORE

HOLLOWAY ST.
DURHAM,NC

PROJECT NUMBER
19-063

Plumbing Waste & Vent Riser Diagram - Notes and Specifications

DTW
Architects & Planners, Ltd.
229 North Gregson Street
Durham, NC 27701
919.317.4020

CONSTRUCTION DOCUMENTS

Revisions

Drawn	LDH
Checked	CTC
Date	12/18/2019
Sheet	P3.1
Of	

P:\PROJECTS\2019\19-063 ABC STORE -- HOLLOWAY ST\3.0 CAD\3.50 PLUMBING\P3.1.DWG PLOTTED 12/18/2019 1:32 PM BY: DARRIN HESTER