Order Plans @ WWW.LDIILine.com

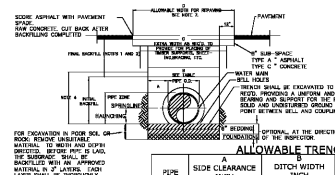

FOR EXCAVATION IN POOR SOIL OR ROCK: REMOVE UNSUITABLE MATERIAL TO WIDTH AND DEPTH DIRECTED. BEFORE PIPE IS LAID, THE SUBGRADE SHALL BE BACKFILLED WITH AN APPROVED MATERIAL IN 3" LAYERS. EACH LAYER SHALL BE THOROUGHLY TAMPED TO 95 % COMPACTION.

NOTES:
1. COMPACTION: BACKFILLS SHALL BE BUILT-UP IN LAYERS AND EACH LAYER SHALL BE THOROUGHLY COMPACTED BEFORE BEGINNING ANOTHER LAYER. LAYERS SHALL BE NO MORE THAN 6" IN DEPTH. PUDDLING WILL NOT BE PERMITTED, NOR WILL FROZEN OR WET MATERIAL BE PLACED IN TRENCHES.
2. COMPACTION STANDARDS: ALL BACKFILL MATERIALS USED SHALL CONTAIN A SUFFICIENT AMOUNT OF MOISTURE FOR PROPER COMPACTION AND THESE MATERIALS SHALL BE COMPACTED AT NOT LESS THAN 95% OF THEIR OPTIMUM COMPACTION FOR ANY SPECIFIC SOIL CLASSIFICATION AS DETERMINED BY THE MODIFIED PROCTOR TEST A STM. D698
3. COMPACTION TESTS: COMPACTION TESTS MAY BE REQUIRED IN EXISTING OR PROPOSED STREETS, SIDEWALKS, DRIVES AND OTHER EXISTING OR PROPOSED PAVED AREAS AT VARYING DEPTHS AND AT INTERVALS AS DETERMINED BY THE ENGINEER WITH A MINIMUM OF ONE TEST PER JOB, AND A MAXIMUM OF ONE REQUIRED TEST FOR EACH 400' OR LESS OF WATER MAIN CONSTRUCTION, UNLESS SOIL CONDITIONS OR CONSTRUCTION PRACTICES, IN THE OPINION OF THE ENGINEER, WARRANT THE NEED FOR ADDITIONAL TESTS.
4. NO BOULDERS OR LOOSE ROCKS PERMITTED IN THE BACKFILL AT THE BOTTOM OF PIPE TRENCH TO 2'-0" ABOVE PIPE.
5. ALL DESIGNS BASED ON FULLY COMPACTED BACKFILL AND UNIFORMLY SUPPORTED PIPE.
7. FOR PAVEMENT CUT REPAIRS SEE DRAWING 109.

ALLOWABLE TRENCH WIDTHS

PIPE SIZE (NOM)	A SIDE CLEARANCE INCH		B DITCH WIDTH INCH				C SHORING WIDTH (ADDITIONAL-INCH)	D CUT REPAIR WIDTH FEET			
	SOIL	ROCK	SOIL		ROCK			SOIL		ROCK	
			MJ	SJ	MJ	SJ		MJ	SJ	MJ	SJ
3/4"-2"	2	6	NA	12	NA	14	AS APPROVED	NA	3.00	NA	3.17
4"	9	12	28	22	28	28	AS APPROVED	4.33	3.67	4.33	4.33
6"	9	12	30	24	30	30	AS APPROVED	4.50	4.00	4.50	4.50
8"	9	12	32	26	32	32	AS APPROVED	4.67	4.17	4.67	4.67
10"	9	12	34	28	34	34	AS APPROVED	4.83	4.33	4.83	4.83
12"	9	12	36	30	36	36	AS APPROVED	5.00	4.50	5.00	5.00
14"	9	12	38	32	38	38	AS APPROVED	5.17	4.67	5.17	5.17
16"	9	12	40	34	40	40	AS APPROVED	5.33	4.83	5.33	5.33
20"	9	12	44	38	44	44	AS APPROVED	5.67	5.17	5.67	5.67
24"	9	12	48	42	48	48	AS APPROVED	6.00	5.50	6.00	6.00
30"	9	12	54	48	54	54	AS APPROVED	6.50	6.00	6.50	6.50
36"	9	12	60	54	60	60	AS APPROVED	7.00	6.50	7.00	7.00
42"	9	12	66	60	66	66	AS APPROVED	7.50	7.00	7.50	7.50
48"	9	12	72	66	72	72	AS APPROVED	8.00	7.50	8.00	8.00

FULTON COUNTY STANDARD DETAIL 103
ALLOWABLE TRENCH WIDTHS

DATE	REVISIONS	DATE	REVISIONS
8/08	NRR		
1/17	TPM		

DGS/DRN/CHKD: CMS
APPROVED: REW
DATE: 12-2-05

FULTON COUNTY PUBLIC WORKS
141 PRYOR ST. ATLANTA, GA. 30303
404-612-7400 FAX: 404-224-0498

DRAWING NO. 103

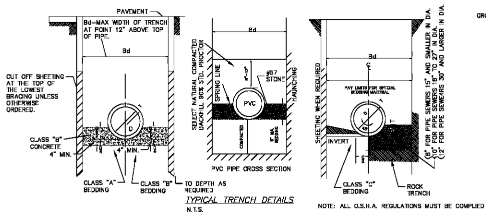

TYPICAL TRENCH DETAILS
N.T.S.

NOTE: ALL O.S.H.A. REGULATIONS MUST BE COMPLIED WITH.

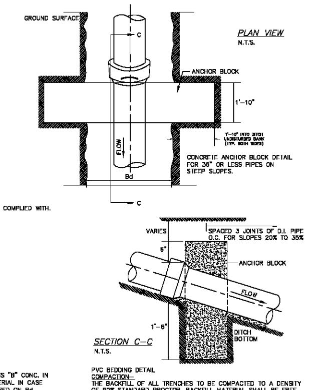

D. IN	A.S.T.M. A746 DUCTILE IRON PIPE T. IN	Bd FT	C FT	*CRADLE	A.S.T.M. C76- REINF. CONC. PIPE T. IN	Bd FT	C FT	*CRADLE	A.S.T.M. C14- EX. STR. CONC. SEWER PIPE T. IN	Bd FT	C FT	*CRADLE	A.S.T.M.-3034 SDR 35 P.V.C. PIPE T. IN	Bd FT
6	0.38	2	0.41	0.034									0.18	2.52
8	0.42	2.09	0.53	0.036					7 / 8	2.15	0.6	0.041	0.24	2.7
10	0.46	2.26	0.65	0.043					1	2.33	0.7	0.047	0.3	2.88
12	0.52	2.43	0.78	0.049					1-3/8	2.56	0.67	0.055	0.36	3.04
15					2	2.67	0.95	0.06	1-5/8	2.85	1.06	0.066	0.437	3.28
18	0.73	2.96	1.15	0.072	2-1/4	3	1.15	0.073	2	3.17	1.3	0.086		
21					2-1/2	3.25	1.35	0.088	2-1/4	3.46	1.5	0.105		
24	0.85	3.48	1.52	0.18	1-3/4	3.54	1.55	0.109	2-5/8	3.77	1.72	0.128		
27					3	3.83	1.75	0.131						
30	0.99	4	1.88	0.149	3	4.08	1.95	0.153						
33					3-1/2	4.42	2.2	0.184						
36	1.19	4.5	2.27	0.198	3-3/4	4.75	2.4	0.215						
42	1.32	5	2.63	0.253	4	5.67	2.6	0.286						
48	1.44	5.5	3	0.314	4-1/2	6.25	3	0.36						
54					5	6.83	3.5	0.44						
60					5-1/2	7.42	3.75	0.54						
66					5	8	4.25	0.63						
72					6-1/2	8.58	4.65	0.74						
					7	9.17	5.07	0.86						

NOTE: PAYMENT QUANITY IN CU. YDS./LIN/FT. OF TRENCH FOR CLASS "B" CONC. IN CASE OF CLASS "A" BEDDING & FOR CRUSHED STONE BEDDING MATERIAL IN CASE OF CLASS "B" BEDDING. ADJUST QUANTITY OF CRADLE MATERIAL BASED ON Bd WIDTH IF DEPTH OF CRADLE EXCEEDS D/4.

PVC BEDDING DETAIL
COMPACTION-
THE BACKFILL OF ALL TRENCHES TO BE COMPACTED TO A DENSITY OF 90% STANDARD PROCTOR. BACKFILL MATERIAL SHALL BE FREE FROM ROOTS, STUMPS, OR OTHER FOREIGN DEBRIS AND SHALL BE PLACED AT OR NEAR OPTIMUM MOISTURE.

FULTON COUNTY STANDARD DETAIL 113
MANHOLES
PRECAST DETAILS

DATE	REVISIONS	DATE	REVISIONS
8/08	NRR		

DGS/DRN/CHKD: REB
APPROVED: REW
DATE: 12-2-05

FULTON COUNTY PUBLIC WORKS
141 PRYOR ST. ATLANTA, GA. 30303
404-612-7400 FAX: 404-224-0498

DRAWING NO. 113

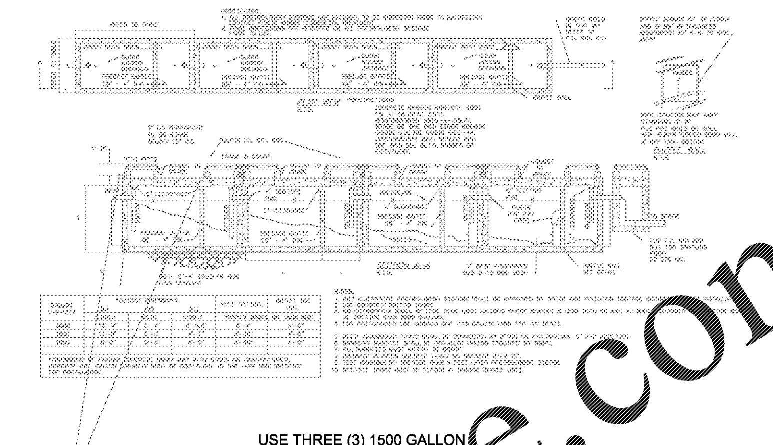

USE THREE (3) 1500 GALLON GREASE TRAPS IN SERIES

FULTON COUNTY STANDARD DETAIL 701
GREASE/SOLIDS/OIL INTERCEPTOR
4 TANKS IN SERIES

DGS/DRN/CHKD:
APPROVED: REW
DATE: 12-2-05

FULTON COUNTY PUBLIC WORKS
141 PRYOR ST. ATLANTA, GA. 30303
404-730-7400 FAX: 404-224-0498

DRAWING NO. 701

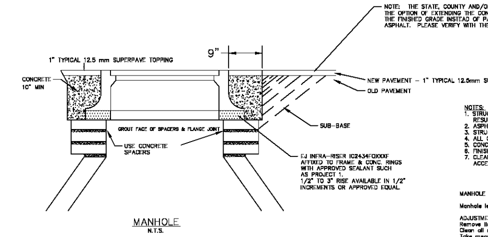

MANHOLE
N.T.S.

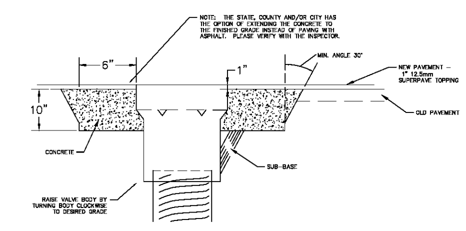

VALVE
N.T.S.

NOTES:
1. STRUCTURES SHALL NOT BE ADJUSTED FOR A PERIOD OF 24 HOURS AFTER RESURFACING IS COMPLETED IN THAT AREA.
2. ASPHALT SHALL BE SAWCUT TO MAKE A SMOOTH, EVEN EDGE.
3. STRUCTURE COVER SHALL BE ADJUSTED TO FIT FLUSH WITH STREET SURFACE.
4. ALL CONCRETE SHALL HAVE A COMPRESSIVE STRENGTH OF 4000 PSI.
5. CONCRETE WILL BE USED TO BACKFILL THE ENTIRE WORKING AREA.
6. FINISHING CONCRETE SHALL BE DONE BY USE OF A TROWEL OR FLOAT.
7. CLEAN ALL ASPHALT OFF SEWER MANHOLES AT TIME OF PAVING TO ALLOW ACCESS TO SYSTEM AT ALL TIMES.

MANHOLE ADJUSTMENTS IN PAVEMENT

Manhole levels shall be flush with the final pavement surface.

ADJUSTMENTS UP TO 3-INCHES
Remove lid.
Clean all rust and debris from seating areas with wire brush.
Take measurements and determine height of risers to be used.
Add appropriately sized steel risers to ring up to 3-inches in height.
Replace manhole lid.

ADJUSTMENTS GREATER THAN 3-INCHES AND LESS THAN 12-INCHES
Locate all utilities near manhole. Hand dig around all utilities.
Saw cut 60-inch by 60-inch square around manhole.
Excavate a minimum depth of 10-inches.
Remove manhole frame and cover to expose cone.
Clean all rust and debris from seating areas with wire brush.
Add an appropriate number of pre-cast concrete spacers to cone.
Replace any existing brick spacers with pre-cast concrete spacers.
Use at least 3/4-inch non-shrink grout between spacers and manhole frame.

ADJUSTMENTS FOR 12-INCHES AND GREATER
Locate all utilities near manhole. Hand dig around all utilities.
Saw cut 60-inch by 60-inch square around manhole.
Excavate a minimum depth of 10-inches.
Remove manhole frame, cover, and cone to expose manhole.
Clean all rust and debris from seating areas with wire brush.
Add an appropriate number of pre-cast concrete risers and spacers to manhole.
Use tar based joint sealer between risers.
Use at least 3/4-inch non-shrink grout between spacers and manhole frame.
Seal joints on the inside with non-chrink grout.

Backfill using crusher run stone compacted in 6-inch layers using a mechanical tamper up to 10-inches below ground surface.
Coat the vertical wall faces of the pavement with a solution of Portland cement and water mixed to a consistency of heavy paint.
Fill the 10-inch open area with Class "A" high early strength Portland cement that has been dyed to match the surrounding pavement.

FULTON COUNTY STANDARD DETAIL 105
STRUCTURE ADJUSTMENT

DATE	REVISIONS	DATE	REVISIONS
8/08	NRR		
7/16	TPM		

DGS/DRN/CHKD: CMS
APPROVED: REW
DATE: 12-2-05

FULTON COUNTY PUBLIC WORKS
141 PRYOR ST. ATLANTA, GA. 30303
404-612-7400 FAX: 404-224-0498

DRAWING NO. 105

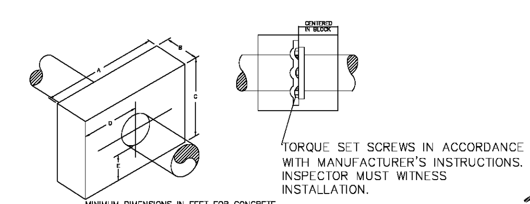

MINIMUM DIMENSIONS IN FEET FOR CONCRETE COLLAR ON DUCTILE IRON PIPE TO BE USED WITH EMBEDDED DUCTILE IRON RETAINER GLAND

PIPE SIZE	A	B	C	D	E	VOLUME CU. YDS.	CONC. WT.	THRUST
4"	3'-6"	3'-0"	1'-5"	1'-6"	1'-0"	0.59	2230	3150
6"	4'-0"	3'-0"	2'-7"	2'-0"	1'-0"	1.15	4650	7070
8"	4'-6"	3'-0"	3'-0"	2'-3"	1'-3"	1.50	6075	12,570
10"	5'-2"	3'-0"	3'-2"	2'-7"	1'-3"	1.81	7330	19,635
12"	5'-9"	3'-0"	3'-8"	2'-10½"	1'-8"	2.34	9475	28,775
14"	6'-6"	3'-0"	4'-0"	3'-3"	1'-9"	2.89	11,700	[illegible]8,490
16"	6'-9"	3'-0"	4'-9"	3'-3"	2'-3"	3.56	[illegible]	[illegible]0,270

NOTES:
1. ALL MAINS GREATER THAN 13" I.D. SHALL BE INDIVIDUALLY CALCULATED BY THE FULTON COUNTY ENGINEERING DEPARTMENT.
2. SOIL CONDITIONS SHALL BE VERIFIED BY ENGINEER BEFORE THRUST RESTRAINT DESIGNATED AS STANDARD. IS IMPLEMENTED.
3. PIPE MUST BE DUCTILE IRON.

DESIGN DATA:
1. DIMENSIONS OF THRUST RESTRAINT IN FEET BASED ON 2000 POUNDS PER SQUARE FOOT SOIL BEARING PRESSURE AND 230 PER SQUARE INCH TEST PRESSURE. ACTUAL INSIDE DIAMETER OF DUCTILE IRON PIPE CLASS 31.
2. CONCRETE SHALL BE CLASS A, 3000 P.S.I.
3. UNDER ADVERSE CONTRUCTION CONDITIONS, CONCRETE SHALL BE "HIGH EARLY" TYPE.

FULTON COUNTY STANDARD DETAIL 125
THRUST RESTRAINT CONCRETE COLLAR

DATE	REVISIONS	DATE	REVISIONS
8/08	NRR		

DGS/DRN/CHKD: CMS
APPROVED: REW
DATE: 12-2-05

FULTON COUNTY PUBLIC WORKS
141 PRYOR ST. ATLANTA, GA. 30303
404-612-7400 FAX: 404-224-0498

DRAWING NO. 125

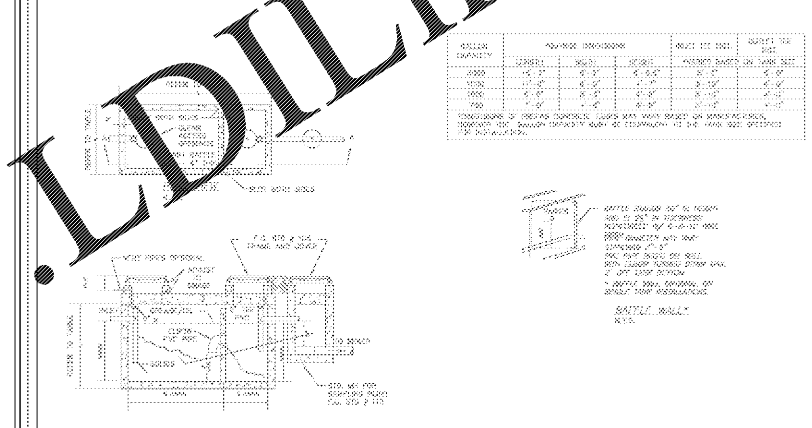

FULTON COUNTY STANDARD DETAIL 702
SINGLE TANKS

DATE	REVISIONS	DATE	REVISIONS
8/08	NRR		
1/17	TPM		

DGS/DRN/CHKD: JM
APPROVED: REW
DATE: 12-2-05

FULTON COUNTY PUBLIC WORKS
141 PRYOR ST. ATLANTA, GA. 30303
404-612-7400 FAX: 404-224-0498

DRAWING NO. 702

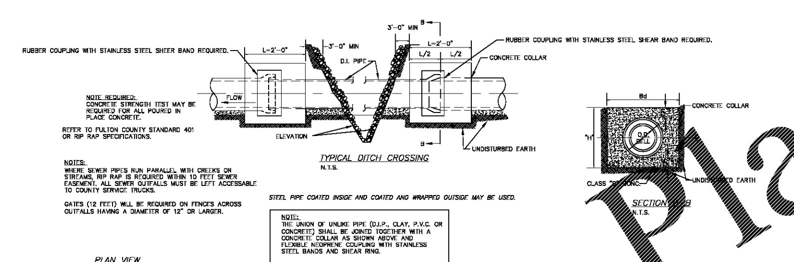

NOTE REQUIRED:
CONCRETE STRENGTH TEST MAY BE REQUIRED FOR ALL POURED IN PLACE CONCRETE.

REFER TO FULTON COUNTY STANDARD 401 OR RIP RAP SPECIFICATIONS.

TYPICAL DITCH CROSSING
N.T.S.

SECTION B-B
N.T.S.

NOTES:
WHERE SEWER PIPES RUN PARALLEL WITH CREEKS OR STREAMS, RIP RAP IS REQUIRED WITHIN 10 FEET SEWER EASEMENT. ALL SEWER OUTFALLS MUST BE LEFT ACCESSABLE TO COUNTY SERVICE TRUCKS.

GATES (12 FEET) WILL BE REQUIRED ON FENCES ACROSS OUTFALLS HAVING A DIAMETER OF 12" OR LARGER.

STEEL PIPE COATED INSIDE AND COATED AND WRAPPED OUTSIDE MAY BE USED.

NOTE:
THE UNION OF UNLIKE PIPE (D.I.P., CLAY, P.V.C. OR CONCRETE) SHALL BE JOINED TOGETHER WITH A CONCRETE COLLAR AS SHOWN ABOVE AND FLEXIBLE NEOPRENE COUPLING WITH STAINLESS STEEL BANDS AND SHEAR RING.

NOTE:
WHERE SERVICE LINE CROSSES STATE HWY. R/W, PIPE AND FITTINGS SHALL BE MECHANICAL JOINT D.I. PIPE, AS SPECIFIED UNDER ITEM NO. 7 D.I. PIPE AND TRENCH SHALL BE BACKFILLED WITH CRUSHED STONE.

TYPICAL SERVICE CONNECTION
N.T.S.

FULTON COUNTY STANDARD DETAIL 113
MANHOLES
PRECAST DETAILS

DATE	REVISIONS	DATE	REVISIONS
8/08	NRR		

DGS/DRN/CHKD: REB
APPROVED: REW
DATE: 12-2-05

FULTON COUNTY PUBLIC WORKS
141 PRYOR ST. ATLANTA, GA. 30303
404-612-7400 FAX: 404-224-0498

DRAWING NO. 113

NOTES:
1. ON PIPE SIZES 6"-14" ROD AND NUT WILL HAVE MIN. YIELD STRENGTH OF 50,000 PSI ON PIPE SIZES 16"-24" ROD AND NUT WILL HAVE MIN. YIELD STRENGTH OF 100,000 PSI
2. RODS HAVE 6" OF THREAD ON EACH END
3. ALL METAL TO BE CLEANED AND COATED WITH AN APPROVED PROTECTIVE COATING FOLLOWING INSTALLATION AND PRIOR TO BACKFILLING. SEE NOTE 3, DWG. NO. 127

	PIPE SIZE	ROD DIA.	NO. RODS	TOTAL THRUST (Lbs)
TEES, PLUGS & VALVES	6"	3/4"	2/3	5,655
	8"	3/4"	2/3	10,055
	10"	3/4"	3	15,710
	12"	3/4"	4	22,620
	14"	3/4"	6	30,800
	16"	3/4"	4	40,215
	20"	3/4"	6	62,835
	24"	3/4"	8	90,480
	30"	1"	6	141,375
	36"	1"	6	203,595
11¼° B	6"	3/4"	2	1,110
	8"	3/4"	2	1,970
	10"	3/4"	2	3,080
	12"	3/4"	2	4,435
	14"	3/4"	2	6,035
	16"	3/4"	2	7,885
	20"	3/4"	2	12,320
	24"	3/4"	2	17,740
	30"	1"	2	27,720
	36"	1"	2	39,910
22½° B	6"	3/4"	2	2,210
	8"	3/4"	2	3,925
	10"	3/4"	2	6,130
	12"	3/4"	2	8,825
	14"	3/4"	2	12,015
	16"	3/4"	2	15,690
	20"	3/4"	2	24,515
	24"	3/4"	2	35,305
	30"	1"	2	55,160
	36"	1"	2	79,435
45° B	6"	3/4"	2/3	4,430
	8"	3/4"	2/3	7,700
	10"	3/4"	2	12,025
	12"	3/4"	4	17,312
	14"	3/4"	4	23,565
	16"	3/4"	4	30,780
	20"	3/4"	4	48,090
	24"	3/4"	6	69,250
	30"	1"	4	108,205
	36"	1"	6	155,810
90°B	6"	3/4"	2/3	8,000
	8"	3/4"	3	14,220
	10"	3/4"	4	22,214
	12"	3/4"	6	32,000
	14"	3/4"	6	43,540
	16"	3/4"	4	56,870
	20"	3/4"	6	88,860
	24"	3/4"	8	127,960
	30"	1"	6	199,930
	36"	1"	6	287,900

FULTON COUNTY STANDARD DETAIL 126
THRUST RESTRAINTS: TIE ROD CHART

DATE	REVISIONS	DATE	REVISIONS
8/08	NRR		

DGS/DRN/CHKD: CMS
APPROVED: REW
DATE: 12-2-05

FULTON COUNTY PUBLIC WORKS
141 PRYOR ST. ATLANTA, GA. 30303
404-612-7400 FAX: 404-224-0498

DRAWING NO. 126

REFER TO NEW F.C. STD. MANHOLE COVER ON SHEET C401 FOR UPDATED DIMENSIONS

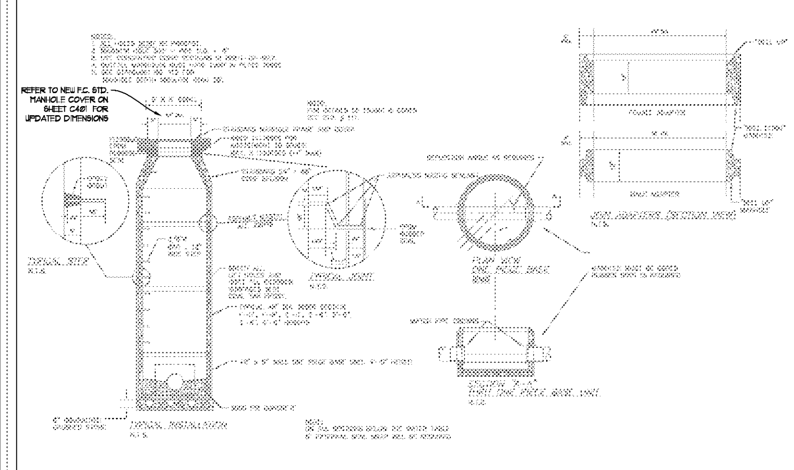

FULTON COUNTY STANDARD DETAIL 113
MANHOLES
PRECAST DETAILS

DATE	REVISIONS	DATE	REVISIONS
8/08	NRR		
1/17	TPM		

DGS/DRN/CHKD: REB
APPROVED: REW
DATE: 12-2-05

FULTON COUNTY PUBLIC WORKS
141 PRYOR ST. ATLANTA, GA. 30303
404-612-7400 FAX: 404-224-0498

DRAWING NO. 113

CDH
ARCHITECTURE
675 Tower Road
Marietta, GA 30060-6958
770.423.0016
www.cdhpartners.com

COPYRIGHT © 2018 by CDH PARTNERS INC. All rights reserved.

FULTON COUNTY SCHOOL SYSTEM

EVOLINE C. WEST ELEMENTARY SCHOOL - RENOVATIONS

7040 RIVERTOWN RD
FAIRBURN, GA 30213

PROJECT NO:

CD	50% CD	11/20/2018
CD	90% CD	10/04/2019
CD	PERMIT SET	11/15/2019
CD	BID SET	12/20/2019

GEORGIA REGISTERED PROFESSIONAL ENGINEER No. PE035701 KYLE WATSON WEBB

CONTRACT DOCUMENT
ISSUED FOR CONSTRUCTION

DO NOT DUPLICATE DRAWINGS WITHOUT WRITTEN PERMISSION

CAUTION

THE UTILITIES SHOWN ARE SHOWN FOR THE CONTRACTOR'S CONVENIENCE ONLY. THERE MAY BE OTHER UTILITIES NOT SHOWN ON THESE PLANS. THE DESIGN PROFESSIONAL ASSUMES NO RESPONSIBILITY FOR THE LOCATIONS SHOWN AND IT SHALL BE THE CONTRACTOR'S RESPONSIBILITY TO VERIFY THE LOCATIONS OF UTILITIES WITHIN THE LIMITS OF THE WORK. DAMAGE TO EXISTING UTILITIES BY THE CONTRACTOR, FROM HIS/ HER OPERATIONS, SHALL BE THE SOLE RESPONSIBILITY OF THE CONTRACTOR.

811 Know what's below. Call before you dig. Dial 811 Or Call 800-282-7411

CONTRACTOR SHALL BE RESPONSIBLE TO SECURE THE SERVICES OF A PRIVATE UTILITY LOCATOR FIRM DURING THE ENTIRE COURSE OF CONSTRUCTION. CONTRACTOR SHALL PAY FOR SAID SERVICES. CONTRACTOR SHALL IMMEDIATELY REPAIR ALL UTILITIES DAMAGED BY CONSTRUCTION ACTIVITIES, AT NO ADDITIONAL COST TO THE OWNER.

CONTRACTOR SHALL BE RESPONSIBLE FOR COMPACTION OF BACKFILL OF ALL UTILITY TRENCHES WITHIN SITE WORK LIMITS. THIS INCLUDES TRENCHES DUG AND BACKFILLED BY LOCAL UTILITIES, SUCH AS POWER, GAS, TELEPHONE, ETC. CONTRACTOR SHALL PROVIDE ADDITIONAL BACKFILL AND COMPACTION AS NECESSARY, IF SETTLEMENT OCCURS.

BREEDLOVE LAND PLANNING
Landscape Architects • Civil Engineers
www.landplanning.net

SHEET TITLE
SITE WORK CONSTRUCTION DETAILS

SHEET NUMBER
C400