Order Plans @ WWW.LDILine.com

ABBREVIATIONS

AC	AIR CONDITION (-ING, -ED)	INV	INVERT
AFF	ABOVE FINISHED FLOOR	KW	KILOWATT
AMP	AMPERE (AMP, AMPS)	LAT	LEAVING AIR TEMPERATURE
AP	ACCESS PANEL	LBS	POUNDS
BTU	BRITISH THERMAL UNIT	LWB	LEAVING WET BULB
BCV	CIRCUIT BALANCING VALVE	LWT	LEAVING WATER TEMPERATURE
CFH	CUBIC FEET PER HOUR	MA	MIXED AIR
CFM	CUBIC FEET PER MINUTE	MAX	MAXIMUM
CHW	CIRCULATING HOT WATER	MBH	THOUSAND BTU'S/HR
CHWR	CHILLED WATER RETURN	MIN	MINIMUM
CHWS	CHILLED WATER SUPPLY	MISC	MISCELLANEOUS
CLG	CEILING	NA	NOT APPLICABLE
CO	CLEANOUT	NC	NOISE CRITERIA
CR	CONDENSATE RETURN	NIC	NOT IN CONTRACT
CW	COLD WATER	NTS	NOT TO SCALE
DB	DECIBEL	OA	OUTSIDE AIR
DEMO	DEMOLITION	OBD	OPPOSED BLADE DAMPER
DIA	DIAMETER	ORD	OVERFLOW ROOF DRAIN
DIFF	DIFFUSER	PH	PHASE (ELECTRICAL)
DWG	DRAWING	PVC	POLYVINYL CHLORIDE
DX	DIRECT EXPANSION	RA	RETURN AIR
EAT	ENTERING AIR TEMPERATURE	RD	ROOF DRAIN
ELEC	ELECTRICAL	REC	RECESSED
ELEV	ELEVATION	REL	RELIEF
EMS	ENERGY MANAGEMENT SYSTEM	RH	RELATIVE HUMIDITY
ESP	EXTERNAL STATIC PRESSURE	RM	ROOM
EWB	ENTERING WET BULB	RPM	REVOLUTIONS PER MINUTE
EWT	ENTERING WATER TEMPERATURE	SA	SUPPLY AIR
EXH	EXHAUST	SAN	SANITARY
EXIST	EXISTING	SD	SMOKE DAMPER
F	FAHRENHEIT	SF	SQUARE FEET
FSD	COMBINATION FIRE/SMOKE DAMPER	SP	STATIC PRESSURE
FCO	FLOOR CLEANOUT	SPEC	SPECIFICATION
FD	FIRE DAMPER	ST	STORM
FD	FLOOR DRAIN	STD	STANDARD
FDC	FIRE DEPARTMENT CONNECTION	TD	TEMPERATURE DIFFERENCE
FFE	FINISHED FLOOR ELEVATION	TSP	TOTAL STATIC PRESSURE
FLR	FLOOR	TYP	TYPICAL
FPM	FEET PER MINUTE	V	VOLTS
FT	FOOT OR FEET	VFD	VARIABLE FREQUENCY DRIVE
GA	GAGE OR GAUGE	VSD	VARIABLE SPEED DRIVE
GAL	GALLONS	VOL	VOLUME
GC	GENERAL CONTRACTOR	VTR	VENT THROUGH ROOF
GPH	GALLONS PER HOUR	W	WATTS
HP	HORSEPOWER	W/	WITH
HT	HEIGHT	W/O	WITHOUT
HVAC	HEATING, VENTILATING, AIR CONDITIONING	WC	WATER CLOSET
HW	HOT WATER	WCO	WALL CLEANOUT
HZ	HERTZ	WT	WEIGHT
ID	INSIDE DIAMETER		

EQUIPMENT TAGS

ACCU	AIR COOLED CONDENSING UNIT	HU	HUMIDIFIER
AHU	AIR HANDLING UNIT	HUH	HORIZONTAL UNIT HEATER
AHUP	AIR HANDLING UNIT PUMP	HWP	HEATING WATER PUMP
BP	BOOSTER PUMP	IH	INTAKE HOOD
CDWP	CONDENSER WATER PUMP	MAU	MAKE-UP AIR UNIT
CEF	CEILING EXHAUST FAN	PCWP	PRIMARY CHILLED WATER PUMP
CHWP	CHILLED WATER PUMP	PHWP	PRIMARY HEATING WATER PUMP
CP	CIRCULATING PUMP	PRV	POWER ROOF VENTILATOR
CPR	CONDENSATE PUMP AND RECEIVER	REF	RELIEF EXHAUST FAN
CRP	CONDENSATE RETURN PUMP	RF	RETURN FAN
CUH	CABINET UNIT HEATER	RH	RELIEF HOOD
DHC	DUCT HEATING COIL	RTU	ROOFTOP UNIT
ECH	ELECTRIC CABINET HEATER	SCWP	SECONDARY CHILLED WATER PUMP
EF	EXHAUST FAN	SHWP	SECONDARY HEATING WATER PUMP
EHC	ELECTRIC HEATING COIL	SEP	SEWAGE EJECTOR PUMP
ES	ELECTRONIC SENSOR	SP	SUMP PUMP
EUH	ELECTRIC UNIT HEATER	TF	TRANSFER FAN
EWC	ELECTRIC WATER COOLER	USF	UTILITY SET FAN
EWH	ELECTRIC WATER HEATER	VAV	VARIABLE AIR VOLUME BOX
FCU	FAN COIL UNIT	VUH	VERTICAL UNIT HEATER
FPB	FAN POWERED VARIABLE AIR VOLUME BOX	WS	WATER SOFTENER
GWH	GAS WATER HEATER		

HVAC SYMBOL LEGEND

DUCTWORK	12/12
SUPPLY DUCT UP	12/12
SUPPLY DUCT DOWN	12/12
SUPPLY DUCT UP THROUGH ROOF	12/12
RETURN/RELIEF DUCT UP	12/12
RETURN/RELIEF DUCT DOWN	12/12
RETURN/RELIEF DUCT UP THROUGH ROOF	12/12
EXHAUST DUCT UP	12/12
EXHAUST DUCT DOWN	12/12
EXHAUST DUCT UP THROUGH ROOF	12/12
MANUAL VOLUME DAMPER	12/12
MOTORIZED DAMPER	M 12/12
REMOTELY ACCESSIBLE VOLUME DAMPER	12/12
FIRE DAMPER W/ACCESS PANEL	FD 12/12
FIRE/SMOKE DAMPER W/ACCESS PANEL	FSD 12/12
SMOKE DAMPER W/ACCESS PANEL	SD 12/12
DUCT RISE (OR DROP)	UP (OR DN)
EXISTING DUCTWORK TO REMAIN	12/12
EXISTING DUCTWORK TO BE REMOVED	12/12
SUPPLY AIR TERMINAL	
RETURN/EXHAUST/TRANSFER AIR TERMINAL	
VAV BOX	
ACCESS PANEL	A P
THERMOSTAT	T
TEMPERATURE SENSOR	
SMOKE DETECTOR	
CO2 SENSOR	C
LONG RADIUS ELBOW	
SHORT RADIUS ELBOW WITH VANES	
DIFFUSER TYPE | NECK SIZE / AIRFLOW | QUANTITY	'X' | XX"ø / XXX (X)

PLUMBING SYMBOL LEGEND

FLOOR DRAIN	ANCHOR	REDUCER
FLOOR SINK W/HALF GRATE	PIPE FLANGE	FLOW ARROW
FLOOR SINK W/FULL GRATE	PIPE GUIDE	STEAM TRAP (F&T)
BALL VALVE	AIR CHAMBER	THERMOSTAT WELL
GATE VALVE	WATER HAMMER ARRESTER	EXPANSION JOINT
CHECK VALVE	WALL HYDRANT/ HOSE BIBB	FLEXIBLE CONNECTOR
DRAIN VALVE	EXPANSION TANK	TEST PLUG
2-WAY VALVE	WATER METER	STEAM TRAP (THERMOSTATIC)
SOLENOID VALVE	FLOW METER	VACUUM RELIEF VALVE
MOTORIZED VALVE	THERMOMETER	AQUASTAT
EMERGENCY GAS SHUT-OFF VALVE	PRESSURE GAGE	PRESSURE REGULATOR
THERMOSTATIC/PRESSURE BALANCE MIXING VALVE	STRAINER	PIPE DOWN
TRAP PRIMING VALVE	PUMP	PIPE UP
PRESSURE RELIEF VALVE	PLUMBING FIXTURE TAG	TEE DOWN
BUTTERFLY VALVE	FLOW SWITCH	UNION
GLOBE VALVE	3-WAY VALVE	PIPE CAP
CIRCUIT BALANCING VALVE	BACKFLOW PREVENTER	PIPE BREAK
PLUG VALVE		

MISC. SYMBOL LEGEND

EQUIPMENT TAG	CONNECTION TO EXISTING	SPRINKLER HEAD (SEMI-RECESSED)
REVISION TRIANGLE	KEYNOTE	SPRINKLER HEAD (UPRIGHT)
		SPRINKLER HEAD (CONCEALED)

PLUMBING LINETYPE LEGEND

- DOMESTIC COLD WATER
- DOMESTIC COLD WATER (BELOW FLOOR/GRADE)
- DOMESTIC COLD WATER (EXISTING)
- DOMESTIC HOT WATER
- DOMESTIC HOT WATER (EXISTING)
- G — GAS
- G — GAS (ON ROOF)
- G — GAS (EXISTING)
- G — GAS (EXISTING ON ROOF)
- SANITARY SEWER (ABOVE FLOOR/GRADE)
- SANITARY SEWER (BELOW FLOOR/GRADE)
- SANITARY SEWER (EXISTING)
- VENT
- VENT (UNDERFLOOR/GRADE)
- VENT (EXISTING)

HVAC PIPING LINETYPE LEGEND

- CHWR — CHILLED WATER RETURN
- CHWR — CHILLED WATER RETURN (EXISTING)
- CHWS — CHILLED WATER SUPPLY
- CHWS — CHILLED WATER SUPPLY (EXISTING)
- CD — CONDENSATE DRAIN
- CD — CONDENSATE DRAIN (EXISTING)
- HWR — HOT WATER RETURN
- HWR — HOT WATER RETURN (EXISTING)
- HWRR — HOT WATER REVERSE RETURN
- HWRR — HOT WATER REVERSE RETURN (EXISTING)
- HWS — HOT WATER SUPPLY
- HWS — HOT WATER SUPPLY (EXISTING)
- RL — REFRIGERANT LIQUID
- RL — REFRIGERANT LIQUID (EXISTING)
- RS — REFRIGERANT SUCTION
- RS — REFRIGERANT SUCTION (EXISTING)

SHEET INDEX

M0.0 MECHANICAL TITLE SHEET AND DETAILS
M1.0 HVAC PLAN
M2.0 MECHANICAL SPECIFICATIONS
P1.0 PLUMBING PLAN

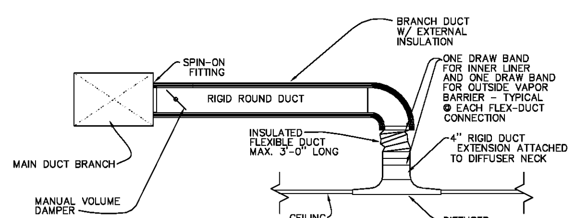

1 TYP. DIFFUSER/DUCT CONNECTIONS
NO SCALE — SURFACE MOUNT DIFFUSER

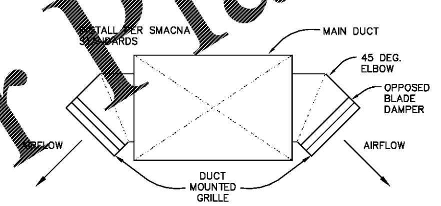

2 DUCT MOUNTED GRILLE
NO SCALE

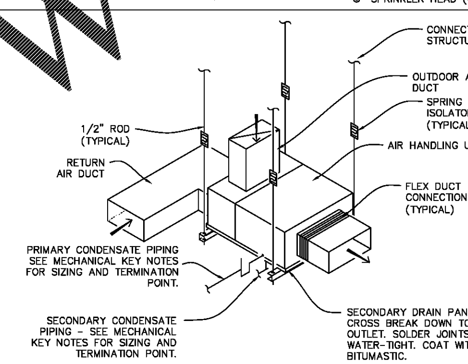

3 AHU MOUNTING DETAIL
NO SCALE

NOTES:
OFFSET PIPING SO COIL CAN BE PULLED WITHOUT DISMANTLING PIPING
DO NOT BLOCK EQUIPMENT ACCESS DOORS AND PANELS

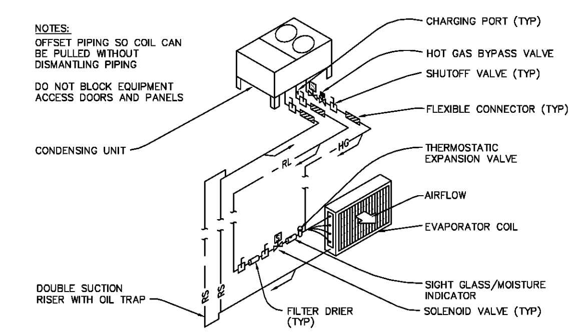

4 REFRIGERANT PIPING
NO SCALE — VERTICAL RISE OF LESS THAN 25'

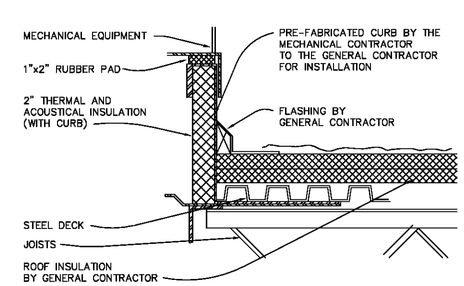

5 MECHANICAL EQUIPMENT CURB DETAIL
NO SCALE

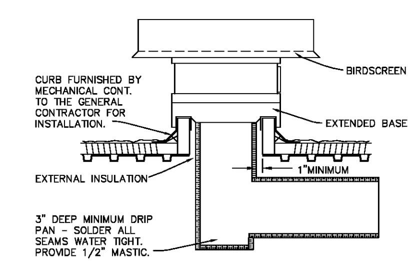

6 INTAKE HOOD DETAIL
NO SCALE

DTLR
YOUR FASHION...YOUR LIFESTYLE
STORE XXXX

WESLEY CHAPEL CROSSING
SPACES 11, 12, 13 & 14
2440 WESLEY CHAPEL ROAD
DECATUR, GA 30035

GEORGIA REGISTERED No. 032831 PROFESSIONAL ENGINEER RICHARD L. LUCIO

HALLBERG ENGINEERING
Mechanical/Electrical Consulting Engineers
1750 Commerce Court
White Bear Lake, MN 55110
(651) 748-1100 Fax (651) 748-9370

lga PARTNERS
1425 Forbes Ave. Suite 400 Pittsburgh, PA 15219
P 412.243.3430 F 412.224.4747

These drawings are instruments of the Architect's service and are the property of LGA Partners LP. They shall not be reproduced or used in any way, whatsoever, without the written permission of LGA Partners LP. © 2019

NO.	DATE	DESCRIPTION

DATE:	12-20-2019
DRAWN BY:	KMH
CHECKED BY:	MDB
PROJECT NO.:	R19-3725.000

MECHANICAL TITLE SHEET AND DETAILS

M0.0