DOOR TYPES

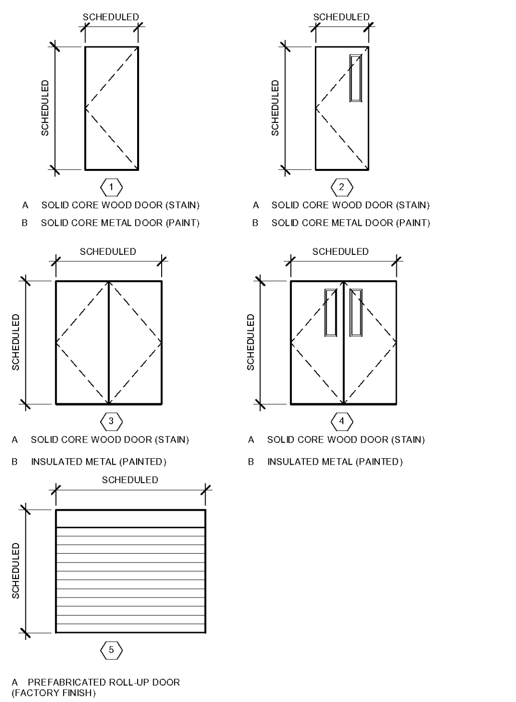

FRAME TYPES

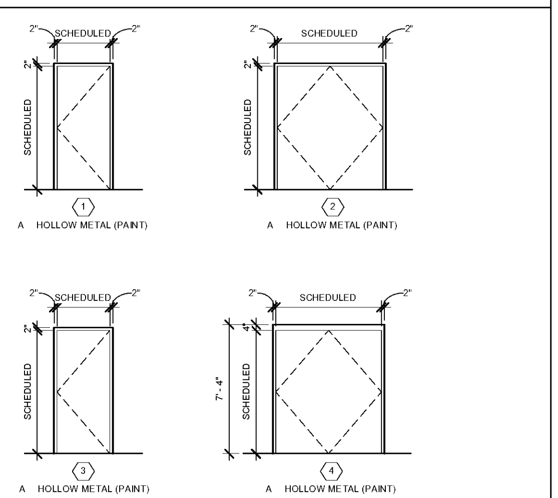

STOREFRONT AND GLAZING TYPES

GLAZING SCHEDULE	
A	BULLET PROOF GLASS
B	ONE-WAY MIRROR GLASS

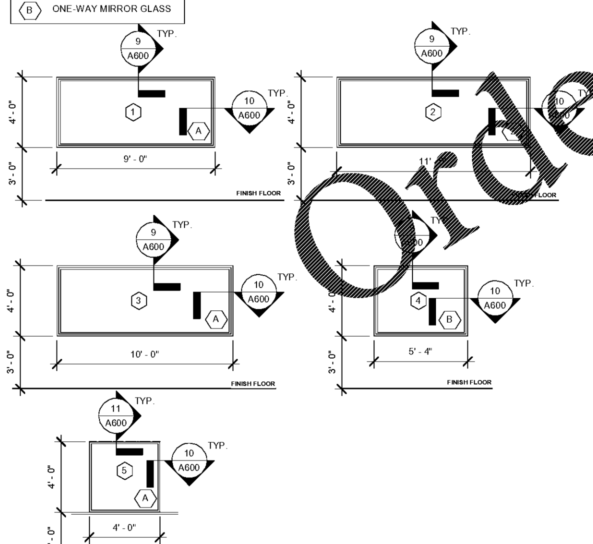

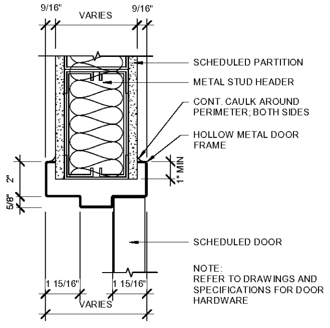

3 HOLLOW METAL HEAD DETAIL (INT.)
A600 3" = 1'-0"

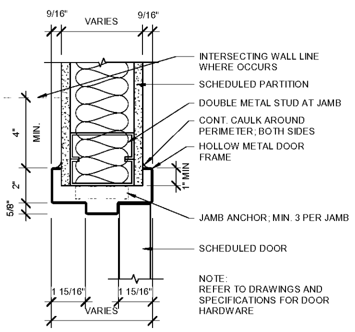

4 HOLLOW METAL JAMB DETAIL (INT.)
A600 3" = 1'-0"

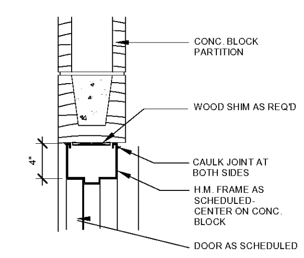

5 CMU DOOR HEAD DETAIL
A600 1 1/2" = 1'-0"

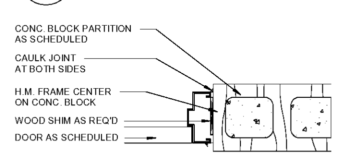

6 CMU DOOR JAMB DETAIL
A600 1 1/2" = 1'-0"

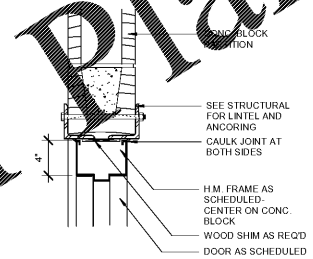

7 CMU DOOR HEAD DETAIL AT LINTEL
A600 1 1/2" = 1'-0"

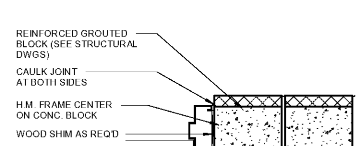

8 CMU DOOR JAMB DETAIL 2
A600 1 1/2" = 1'-0"

DOOR SCHEDULE

DOOR #	LOCATION	DOOR TYPE	WIDTH	HEIGHT	THICKNESS	MATERIAL	FINSIH	FRAME TYPE	FRAME MATERIAL	FRAME FINISH	HEAD DETAIL	JAMB DETAIL	FIRE RATING	HARDWARE SET #	PANIC	COMMENTS
100A	LOBBY	EXISTING	5' - 0"	7' - 0"	EXISTING	EXISTING	EXISTING	EXISTING	EXISTING	EXISTING	EXISTING	EXISTING		EXISTING		
100B	LOBBY	EXISTING	5' - 0"	7' - 0"	EXISTING	EXISTING	EXISTING	EXISTING	EXISTING	EXISTING	EXISTING	EXISTING		EXISTING		
100C	LOBBY	4A	6' - 0"	7' - 0"	1-3/4"	WOOD	STAIN	2A	HOLLOW METAL	PAINT	3/A600	4/A600		20	YES	CARD READER
100D	LOBBY	4A	6' - 0"	7' - 0"	1-3/4"	WOOD	STAIN	2A	HOLLOW METAL	PAINT	3/A600	4/A600		20	YES	CARD READER
101	RECEPTION	2A	3' - 0"	7' - 0"	1-3/4"	WOOD	STAIN	1A	HOLLOW METAL	PAINT	3/A600	4/A600		51		
102	STORAGE	1A	3' - 0"	7' - 0"	1-3/4"	WOOD	STAIN	1A	HOLLOW METAL	PAINT	3/A600	4/A600		82		
103	TAC	2A	3' - 0"	7' - 0"	1-3/4"	WOOD	STAIN	1A	HOLLOW METAL	PAINT	3/A600	4/A600		50		
104	ADMIN/ OIC/ STATE CERT.	2A	3' - 0"	7' - 0"	1-3/4"	WOOD	STAIN	1A	HOLLOW METAL	PAINT	3/A600	4/A600		50		
106	COURT RECORDS	1A	3' - 0"	7' - 0"	1-3/4"	WOOD	STAIN	1A	HOLLOW METAL	PAINT	3/A600	4/A600		71		CARD READER
107	JANITOR	1A	3' - 0"	7' - 0"	1-3/4"	WOOD	STAIN	1A	HOLLOW METAL	PAINT	3/A600	4/A600		80		
108	MEN RESTROOM	1A	3' - 0"	7' - 0"	1-3/4"	WOOD	STAIN	1A	HOLLOW METAL	PAINT	3/A600	4/A600		10		
109	WOMEN RESTROOM	1A	3' - 0"	7' - 0"	1-3/4"	WOOD	STAIN	1A	HOLLOW METAL	PAINT	3/A600	4/A600		10		
110	REPORT ROOM	2A	3' - 0"	7' - 0"	1-3/4"	WOOD	STAIN	1A	HOLLOW METAL	PAINT	3/A600	4/A600		71		
111A	CHIEF'S ASSISTANT	2A	3' - 0"	7' - 0"	1-3/4"	WOOD	STAIN	1A	HOLLOW METAL	PAINT	3/A600	4/A600		50		
111B	STORAGE	1A	3' - 0"	7' - 0"	1-3/4"	WOOD	STAIN	1A	HOLLOW METAL	PAINT	3/A600	4/A600		81		
112A	CHIEF'S OFFICE	1A	3' - 0"	7' - 0"	1-3/4"	WOOD	STAIN	1A	HOLLOW METAL	PAINT	3/A600	4/A600		50		
112B	CLOSET	1A	3' - 0"	7' - 0"	1-3/4"	WOOD	STAIN	1A	HOLLOW METAL	PAINT	3/A600	4/A600		81		
113	RESTROOM	1A	3' - 0"	7' - 0"	1-3/4"	WOOD	STAIN	1A	HOLLOW METAL	PAINT	3/A600	4/A600		40		
114A	ASSISTANT CHIEF	2A	3' - 0"	7' - 0"	1-3/4"	WOOD	STAIN	1A	HOLLOW METAL	PAINT	3/A600	4/A600		50		
114B	CLOSET	1A	3' - 0"	7' - 0"	1-3/4"	WOOD	STAIN	1A	HOLLOW METAL	PAINT	3/A600	4/A600		81		
115	RESTROOM	1A	3' - 0"	7' - 0"	1-3/4"	WOOD	STAIN	1A	HOLLOW METAL	PAINT	3/A600	4/A600		40		
116	UNIFOR PATROL CAPTAIN	2A	3' - 0"	7' - 0"	1-3/4"	WOOD	STAIN	1A	HOLLOW METAL	PAINT	3/A600	4/A600		50		
117	C.I.D. CAPTAIN	2A	3' - 0"	7' - 0"	1-3/4"	WOOD	STAIN	1A	HOLLOW METAL	PAINT	3/A600	4/A600		50		ADD ALTERNATE DOOR (SEE FLOOR PLAN 1/A100)
118	JOINT OPERATIONS	2A	3' - 0"	7' - 0"	1-3/4"	WOOD	STAIN	1A	HOLLOW METAL	PAINT	3/A600	4/A600		50		ADD ALTERNATE DOOR (SEE FLOOR PLAN 1/A100)
119	BREAKROOM	2A	3' - 0"	7' - 0"	1-3/4"	WOOD	STAIN	1A	HOLLOW METAL	PAINT	3/A600	4/A600		71		
120	RESTROOM	1A	3' - 0"	7' - 0"	1-3/4"	WOOD	STAIN	1A	HOLLOW METAL	PAINT	3/A600	4/A600		40		
121	TRAINING CLASSROOM	2A	3' - 0"	7' - 0"	1-3/4"	WOOD	STAIN	1A	HOLLOW METAL	PAINT	3/A600	4/A600		71		
122	TRAINING LT.	2A	3' - 0"	7' - 0"	1-3/4"	WOOD	STAIN	1A	HOLLOW METAL	PAINT	3/A600	4/A600		[illegible]		
123	SERVER	1A	3' - 0"	7' - 0"	1-3/4"	WOOD	STAIN	1A	HOLLOW METAL	PAINT	3/A600	4/A600		82		
124	SUPPLY	3A	6' - 0"	7' - 0"	1-3/4"	WOOD	STAIN	2A	HOLLOW METAL	PAINT	3/A600	4/A600		84		
125.1	STORAGE	1A	3' - 0"	7' - 0"	1-3/4"	WOOD	STAIN	1A	HOLLOW METAL	PAINT	3/A600	4/A600		82		
126A	SIDE ENTRANCE	EXISTING	6' - 0"	7' - 0"	EXISTING	EXISTING	EXISTING	EXISTING	EXISTING	PAINT	EXISTING	EXISTING		73		
127A	C.I.D. BULL PEN	2A	3' - 0"	7' - 0"	1-3/4"	WOOD	STAIN	1A	HOLLOW METAL	PAINT	3/A600	4/A600		10		
127B	C.I.D. BULL PEN	2A	3' - 0"	7' - 0"	1-3/4"	WOOD	STAIN	1A	HOLLOW METAL	PAINT	3/A600	4/A600		10		
128	C.I.D. LT.	2A	3' - 0"	7' - 0"	1-3/4"	WOOD	STAIN	1A	HOLLOW METAL	PAINT	3/A600	4/A600		50		
129	STORAGE	1A	3' - 0"	7' - 0"	1-3/4"	WOOD	STAIN	1A	HOLLOW METAL	PAINT	3/A600	4/A600		81		
130	LAUNDRY	1A	3' - 0"	7' - 0"	1-3/4"	WOOD	STAIN	1A	HOLLOW METAL	PAINT	3/A600	4/A600		70		
131	MEN LOCKER & SHOWER	EXISTING	3' - 0"	7' - 0"	EXISTING	EXISTING	EXISTING	EXISTING	EXISTING	PAINT	EXISTING	EXISTING		10 OR 11*		* - HARDWARE SET 11 IS AN ADD ALTERNATE
132	WOMEN LOCKER & SHOWER	EXISTING	3' - 0"	7' - 0"	EXISTING	EXISTING	EXISTING	EXISTING	EXISTING	PAINT	EXISTING	EXISTING		10 OR 11*		
134	GYM		3' - 0"	7' - 0"			PAINT	3A	HOLLOW METAL	PAINT	7/A600	8/A600		03		CARD READER, PREP AND PAINT EXTERIOR DOOR
134.1	SIDE ENTRANCE	EXISTING	3' - 0"	6' - 8"	EXISTING	EXISTING	PAINT	EXISTING	EXISTING	PAINT	EXISTING	EXISTING		01	YES	CARD READER, PREP AND PAINT EXTERIOR DOOR
135	ELECTRICAL	EXISTING	6' - 0"	7' - 0"	EXISTING	EXISTING	PAINT	EXISTING	EXISTING	PAINT	EXISTING	EXISTING	20 MINS.	04	YES	
136			3' - 0"	1' - 0 19/32"												
136A	VEHICLE PROCESSING	2A	3' - 0"	7' - 0"	EXISTING	WOOD	STAIN	1A	HOLLOW METAL	PAINT	3/A600	4/A600		71		
136B	VEHICLE PROCESSING	EXISTING	3' - 0"	7' - 0"	EXISTING	EXISTING	PAINT	1A	HOLLOW METAL	PAINT	EXISTING	EXISTING		03		CARD READER, PREP AND PAINT EXTERIOR DOOR
136C	VEHICLE PROCESSING	5A	20' - 0"	12' - 3"	N/A	ALUMINUM	FACTORY FINISH	N/A	N/A	FACTORY FINISH				91		CONTRACTOR TO FIELD VERIFY WITH EXISTING OPENING HEIGHT. MATCH EXISTING OPENING HEIGHT.
137A	WATER HEATER & ROOF ACCESS	EXISTING	3' - 0"	7' - 0"	EXISTING	EXISTING	PAINT	EXISTING	EXISTING	PAINT	EXISTING	EXISTING		83		
137B	WATER HEATER & ROOF ACCESS	EXISTING	3' - 0"	7' - 0"	EXISTING	EXISTING	PAINT	EXISTING	EXISTING	PAINT	EXISTING	EXISTING		83		
138A	BOOKING & FINGERPRINTING	2A	3' - 0"	7' - 0"	1-3/4"	WOOD	STAIN	1A	HOLLOW METAL	PAINT	3/A600	4/A600		50		WIRE MESH SECURITY DOOR
138B	BOOKING & FINGERPRINTING	2A	3' - 0"	7' - 0"	1-3/4"	WOOD	STAIN	1A	HOLLOW METAL	PAINT	3/A600	4/A600		50		WIRE MESH SECURITY DOOR
140	REAR ENTRANCE	4B	6' - 0"	7' - 0"	1-3/4"	METAL	PAINT	4A	HOLLOW METAL	PAINT	7/A600	8/A600		02		NEW EXTERIOR DOOR WITH CARD READER
141	CONTROL	2A	3' - 0"	7' - 0"	1-3/4"	WOOD	STAIN	1A	HOLLOW METAL	PAINT	3/A600	4/A600		50		
142	INTERVIEW ROOM	2A	3' - 0"	7' - 0"	1-3/4"	WOOD	STAIN	1A	HOLLOW METAL	PAINT	3/A600	4/A600		52		
143	INTERVIEW ROOM	2A	3' - 0"	7' - 0"	1-3/4"	WOOD	STAIN	1A	HOLLOW METAL	PAINT	3/A600	4/A600		52		
144	INTERVIEW ROOM	2A	3' - 0"	7' - 0"	1-3/4"	WOOD	STAIN	1A	HOLLOW METAL	PAINT	3/A600	4/A600		52		
145	CORRIDOR	2A	3' - 0"	7' - 0"	1-3/4"	WOOD	STAIN	1A	HOLLOW METAL	PAINT	5/A600	6/A600		70		
146	HOLDING CELL	2B	3' - 0"	7' - 0"	1-3/4"	METAL	PAINT	1A	HOLLOW METAL	PAINT	5/A600	6/A600		53		
147	HOLDING CELL	2B	3' - 0"	7' - 0"	1-3/4"	METAL	PAINT	1A	HOLLOW METAL	PAINT	5/A600	6/A600		53		
148	K-9 OFFICE	2A	3' - 0"	7' - 0"	1-3/4"	WOOD	STAIN	1A	HOLLOW METAL	PAINT	5/A600	6/A600		50		
148.1	K-9 OFFICE	1B	3' - 0"	7' - 0"	1-3/4"	METAL	PAINT	3A	HOLLOW METAL	PAINT	7/A600	8/A600		23		ADD ALTERNATE # 2 DOOR WITH CARD READER (SEE 14/A100.1)
149	TESTING LAB	2A	3' - 0"	7' - 0"	1-3/4"	WOOD	STAIN	1A	HOLLOW METAL	PAINT	3/A600	4/A600		50		
150	EVIDENCE STORAGE ENTRY	4A	6' - 0"	7' - 0"	1-3/4"	WOOD	STAIN	2A	HOLLOW METAL	PAINT	7/A600	8/A600		24		CARD READER
151A	EVIDENCE PROCESSING	2A	3' - 0"	7' - 0"	1-3/4"	WOOD	STAIN	1A	HOLLOW METAL	PAINT	3/A600	4/A600		22		CARD READER
151B	EVIDENCE STORAGE	2A	3' - 0"	7' - 0"	1-3/4"	WOOD	STAIN	1A	HOLLOW METAL	PAINT	3/A600	4/A600	20 MINS.	82		
152	EVIDENCE STORAGE	4A	6' - 0"	7' - 0"	1-3/4"	WOOD	STAIN	2A	HOLLOW METAL	PAINT	3/A600	4/A600	20 MINS.	24		CARD READER
153	DRUG EVIDENCE	2A	3' - 0"	7' - 0"	1-3/4"	WOOD	STAIN	1A	HOLLOW METAL	PAINT	3/A600	4/A600		82		
156A	SQUAD ROOM	2A	3' - 0"	7' - 0"	1-3/4"	WOOD	STAIN	1A	HOLLOW METAL	PAINT	3/A600	4/A600		71		CARD READER
156B	SQUAD ROOM	2A	3' - 0"	7' - 0"	1-3/4"	WOOD	STAIN	1A	HOLLOW METAL	PAINT	3/A600	4/A600		71		
157	MEN RESTROOM	1A	3' - 0"	7' - 0"	1-3/4"	WOOD	STAIN	1A	HOLLOW METAL	PAINT	7/A600	8/A600		40		
158	WOMEN RESTROOM	1A	3' - 0"	7' - 0"	1-3/4"	WOOD	STAIN	1A	HOLLOW METAL	PAINT	7/A600	8/A600		40		
159	SERGEANT	2A	3' - 0"	7' - 0"	1-3/4"	WOOD	STAIN	1A	HOLLOW METAL	PAINT	3/A600	4/A600		50		ADD ALTERNATE DOOR (SEE FLOOR PLAN 1/A100)
160	LIEUTENANT	2A	3' - 0"	7' - 0"	1-3/4"	WOOD	STAIN	1A	HOLLOW METAL	PAINT	3/A600	4/A600		50		
161	JUDGE'S CHAMBER	2A	3' - 0"	7' - 0"	1-3/4"	WOOD	STAIN	1A	HOLLOW METAL	PAINT	3/A600	4/A600		50		
162A	PRISONER CONFERENCE	2A	3' - 0"	7' - 0"	1-3/4"	WOOD	STAIN	1A	HOLLOW METAL	PAINT	3/A600	4/A600		53		
162B	PRISONER CONFERENCE	2A	3' - 0"	7' - 0"	1-3/4"	WOOD	STAIN	1A	HOLLOW METAL	PAINT	3/A600	4/A600	20 MINS.	53		
163A	COURTROOM	4A	6' - 0"	7' - 0"	1-3/4"	WOOD	STAIN	2A	HOLLOW METAL	PAINT	3/A600	4/A600	20 MINS.	72	YES	
163B	COURTROOM	2A	3' - 0"	7' - 0"	1-3/4"	WOOD	STAIN	1A	HOLLOW METAL	PAINT	3/A600	4/A600	20 MINS.	21	YES	CARD READER
163C	COURTROOM	2A	3' - 0"	7' - 0"	1-3/4"	WOOD	STAIN	1A	HOLLOW METAL	PAINT	3/A600	4/A600	20 MINS.	70		CARD READER
163D	COURTROOM	2A	3' - 0"	7' - 0"	1-3/4"	WOOD	STAIN	1A	HOLLOW METAL	PAINT	3/A600	4/A600	20 MINS.	21	YES	CARD READER
163E	COURTROOM	2A	3' - 0"	7' - 0"	1-3/4"	WOOD	STAIN	1A	HOLLOW METAL	PAINT	3/A600	4/A600	20 MINS.	22		CARD READER
164	INTERVIEW ROOM	2A	3' - 0"	7' - 0"	1-3/4"	WOOD	STAIN	1A	HOLLOW METAL	PAINT	3/A600	4/A600		52		
165	INTERIVEW ROOM	2A	3' - 0"	7' - 0"	1-3/4"	WOOD	STAIN	1A	HOLLOW METAL	PAINT	3/A600	4/A600		52		
166A	PROBATION	2A	3' - 0"	7' - 0"	1-3/4"	WOOD	STAIN	1A	HOLLOW METAL	PAINT	3/A600	4/A600		70		
166B	PROBATION	2A	3' - 0"	7' - 0"	1-3/4"	WOOD	STAIN	1A	HOLLOW METAL	PAINT	3/A600	4/A600	20 MINS.	70		
167	SOLICITOR	2A	3' - 0"	7' - 0"	1-3/4"	WOOD	STAIN	1A	HOLLOW METAL	PAINT	3/A600	4/A600	20 MINS.	70		
168	HOLDING CELL	2B	3' - 0"	7' - 0"	1-3/4"	METAL	PAINT	1A	HOLLOW METAL	PAINT	5/A600	6/A600		53		
169	HOLDING CELL	2B	3' - 0"	7' - 0"	1-3/4"	METAL	PAINT	1A	HOLLOW METAL	PAINT	5/A600	6/A600		53		
170	CORRIDOR	EXISTING	3' - 0"	7' - 0"	EXISTING	EXISTING	PAINT	EXISTING	EXISTING	PAINT	EXISTING	EXISTING		01		CARD READER, PREP AND PAINT EXTERIOR DOOR
178	CORRIDOR	2A	3' - 0"	7' - 0"	1-3/4"	WOOD	PAINT	1A	HOLLOW METAL	PAINT	3/A600	4/A600				

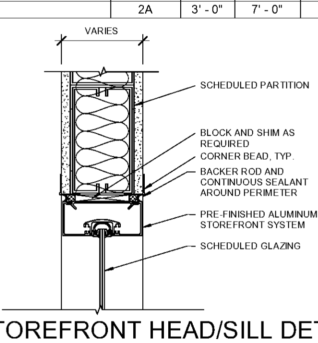

9 STOREFRONT HEAD/SILL DETAIL - INT.
A600 3" = 1'-0"

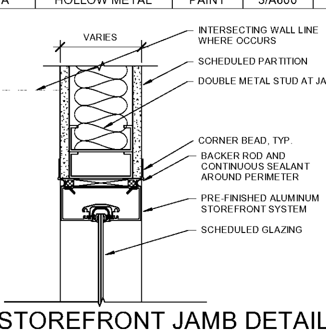

10 STOREFRONT JAMB DETAIL - INT.
A600 3" = 1'-0"

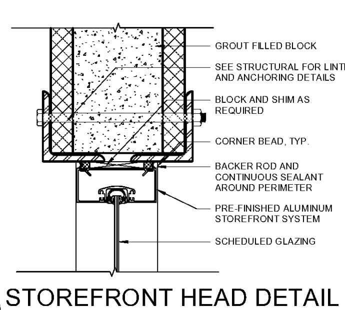

11 STOREFRONT HEAD DETAIL - INT.
A600 3" = 1'-0"

ISSUED FOR CONSTRUCTION

STATE OF GEORGIA — LILY DEL C. BERRIOS — REGISTERED ARCHITECT

DATE	DESCRIPTION	No.

CITY OF MONROE
PUBLIC SAFETY & MUNICIPAL COURT COMPLEX RENOVATION
140 BLAINE ST. MONROE, GA 30655

sizemoregroup
342 MARIETTA ST. NW
UNIT 3
ATLANTA, GEORGIA 30313
T: 404 605 0690
F: 404 605 0890
www.sizemoregroup.com

© 2019 SIZEMORE GROUP

THIS DRAWING IS AN INSTRUMENT OF SERVICE AND SHALL REMAIN THE PROPERTY OF THE ARCHITECT. NO PART OF THIS DOCUMENT SHALL BE REPRODUCED OR TRANSMITTED IN ANY FORM, ELECTRONICALLY OR MECHANICALLY, FOR ANY PURPOSE, WITHOUT THE EXPRESS WRITTEN PERMISSION OF THE ARCHITECT.

DOOR & WINDOW SCHEDULE

PROJECT # 19160MONRpo
DATE: Issue Date
DRAWN BY: Author
CHECKED BY: Checker

A600

SCALE As indicated

C:\Users\maddieh\Documents\19160MONRpo_Arch_CD Model 1_maddiehT2NDG.rvt 10/28/2019 1:20:53 PM

Order Plans @ WWW.LDIILine.com