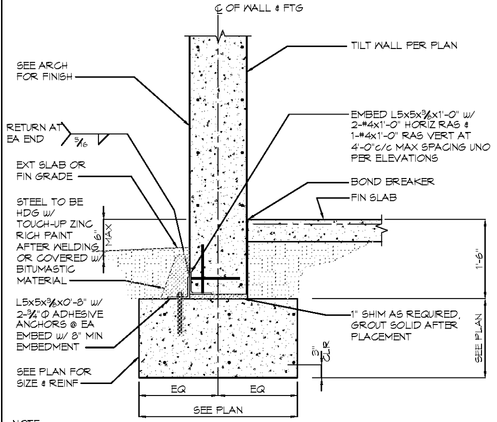

NOTE:
SEE 2/S2.01 FOR TILT UP PANEL AT EXTERIOR DOOR.

1 TYP TILT-UP PANEL AT FOOTING

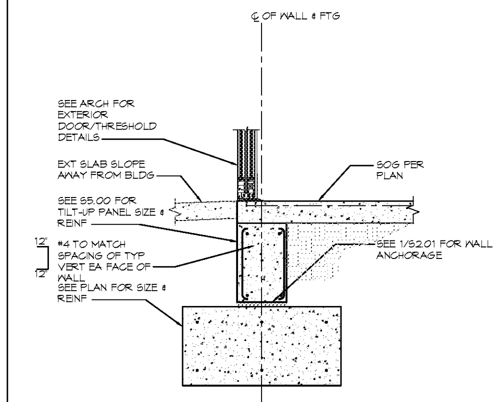

2 EXTERIOR DOOR OR GLAZING @ TILT-UP PANEL

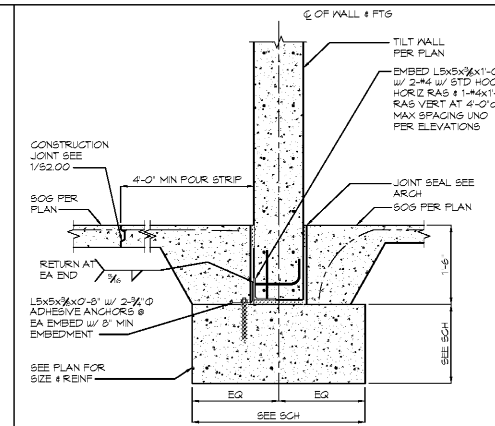

3 FTG @ INTERIOR TILT UP w/ POUR STRIP AT SLAB

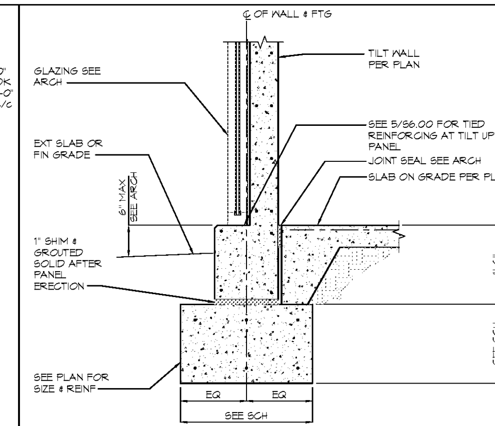

4 TYP RECESSED WINDOW ON TILT-UP PANEL AT FOOTING

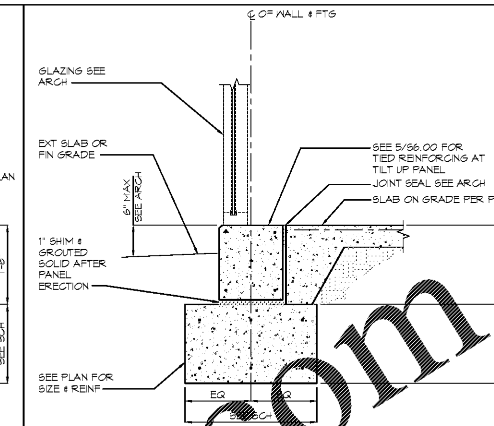

5 WINDOW ON TILT-UP PANEL AT FOOTING

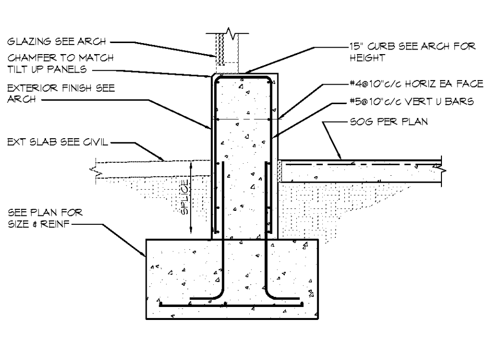

NOTE: SEE 12/S2.01 FOR TURNDOWN SLAB AT DOOR.

6 FTG w/ CURB @ EXTERIOR CURTAIN WALL

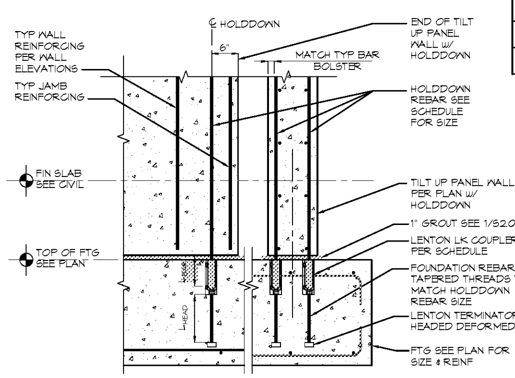

HOLDDOWN SCHEDULE

HOLDDOWN MARK	LENTON COUPLER	HOLDDOWN REBAR	L_{BAR}	L_{HEAD}	NOTE
HD1	LK6	#5 EA FACE	7"	11"	-
HD2	LK6	#5 EA FACE	7"	48"	SEE 8/S2.02

NOTES:
1. INSTALL LENTON LK COUPLER IN ACCORDANCE w/ MANUFACTURERS INSTRUCTIONS AND CODE EVALUATION REPORT ES-0129 PUBLISHED BY IAPMO INCLUDING GROUTING COUPLER WITH LENTON INTERLOK HY10L PREPACKAGED GROUT.
2. PROVIDE TAPERED THREADS FOR FOUNDATION REBAR RECEIVING COUPLER AND LENTON TERMINATOR D6. SCHEDULED LENGTHS DO NOT INCLUDE LENGTH OF TAPERED THREADS.
3. COORDINATE FOUNDATION REBAR AND COUPLERS w/ TILT UP PANEL LOCATIONS AND REINFORCING. SEE 8/S2.01 FOR MISALIGNED COUPLERS AND HOLDDOWN REBAR.

7 TILT-UP PANEL HOLDDOWN SCHEDULE

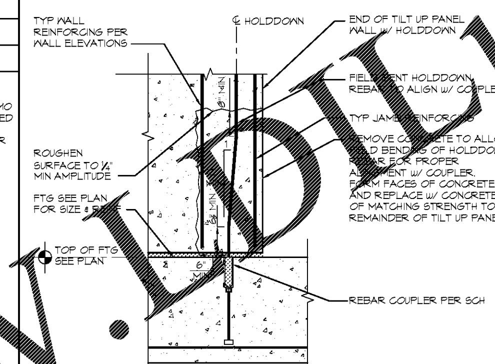

NOTE:
SEE 7/S2.01 FOR REMAINDER OF INFORMATION NOT INDICATED.

8 TILT-UP PANEL HOLDDOWN w/ CORRECTED ALINGMENT

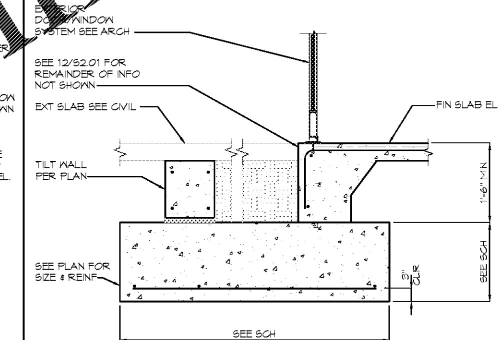

9 TILT-UP PANEL AT EXTERIOR SLAB

BAR			AREA (in^2)	0.11		0.20		0.31		0.44		0.60		0.79		1.00		1.27		1.56	
			DIAMETER (d_b)	0.375		0.500		0.625		0.750		0.875		1.000		1.128		1.270		1.410	
LAP CLASS	CATEGORY	DESCRIPTION	NORMAL WEIGHT CONCRETE f'c (PSI)	#3		#4		#5		#6		#7		#8		#9		#10		#11	
				TOP	BOT.	TOP	BOT.	TOP	BOT.	TOP	BOT.	TOP	BOT.	TOP	BOT.	TOP	BOT.	TOP	BOT.	TOP	BOT.
CLASS "B"	1	COVER ≥ 2d_b & CLR SPC ≥ 4 d_b	3000	21	16	23	18	28	22	34	26	49	38	56	43	63	49	71	55	79	61
			4000	21	16	21	16	25	19	29	23	43	33	49	37	55	42	62	47	68	53
			5000	21	16	18	14	22	17	26	20	38	29	44	34	49	38	55	43	[illegible]	47
	2	ALL OTHERS	3000	28	22	38	29	47	36	56	43	81	63	93	72	105	81	118	91	[illegible]	[illegible]
			4000	25	19	33	25	41	31	49	37	71	54	81	62	91	70	102	79	[illegible]	[illegible]
			5000	21	16	29	23	36	28	44	34	63	49	72	56	81	63	92	71	[illegible]	78
	3	COVER < d_b OR CLR SPC < 2 d_b	3000	-	-	-	-	70	54	84	64	122	94	139	107	157	[illegible]	177	136	196	[illegible]
			4000	-	-	-	-	61	47	73	56	106	81	121	93	[illegible]	[illegible]	[illegible]	[illegible]	170	131
			5000	-	-	-	-	54	42	65	50	95	73	108	[illegible]	122	94	137	[illegible]	152	117

NOTES:
1. TOP BARS ARE HORIZONTAL BARS w/ MORE THAN 12" OF CONCRETE CAST BELOW THE BARS.
2. BOTTOM BARS ARE ALL VERTICAL BARS & HORIZONTAL BARS w/ LESS THAN 12" OF CONCREETE CAST BELOW HORIZONTAL BARS.
3. FOR LIGHTWEIGHT CONCRETE MULTIPLY THE LENGTHS IN THE SCHEDULE BY 1.3.
4. MULTIPLY THE TABULATED SPLICE LENGTHS FOR 2 BAR AND 3 BAR BUNDLES BY 1.20 AND FOR 4 BAR BUNDLES BY 1.33.
5. FOR BUNDLED BARS, AN EFFECTIVE DIAMETER SHALL BE USED FOR DETERMINING COVER & SPACING LIMITATIONS.
FOR 2 BAR BUNDLE, d_b=1.60($\sqrt{\text{INDIVIDUAL BAR AREA}}$)
FOR 3 BAR BUNDLE, d_b=1.95($\sqrt{\text{INDIVIDUAL BAR AREA}}$)
FOR 4 BAR BUNDLE, d_b=2.26($\sqrt{\text{INDIVIDUAL BAR AREA}}$)

10 TYPICAL REINFORCING GRADE 60 SPLICE SCHEDULE

FOOTINGS				AXIAL LOADS		NOTES
MARK	B_{FTG} x H_{FTG}	LONGITUDINAL REINF	TRANSVERSE REINF	DEAD	LIVE	
SF1	4'-0"x2'-0"	7-#7 TOP & BTM	#4@24"c/c TOP & BTM w/ STD HOOKS EA END	20K/FT	10K/FT	
SF2	5'-0"x2'-0"	[illegible] TOP & BTM	#4@24"c/c TOP & BTM w/ STD HOOKS EA END	20K/FT	10K/FT	
SF3	3'-0"x2'-0"	5-#7 TOP & BTM	#4@24"c/c TOP & BTM w/ STD HOOKS EA END	20K/FT	10K/FT	
SF4	6'-0"x2'-0"	10-#7 TOP & BTM	#4@24"c/c TOP & BTM w/ STD HOOKS EA END	20K/FT	10K/FT	

NOTES:
1. AXIAL LOADS INDICATED ARE UNFACTORED SERVICE LEVEL LOADS. LIVE LOADS INDICATED ARE LOADS AS INDICATED ON S1.00 AND CONSIDER BUILDING CODE LIVE LOAD REDUCTIONS AND DO NOT CONSIDER LENGTH OF TIME LOAD IS APPLIED.
2. SEE PLAN FOR FTG LOCATIONS AND ORIENTATIONS.

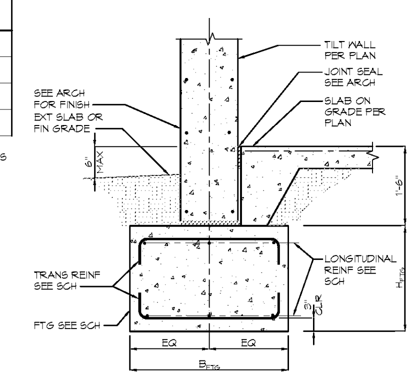

11 TYPICAL STRIP FTG SCHEDULE

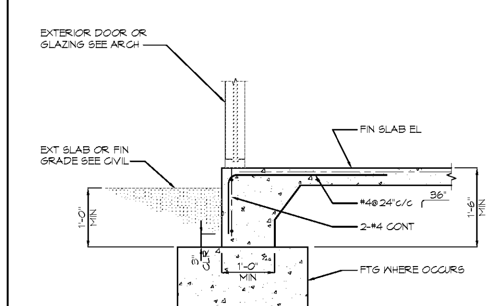

12 EXTERIOR GLAZING AT TURNDOWN SLAB

BAR			AREA (in^2)	0.11		0.20		0.31		0.44		0.60		0.79		1.00		1.27		1.56	
			DIAMETER (d_b)	0.375		0.500		0.625		0.750		0.875		1.000		1.128		1.270		1.410	
DEVELOPMENT TYPE	CATEGORY	DESCRIPTION	NORMAL WEIGHT CONCRETE f'c (PSI)	#3		#4		#5		#6		#7		#8		#9		#10		#11	
				TOP	BOT.	TOP	BOT.	TOP	BOT.	TOP	BOT.	TOP	BOT.	TOP	BOT.	TOP	BOT.	TOP	BOT.	TOP	BOT.
L_d STRAIGHT TENSION DEVELOPMENT LENGTH	1	COVER ≥ 2d_b & CLR SPC ≥ 4 d_b	3000	16	12	18	14	22	17	26	20	38	29	43	33	49	37	55	42	61	47
			4000	16	12	16	12	19	15	23	18	33	25	37	29	42	33	47	37	53	41
			5000	16	12	14	12	17	13	20	16	29	23	34	26	38	29	43	33	47	36
	2	ALL OTHERS	3000	22	17	29	22	36	28	43	33	63	48	72	55	81	62	91	70	101	78
			4000	19	15	25	19	31	24	37	29	54	42	62	48	70	54	79	61	87	67
			5000	19	15	23	17	28	22	34	26	49	38	56	43	63	48	71	54	78	60
	3	COVER < d_b OR CLR SPC < 2 d_b	3000	-	-	-	-	54	42	65	50	94	72	107	83	121	93	136	105	151	116
			4000	-	-	-	-	47	36	56	43	81	63	93	72	105	81	118	91	131	101
			5000	-	-	-	-	42	32	50	39	73	56	83	64	94	72	106	81	117	90
HOOK EMBEDMENT	STANDARD	ALL OTHERS	3000	6		8		10		12		14		16		18		20		22	
			4000	6		7		9		10		12		14		16		17		19	
			5000	6		6		8		9		11		12		14		16		17	

NOTES:
1. SEE 11/S2.01 FOR DETAILS.

13 TYP STRAIGHT & HOOKED DEVELOPMENT LENGTH SCHEDULE

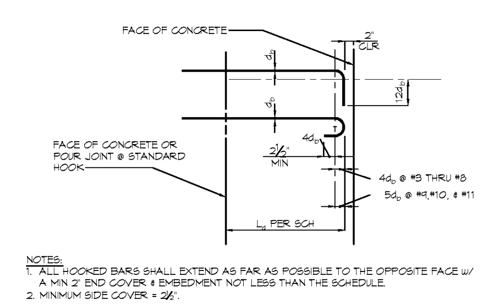

NOTES:
1. ALL HOOKED BARS SHALL EXTEND AS FAR AS POSSIBLE TO THE OPPOSITE FACE w/ A MIN 2" END COVER & EMBEDMENT NOT LESS THAN THE SCHEDULE.
2. MINIMUM SIDE COVER = 2½".

14 TYP HOOK DETAILS

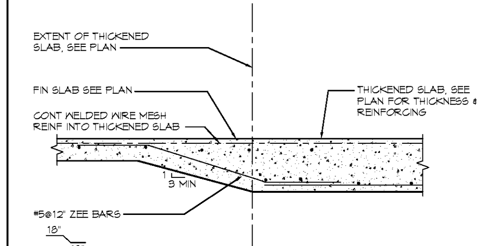

NOTE:
SEE 12/S2.00 WHERE HOUSEKEEPING PADS OCCUR. COORDINATE WITH ARCH PLANS AND MEP PLANS THE LOCATIONS OF HOUSEKEEPING PADS.

15 TYPICAL THICKENED SLAB DETAIL

TRENT E. LATTA LICENSE No 86173 STATE OF FLORIDA PROFESSIONAL ENGINEER 11/12/19

PRM MEDICAL OFFICE BUILDING
NAPLES, FLORIDA

THIS DOCUMENT CONTAINS INFORMATION THAT IS PROPRIETARY TO DAVIS, STOKES COLLABORATIVE, P.C. THIS DOCUMENT AND/OR IT'S CONTENTS MAY NOT BE REPRODUCED OR DISCLOSED TO OTHERS, EITHER IN WHOLE OR IN PART, WITHOUT THE PRIOR WRITTEN CONSENT OF DAVIS, STOKES COLLABORATIVE, P.C. COPYRIGHT 2018, ALL RIGHTS RESERVED

DAVIS STOKES COLLABORATIVE P.C.
DSC ARCHITECTS
7121 CROSSROADS BLVD.
BRENTWOOD, TN 37027
TEL: (615) 726-0010
MAIL: dscinfo@dsccol.com
WEB: www.dsccol.com

REVISIONS		
NO.	DATE	DESCRIPTION

FOUNDATION SECTIONS & DETAILS

S2.01

ISSUE DATE:	JOB NUMBER
11. 12. 19	19020

Order Plans @ WWW.LDILine.com