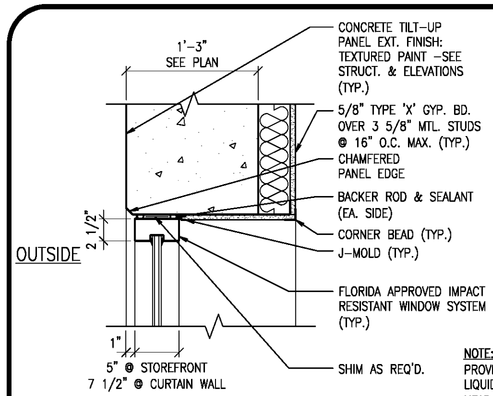

WH-1

NOTE:
PROVIDE "BASF MAXFLASH" LIQUID FLASHING MEMBRANE AT HEAD/JAMB/SILL OF ALL EXTERIOR WINDOW OPENINGS

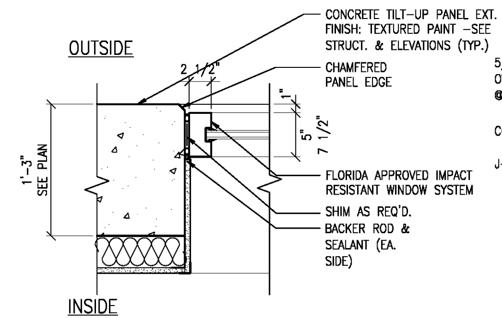

WJ-1

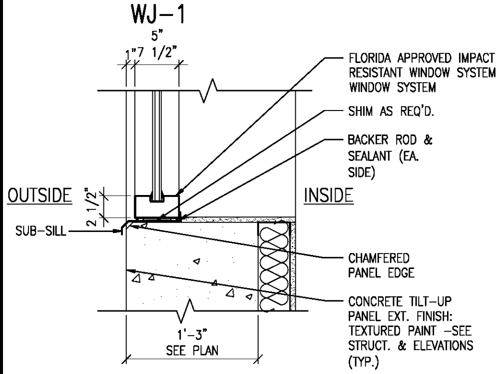

WS-1

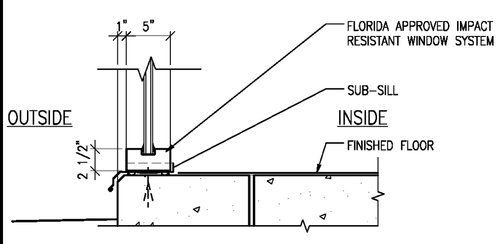

WS-2

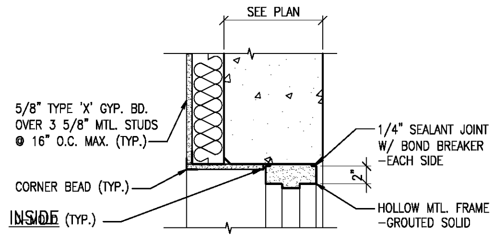

H-2

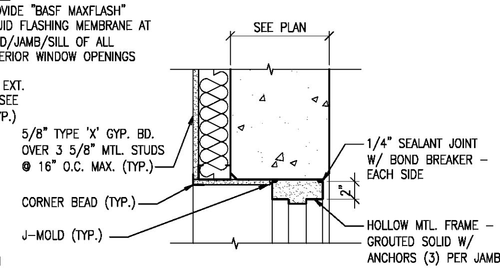

J-2

NOTE:
SEE PLANS AND SECTIONS FOR INTERIOR WALL FURRING ON EXTERIOR WALL LOCATIONS

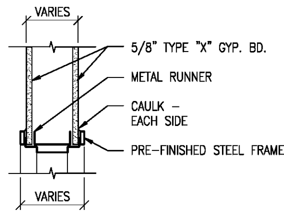

H-1

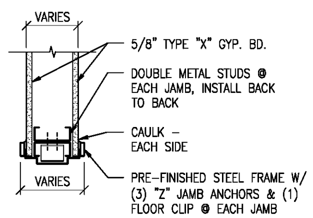

J-1

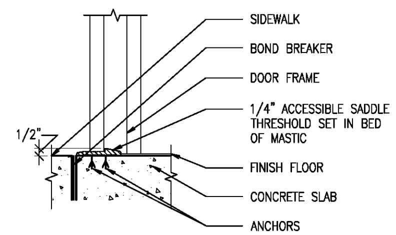

S-1

DOOR SCHEDULE

DOOR NUMBER	TYPE	WIDTH	HEIGHT 8'-3 1/2"	HEIGHT 7'-0"	ALUMINUM	HOLLOW METAL	SOLID CORE WOOD	INSUL./TEMPERED GLASS	WIRED GLASS	RATING: D LABEL 60 MINS.	RATING: C LABEL 45 MINS.	RATING: B LABEL 90 MINS.	FRAME: TYPE	FRAME: HOLLOW METAL	FRAME: ALUMINUM	DETAILS: HEAD	DETAILS: JAMB	DETAILS: SILL	THRESHOLD	3/4" UNDERCUT	HARDWARE SET NUMB.	DOOR NUMBER	REMARKS
100	FG	12'-0"	●		●								H		●	–	–	–			1.0	100	AUTOMATIC SLIDING DOOR, CARD READER
101	F	3'-0"		●			●						F-1	●		H-1	J-1	–		●	13.0	101	
102	F	3'-0"		●			●						F-1	●		H-1	J-1	–		●	13.0	102	
103	FG	3'-8"		●	●			●					T2		●	–	–	S-1	●		2.0	103	CARD READER
104	F	3'-0"		●			●						F-1	●		H-1	J-1	–			11.0	104	
105	F	3'-0"		●			●						F-1	●		H-1	J-1	–		●	10.0	105	
106	F	3'-8"		●		●							F-1	●		–	–	S-1	●		3.1	106	CARD READER
107	N	3'-8"		●		●			●			●	F-1	●		H-2	J-2	–			5.1	107	
108	FG	3'-8"		●	●			●					FF		●	–	–	S-1	●		3.0	108	
110	F	3'-0"		●			●						F-1	●		H-1	J-1	–			[illegible]	110	
111	F	3'-0"		●			●						F-1	●		H-1	J-1	–			[illegible]	111	
112A	FG	3'-8"		●	●			●					M		●	–	–	S-1	●		[illegible]	112A	CARD READER
112B	F	3'-0"		●			●						F-1	●		H-1	J-1	–			[illegible]	112B	
113	F	3'-8"		●		●							F-1	●		–	–	S-1	●		3.1	113	CARD READER
114	FG	3'-8"		●	●			●					M		●	–	–	S-1	●		4.0	114	
116A	FG	3'-8"		●	●			●					L		●	–	–	S-1	●		2.0	116A	CARD READER
116B	F	3'-0"		●			●						F-1	●		H-1	J-1	–			8.0	116B	
117	F	3'-0"		●			●						F-1	●		H-1	J-1	–			8.0	117	
120A	FG	3'-8"		●	●			●					S		●	–	–	S-1	●		2.0	120A	CARD READER
120B	F	3'-0"		●			●						F-1	●		H-1	J-1	–			8.0	120B	
200	N	3'-8"		●			●					●	F-1	●		H-2	J-2	–			5.0	200	
201	F	3'-0"		●			●						F-1	●		H-1	J-1	–		●	12.0	201	
202	F	3'-0"		●			●						F-1	●		H-1	J-1	–		●	12.0	202	
203	F	3'-0"		●			●						F-1	●		H-1	J-1	–		●	10.0	203	
205	N	3'-8"		●			●					●	F-1	●		H-2	J-2	–			5.0	205	
206	F	3'-0"		●			●						F-1	●		H-1	J-1	–			9.0	206	
207	F	3'-0"		●			●						F-1	●		H-1	J-1	–			6.0	207	
208	N	3'-8"		●			●					●	F-1	●		H-2	J-2	–			5.0	208	
209	F	3'-0"		●			●						F-1	●		H-1	J-1	–			8.0	209	
210	F	3'-0"		●			●						F-1	●		H-1	J-1	–			8.0	210	
211	F	3'-0"		●			●						F-1	●		H-1	J-1	–			8.0	211	
212	F	3'-0"		●			●						F-1	●		H-1	J-1	–			8.0	212	
213	F	3'-0"		●			●						F-1	●		H-1	J-1	–			8.0	213	
300	N	3'-8"		●			●					●	F-1	●		H-2	J-2	–			5.0	300	
301	F	3'-0"		●			●						F-1	●		H-1	J-1	–		●	12.0	301	
302	F	3'-0"		●			●						F-1	●		H-1	J-1	–		●	12.0	302	
303	F	3'-0"		●			●						F-1	●		H-1	J-1	–		●	10.0	303	
305	N	3'-8"		●			●					●	F-1	●		H-2	J-2	–			5.0	305	
306	F	3'-0"		●			●						F-1	●		H-1	J-1	–			9.0	306	
307	F	[illegible]		●			●						F-1	●		H-1	J-1	–			6.0	307	
308	[illegible]	[illegible]		●			●					●	F-1	●		H-2	J-2	–			5.0	308	
309	F	[illegible]		●			●						F-1	●		H-1	J-1	–			8.0	309	
310	F	[illegible]		●			●						F-1	●		H-1	J-1	–			8.0	310	
311	[illegible]	3'-0"		●			●						F-1	●		H-1	J-1	–			8.0	311	
312	F	3'-0"		●			●						F-1	●		H-1	J-1	–			8.0	312	
313	F	3'-0"		●			●						F-1	●		H-1	J-1	–			8.0	313	
400	N	3'-8"		●			●					●	F-1	●		H-2	J-2	–			5.0	400	
401	F	3'-0"		●			●						F-1	●		H-1	J-1	–		●	12.0	401	
402	F	3'-0"		●			●						F-1	●		H-1	J-1	–		●	12.0	402	
403	F	3'-0"		●			●						F-1	●		H-1	J-1	–		●	10.0	403	
405	N	3'-8"		●			●					●	F-1	●		H-2	J-2	–			5.0	405	
406	F	3'-0"		●			●						F-1	●		H-1	J-1	–			9.0	406	
407	F	3'-0"		●			●						F-1	●		H-1	J-1	–			6.0	407	
408	N	3'-8"		●			●					●	F-1	●		H-2	J-2	–			5.0	408	
409	F	3'-0"		●			●						F-1	●		H-1	J-1	–			8.0	409	
410	F	3'-0"		●			●						F-1	●		H-1	J-1	–			8.0	410	
411	F	3'-0"		●			●						F-1	●		H-1	J-1	–			8.0	411	
412	F	3'-0"		●			●						F-1	●		H-1	J-1	–			8.0	412	
413	F	3'-0"		●			●						F-1	●		H-1	J-1	–			8.0	413	

DOOR TYPES ABREVATIONS

ALUM. – ALUMINUM
H.M. – HOLLOW METAL
SCW – SOLID CORE WOOD
HCW – HOLLOW CORE WOOD
WPL – WOOD W/ PLASTIC LAM.

TG – TEMPERED GLASS
ITG – INSUL./TEMPERED GLASS
WG – WIRED GLASS
DE – DOUBLE EGRESS

GENERAL NOTES:

1.) ALL DOOR NUMBERS ON SCHEDULE MAY NOT HAVE BEEN USED.
2.) FRAME TYPES AND DOOR TYPE ELEVATIONS ARE FOR REFERENCE ONLY. ALL TYPES MAY NOT BE USED. REFER TO DOOR SCHEDULE.
3.) ALL DOORS 1 3/4" THICK UNLESS OTHERWISE NOTED.
4.) ALL HOLLOW METAL FRAMES TO BE CONT. WELDED AND GROUND.

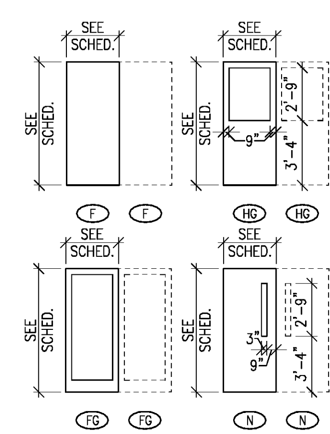

DOOR TYPES

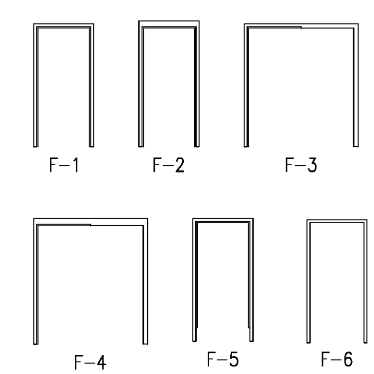

FRAME TYPES

0 3" 6" 12"

DRAWING CREATED: - 10/28/2019 11:14 AM
LAST DRAWING UPDATE: - 11/11/2019 8:43 AM
PLOT DATE: - 5/29/2008 11:03 AM
FILE NAME: - 19020_A701.dwg
SCALE FACTOR: - 1:8

A-NOTE A-NAME A-PATT A-GRID A-GRAP A-EXST
BLACK BLACK BLACK BLACK BLACK BLACK
A7.0x A7.0x BLK

STATE OF FLORIDA WILLIE D. STOKES AR0011691 REGISTERED ARCHITECT /19

PRH
MEDICAL OFFICE BUILDING
NAPLES, FLORIDA

THIS DOCUMENT CONTAINS INFORMATION THAT IS PROPRIETARY TO DAVIS, STOKES COLLABORATIVE, P.C. THIS DOCUMENT AND/OR IT'S CONTENTS MAY NOT BE REPRODUCED OR DISCLOSED TO OTHERS, EITHER IN WHOLE OR IN PART, WITHOUT THE PRIOR WRITTEN CONSENT OF DAVIS, STOKES COLLABORATIVE, P.C. COPYRIGHT 2018, ALL RIGHTS RESERVED

DAVIS STOKES COLLABORATIVE P.C.
DSC ARCHITECTS
7121 CROSSROADS BLVD
BRENTWOOD, TN 37027
TEL (615) 726-0010
MAIL dscinfo@dscaci.com
WEB www.dscaci.com

REVISIONS

NO.	DATE	DESCRIPTION

DOOR SCHEDULE

A7.01

ISSUE DATE: 11.12.19 JOB NUMBER 19020

Order Plans @ WWW.LDIILine.com