16

12

8

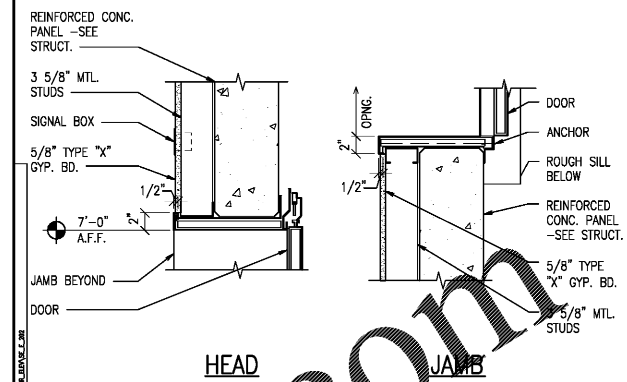

4 ELEVATOR HEAD & JAMB

0 3" 6" 12"

15

11

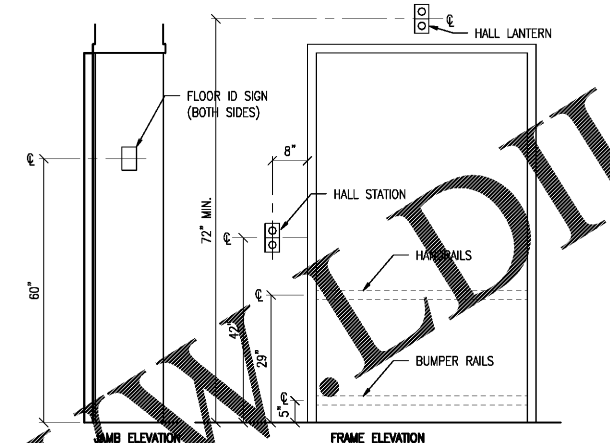

7 ELEVATOR JAMB & FRAME ELEVATION

0 3" 6" 12"

3

14

10

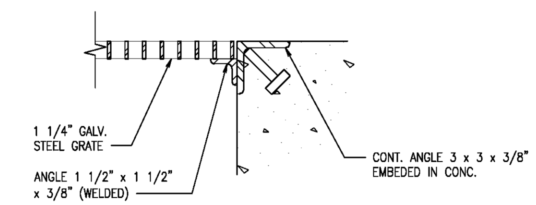

6 SUMP PIT COVER

0 3" 6" 12"

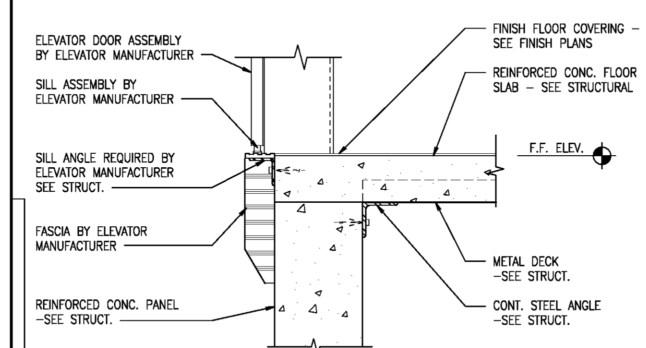

2 ELEVATOR SILL @ INTERMEDIATE FLOOR

0 3" 6" 12"

13

9

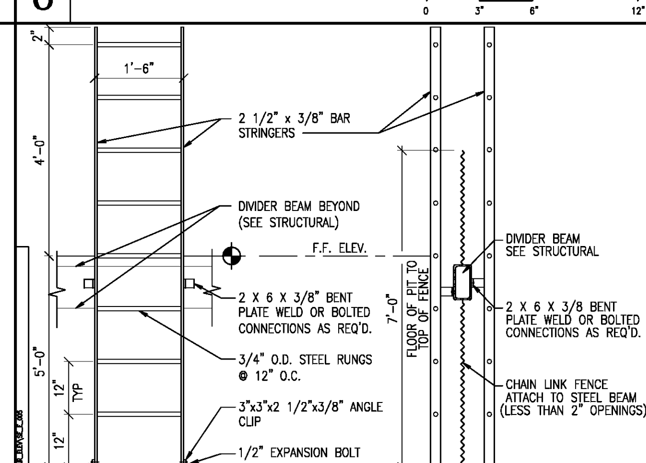

5 PIT LADDER

0 3" 6" 12"

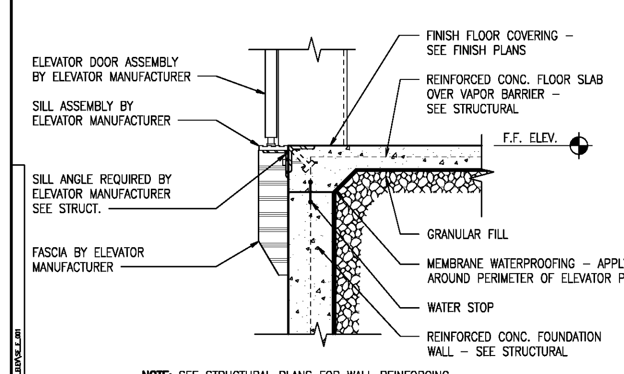

NOTE: SEE STRUCTURAL PLANS FOR WALL REINFORCING

1 TYPICAL ELEVATOR SILL @ PIT

0 3" 6" 12"

DRAWING CREATED: – 10/28/2019 10:05 AM
LAST DRAWING UPDATE: – 10/29/2019 1:00 PM
PLOT DATE: – 5/29/2008 11:03 AM
FILE NAME: – 19020_A252.dwg
SCALE FACTOR: – 1:8

A-NOTE	A-NOTE	BLACK
A-NAME	A-NAME	BLACK
A-PATT	A-PATT	BLACK
A-GRID	A-GRID	BLACK
A-GRAP	A-GRAP	BLACK
A-EXST	A-EXST	BLACK
A2.5x	A2.5x	BLK

STATE OF FLORIDA · WILLIE D. STOKES · AR0011691 · REGISTERED ARCHITECT

PRH MEDICAL OFFICE BUILDING

NAPLES, FLORIDA

THIS DOCUMENT CONTAINS INFORMATION THAT IS PROPRIETARY TO DAVIS, STOKES COLLABORATIVE, P.C. THIS DOCUMENT AND/OR IT'S CONTENTS MAY NOT BE REPRODUCED OR DISCLOSED TO OTHERS, EITHER IN WHOLE OR IN PART, WITHOUT THE PRIOR WRITTEN CONSENT OF DAVIS, STOKES COLLABORATIVE, P.C. COPYRIGHT 2018, ALL RIGHTS RESERVED

DAVIS STOKES COLLABORATIVE P.C.
DSC ARCHITECTS
7121 CROSSROADS BLVD
BRENTWOOD, TN 37027
TEL (615) 726-0010
MAIL dscinfo@dscaai.com
WEB www.dscaai.com

REVISIONS

NO.	DATE	DESCRIPTION

ELEVATOR DETAILS

A2.52

ISSUE DATE:	JOB NUMBER
11.12.19	19020

Order Plans @ WWW.LDILine.com