TYPE I EXHAUST DUCTWORK

GREASE DUCT & CHIMNEY SPECIFICATIONS:
PROVIDE GREASE DUCT EQUAL TO CAPTIVEAIRE SYSTEMS MODEL "DW" ROUND 20 GAUGE 430 STAINLESS STEEL DUCTWORK. MODEL "DW" IS LISTED TO UL–1978 AND IS INSTALLED USING "V" CLAMP LOCKING CONNECTIONS SEALED WITH 3M FIRE BARRIER 2000 PLUS. MODEL "DW" DOES NOT REQUIRE WELDING PROVIDING IT HAS BEEN INSTALLED PER THE MANUFACTURES INSTALLATION GUIDE.
PROVIDE RATED ACCESS DOORS AT EVERY CHANGE IN DIRECTION AND EVERY 12' ON CENTER. PER MANUFACTURES LISTING MODEL "DW" HORIZONTAL RUNS LESS THAN 75 FT. CAN BE SLOPED 1/16" PER 12", HORIZONTAL RUNS MORE THAN 75 FT. CAN BE SLOPED 3/16" PER 12".
DUCT SHOULD BE SLOPED AS MUCH AS POSSIBLE TO REDUCE THE CHANCE OF GREASE ACCUMULATION IN HORIZONTAL RUNS.

IF THE DUCT OR CHIMNEY IS WITHIN 18 INCHES OF COMBUSTIBLE MATERIAL, INSULATE WITH UL LISTED GREASE EXHAUST DUCT WRAP. SEE GREASE EXHAUST DUCT SPECIFICATION AND DETAIL THIS SHEET.

CUSTOMER APPROVAL TO MANUFACTURE:

Approved as Noted ☐
Approved with NO Exception Taken ☐
Revise and Resubmit ☐
SIGNATURE ____________
Your Title ____________ Date ____________

CLEARANCE TO COMBUSTIBLES			
DIAMETER	COMBUSTIBLES	LIMITED COMBUSTIBLES	NON COMBUSTIBLES
8"	18"	3"	0"
10"	18"	3"	0"
12"	18"	3"	0"
14"	18"	3"	0"
16"	18"	3"	0"
18"	18"	3"	0"
20"	18"	3"	0"
24"	18"	3"	0"

Thermal Ceramics
FireMaster® FastWrap XL
Commercial Kitchen Grease Duct Enclosure System
Air Ventilation Duct Enclosure System
2 Hour Shaft Alternative / Zero Clearance to Combustibles

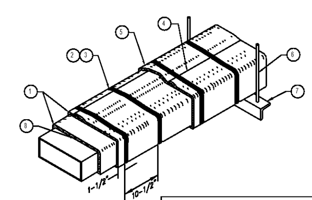

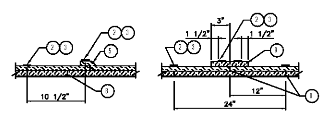

BUTT-JOINT/3"OVERLAP
BUTT-JOINT/COLLAR
DUAL LAYER INSTALLATION DETAIL

LEGEND	
1	Two Layers of FireMaster FastWrap XL Blanket for Grease Duct Enclosures
2	Filament tape
3	Steel banding
4	3" longitudinal overlap
5	3" transverse overlap
6	Min. 3/8" diameter hanger rod
7	2" x 2" x 1/8" angle
8	1" compressed butt joint
9	6" wide FireMaster FastWrap XL collar

GREASE DUCT SPECIFICATION

Furnish single-wall, factory built, grease duct for use with Type I kitchen hoods, which conforms to the requirements of NFPA-96; CAPTIVEAIRE or approved equal. Products shall be ETL listed to the UL-1978 standard for venting air and grease vapors from commercial cooking operations as described in NFPA-96.

The duct wall shall be constructed of .036" thick type 430 stainless steel and be available in diameters of 8" to 24". The grease duct termination at the fan shall be fully welded to a fan adapter plate (where applicable) and the adapter plate shall be fastened to the curb using a suitably sized fastener provided by others. See Detail A

The duct shall be listed with 18" clearance to combustible materials, 3" clearance to limited combustible materials and 0" clearance to non-combustible materials. Combustible materials are to be defined by the authority having jurisdiction.

In cases where the duct distance to combustible materials is less than specified above, insulate duct with flexible, high temperature insulation UL Listed for 2 hour fire rated duct enclosure protection and for zero clearance for kitchen exhaust ducts, Thermal Ceramics FireMaster FastWrap XL (ref. ICC-ES Evaluation Report ESR-2213). System shall be installed in 2 layers per the manufacturer's instructions for 2 hour fire rated duct enclosure protection and permitting zero clearance to combustibles. See Details B & C

Grease duct joints shall be held together by means of formed vee clamps and sealed with *3M Fire Barrier 2000+*. Screws used to secure the vee clamps shall be of the hex-head type with flanged stops and tapered "lead in" threads for easy starting. Nuts shall be retained by means of a free-floating cage to allow easy alignment. A continuous bead of sealant is to be applied to the duct flange to flange connection, as well as to the "V" groove of the vee clamp. See Detail D

Single-Wall Grease Duct shall be installed in accordance with the manufacturer's *"Installation, Operation and Maintenance Manual"*, ETL listing and state and local codes. Grease duct installed outside of the building shall be protected against accidental damage or vandalism. Support vertically installed grease duct from the building structure using rigid structural supports. Anchor supports to the structure by welding or bolting steel expansion anchors or concrete inserts. Support horizontally installed grease duct from the building structure using above method or use *Duct Mate, Wire Rope & Clutchers*, part numbers WR20 & CL20. 1/2" Threaded rod and saddles may also be used for the support of horizontal grease duct. Fans shall be supported independently from the grease duct sections. Protect grease duct from twisting or movement caused by fan torque or vibration.

Grease duct installations require provisions for cleaning the interior of the duct. NFPA cleanout
requirements are as follows:
1. A cleanout must be provided at each change of direction except where the entire length of duct can be inspected and cleaned from either the hood or the discharge end.
2. On horizontal duct runs, at least one 20" diameter opening must be provided. Where the opening is smaller than 20" diameter, openings large enough to permit cleaning must be provided at intervals of no more than 12'.
3. Openings must be at the side or the top, whichever is more accessible. When the opening is on the side of the duct, the lower edge of the opening must be at least 1 ½" above the bottom of the duct. For listed grease duct, this is accomplished by the use of the grease manifold tee and cleanout cap. See Detail E
4. On vertical duct runs where personnel entry is possible, access must be from the top of the riser. Where entry is not possible, access must be provided at each floor.

CAPTIVEAIRE

JOB Jersey Mike's Subs	
LOCATION High Point, NC	
DATE 11/4/19	*JOB #* 4046725
DWG # 9	*DRAWN BY* DL–32
REV.	*SCALE* Not To Scale

KEH–2 BREAD OVEN HOOD (BACK WALL)

MODEL	LENGTH	MAX. COOKING TEMP.	EXHAUST PLENUM								HOOD CONSTRUCTION	HOOD CONFIG.		SWITCHES		HOOD HANGING WGHT
			TOTAL EXH. CFM	RISER(S) WIDTH	LENG.	HEIGHT	DIA.	CFM	S.P.			END TO END	ROW	QUANTITY	LOCATION	
6024 VHB–ND	3' 9.00"	700 Deg.	375	6"	7"	4"		375	–0.062"		430 SS 100%	ALONE	ALONE	1 FAN	FRONT RIGHT FACE	214 LBS

HOOD OPTIONS

HOOD NO.	TAG	OPTION
3		FIELD WRAPPER 12.00" High Front, Left, Right (VERIFY CEILING HEIGHT BEFORE ORDERING)
		BACKSPLASH 84.00" High X 45.00" Long 430 SS Vertical

VERIFY CEILING HEIGHT
___' ___"
Height required to verify that the hood will fit and to size the enclosure panels

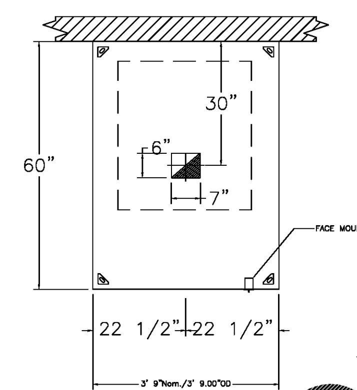

PLAN VIEW – BREAD OVEN HOOD
3' 9.00" LONG 6024VHB–ND

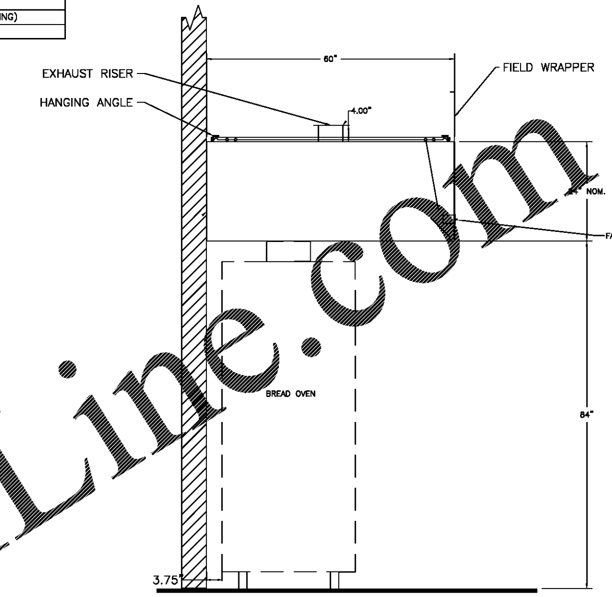

SECTION VIEW – MODEL 6024VHB–ND
BREAD OVEN HOOD

NOTE:
EXHAUST FAN IS SIZED FOR A MAXIMUM OF (3) 90 DEGREE RADIUS ELBOWS AND 25 FT OF STRAIGHT DUCTWORK. PLEASE CONSULT CAPTIVEAIRE IF DUCTWORK EXCEEDS THE ABOVE REQUIREMENTS.

ETL LISTING DESCRIPTION BLOCK
THE CAPTIVE AIRE MODEL VHB HAS BEEN ULL. 710 TESTED, LISTED AND APPROVED TO EXHAUST A MINIMUM OF 150 CFM PER LINEAR FOOT OVER 700 DEGREE COOKING EQUIPMENT

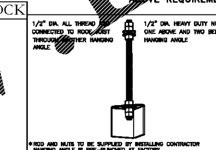

HANGING ANGLE DETAIL

CAPTIVEAIRE

JOB Jersey Mike's Subs	
LOCATION High Point, NC	
DATE 11/4/19	*JOB #* 4046725
DWG # 10	*DRAWN BY* DL–32
REV.	*SCALE* Not To Scale

KEF–2 BREAD OVEN FAN

EXHAUST FAN INFORMATION

FAN UNIT NO.	TAG	FAN UNIT MODEL #	CFM	ESP.	RPM	H.P.	B.H.P.	ø	VOLT	FLA	WEIGHT (LBS.)	SONES
1		DU12HFA	375	0.500	1404	0.180	0.1220	1	115	1.9	54	7.9

FAN OPTIONS

FAN UNIT NO.	TAG	OPTION (Qty. – Descr.)
1		1 – I 12–BDD Damper

CURB ASSEMBLIES

NO.	ON FAN	WEIGHT	ITEM	SIZE
1	# 1	31 LBS	Curb	17.500"W x 17.500"L x 26.000"H

FEATURES:
– DIRECT DRIVE CONSTRUCTION (NO BELTS/PULLEYS)
– ROOF MOUNTED FANS
– UL705
– VARIABLE SPEED CONTROL
– INTERNAL WIRING
– WEATHERPROOF DISCONNECT
– THERMAL OVERLOAD PROTECTION (SINGLE PHASE)

NORMAL TEMPERATURE TEST
EXHAUST FAN MUST OPERATE CONTINUOUSLY WHILE EXHAUSTING AIR AT 300°F (149°C) UNTIL ALL FAN PARTS HAVE REACHED THERMAL EQUILIBRIUM, AND WITHOUT ANY DETERIORATING EFFECTS TO THE FAN WHICH WOULD CAUSE UNSAFE OPERATION.

ABNORMAL FLARE–UP TEST
EXHAUST FAN MUST OPERATE CONTINUOUSLY WHILE EXHAUSTING BURNING GREASE VAPORS AT 600°F (316°C) FOR A PERIOD OF 15 MINUTES WITHOUT THE FAN BECOMING DAMAGED TO ANY EXTENT THAT COULD CAUSE AN UNSAFE CONDITION.

FAN #1 DU12HFA – EXHAUST FAN

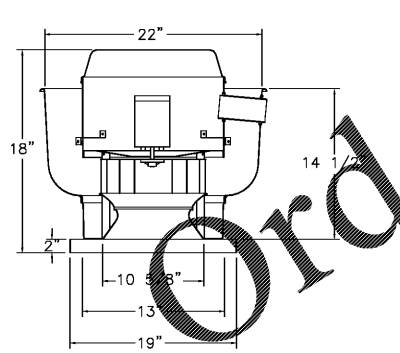

VERIFY ROOF PITCH

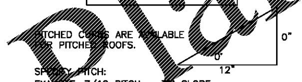

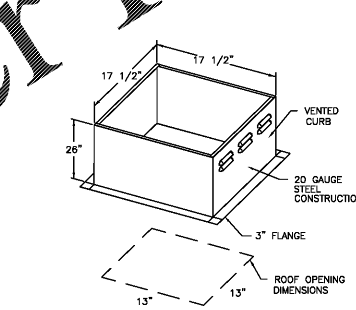

BACKDRAFT DAMPER INSTALLATION

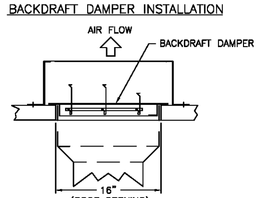

CAPTIVEAIRE

JOB Jersey Mike's Subs	
LOCATION High Point, NC	
DATE 11/4/19	*JOB #* 4046725
DWG # 11	*DRAWN BY* DL–32
REV.	*SCALE* Not To Scale

THE CONTENTS OF THIS DRAWING WILL REMAIN THE PROPERTY OF THOMAS F. TEDROW, AIA. IT'S CONTENTS, INCLUDING ALL INFORMATION, SHALL NOT BE REPRODUCED USING ANY MEANS WITHOUT EXPRESSED WRITTEN CONSENT AND/OR PERMISSION FROM THOMAS F. TEDROW, AIA

THOMAS F. TEDROW, AIA
ARCHITECT
2866 ADAMS BROOK WAY
SNELLVILLE, GA 30078
PH. 678.777.9548
E-MAIL: tom.tedrow@tedrowdesign.com

JERSEY MIKE'S
THE PALLADIUM SHOPPING CENTER
4117 BRIAN JORDAN PLACE
HIGH POINT, NC 27265

NORTH CAROLINA PROFESSIONAL SEAL 31265 ENGINEER KEITH S. MIKULKA
11-04-19
ARCHITECT/ENGINEER STAMP

REV. NO.	DATE	DESCRIPTION

PROJECT NO: JMNC-200
DRAWN BY: SW
CHECKED BY: KM
ISSUE DATE: 11/04/19

HOOD AND FAN DETAILS-3

GRAYP
Ray Group Consulting Engineers, Inc.
1827 Powers Ferry Road
Building 20, Suite 100
Atlanta, Georgia 30339
Tel. (770) 953-1443
Fax. (770) 953-9533

H1.04

Order Plans @ WWW.LDILine.com