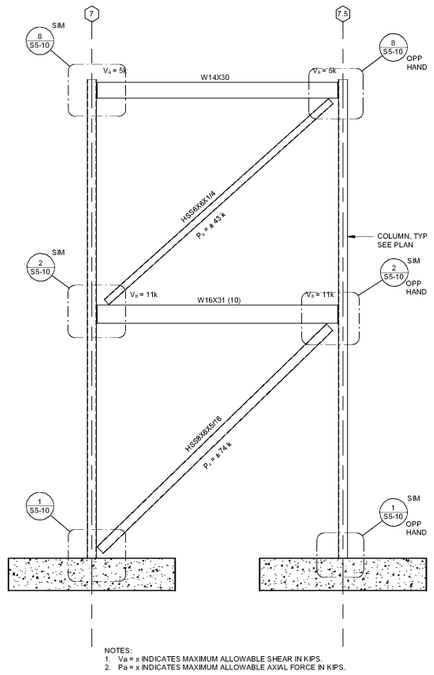

NOTES:
1. Va = x INDICATES MAXIMUM ALLOWABLE SHEAR IN KIPS.
2. Pa = x INDICATES MAXIMUM ALLOWABLE AXIAL FORCE IN KIPS.

15 S5-07 BRACED FRAME ALONG GL K.7 - PART B
1/4" = 1'-0"

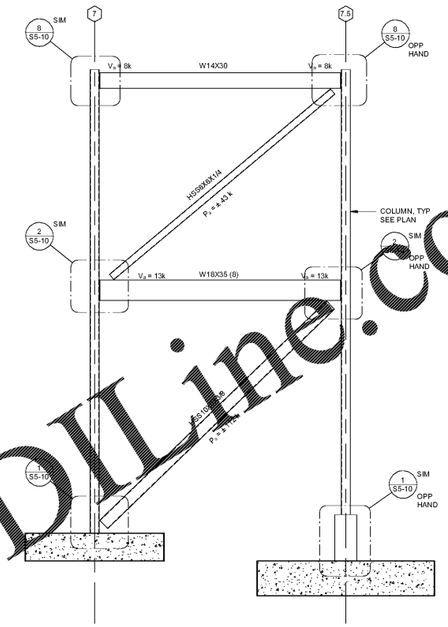

NOTES:
1. Va = x INDICATES MAXIMUM ALLOWABLE SHEAR IN KIPS.
2. Pa = x INDICATES MAXIMUM ALLOWABLE AXIAL FORCE IN KIPS.

4 S5-07 BRACED FRAME ALONG GL J.1 - PART B
1/4" = 1'-0"

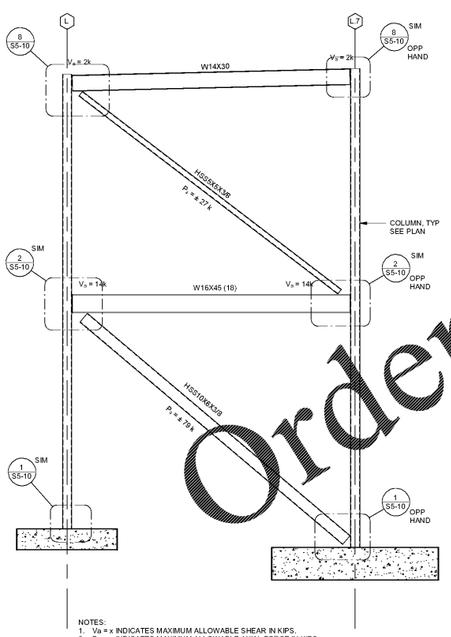

NOTES:
1. Va = x INDICATES MAXIMUM ALLOWABLE SHEAR IN KIPS.
2. Pa = x INDICATES MAXIMUM ALLOWABLE AXIAL FORCE IN KIPS.

17 S5-07 BRACED FRAME ALONG GL 7 - PART B
1/4" = 1'-0"

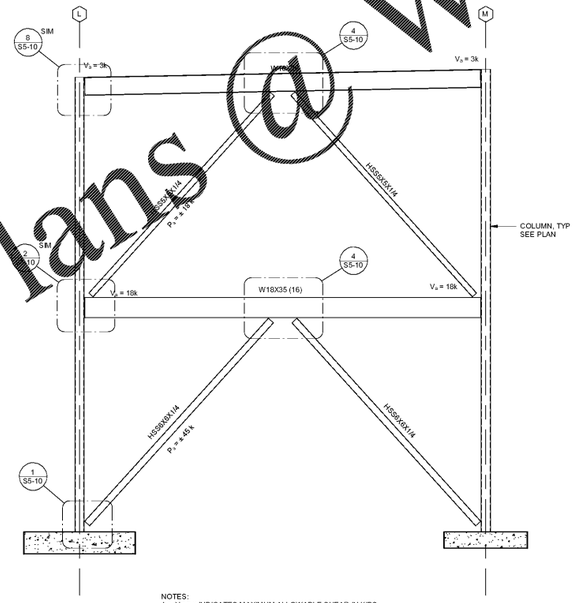

NOTES:
1. Va = x INDICATES MAXIMUM ALLOWABLE SHEAR IN KIPS.
2. Pa = x INDICATES MAXIMUM ALLOWABLE AXIAL FORCE IN KIPS.

13 S5-07 BRACED FRAME ALONG GL 4 - PART B
1/4" = 1'-0"

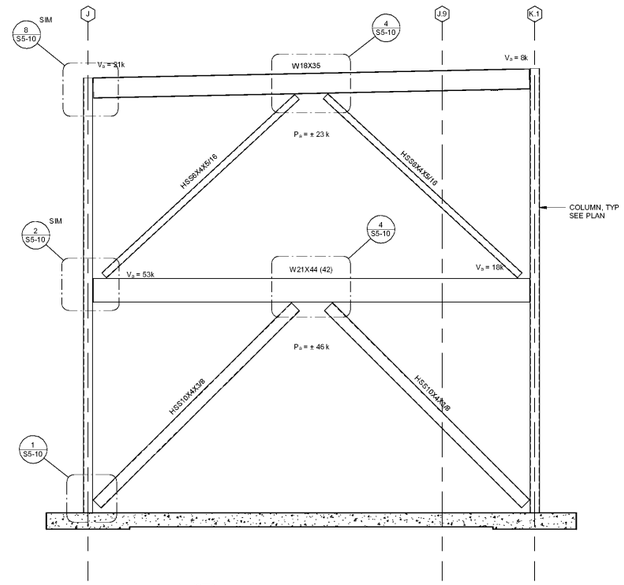

NOTES:
1. Va = x INDICATES MAXIMUM ALLOWABLE SHEAR IN KIPS.
2. Pa = x INDICATES MAXIMUM ALLOWABLE AXIAL FORCE IN KIPS.

5 S5-07 BRACED FRAME ALONG GL 1 - PART B
1/4" = 1'-0"

Order Plans @ WWW.LDILine.com

One Piedmont Center, Suite 303 3565 Piedmont Road Atlanta, Georgia 30305

Smallwood, Reynolds, Stewart & Associates, Inc. Architects

REVISIONS / PRINTED

REV. NO.	DATE	REMARKS
	06.18.19	GDOE CHECK SET
	10.01.19	ISSUED FOR BID/PERMIT/GDOE FINAL

INSTRUCTIONAL UNITS

REGULAR CLASSROOMS	45
PAIRED FLEX AREAS	2
MUSIC	1
PHYSICAL EDUCATION	1
MEDIA CENTER	1
ART	1
TOTAL	51

BUILDING AREA

LEVEL 01	71,152 SF
LEVEL 02	37,379 SF
TOTAL	108,531 SF

COVERED AREAS (I.E. CANOPIES)

COVERED AREAS	5,196 SF
DIVIDE (-) BY 2	-2
TOTAL	2,598 SF

PROJECT SUMMARY

NAME: JH HOUSE ELEMENTARY SCHOOL
GRADES: PREK THRU 5TH
F.T.E.: 800
G.D.O.E. #: TO BE ASSIGNED

RCPS

GEORGIA REGISTERED No. 0000 ENGINEER HOLLY C. JEFFREYS

© COPYRIGHT 2018 SMALLWOOD, REYNOLDS, STEWART, STEWART & ASSOCIATES, INC.
THIS DRAWING IS THE PROPERTY OF THE ARCHITECT AND MAY NOT BE REPRODUCED OR USED WITHOUT THEIR WRITTEN PERMISSION

FRAMING DETAILS

J.H. HOUSE ELEMENTRY SCHOOL
3100 Zingara Road NE, Conyers, GA 30012

DATE 10.01.2019
JOB NO. 218036.00
SHEET NO. S5-07

ISSUED FOR CONSTRUCTION