CATCH BASIN GRATE & FRAME

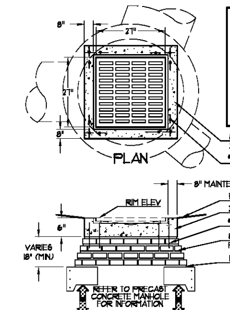

APPROVED GRATES

27"x27" DRAIN GRATE
CATALOG# R-4852
ANGLE FRAME # R-4899
NEENAH FOUNDRY COMPANY

27"x27" CATCH BASIN INLET
CATALOG# 5115 (TYPE M2)
W/ ANGLE FRAME
EAST JORDAN IRON WORKS
1-800-MAN-HOLE

27⅛"x27⅛" DRAIN GRATE
CATALOG# USF 6217
FRAME# USF 4609
U.S. FOUNDRY & MAN. CORP.
1-800-636-6386

DRAIN GRATES SHALL HAVE A MINIMUM OPENING OF 2.0 sq.ft. AND A MINIMUM WEIGHT OF 250 LBS. DRAIN GRATES SHALL BE BICYCLE SAFE.

— 27" x 27" CATCH BASIN GRATE & FRAME
NOT TO SCALE

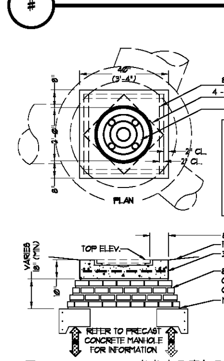

MANHOLE COVER NOTE:

ALL JUNCTION BOX/MANHOLES LOCATED WITHIN THE LIMITS OF VEHICULAR PAVING AREAS SHALL HAVE HEAVY DUTY, TRAFFIC RATED RINGS & COVERS. (H-20 LOADING/TRAFFIC RATING).

ALL JUNCTION BOX/MANHOLES NOT SUBJECT TO VEHICULAR LOADS MAY UTILIZE NON-TRAFFIC RATED RINGS & COVERS.

2 — JUNCTION BOX / MANHOLE TOP
NOT TO SCALE

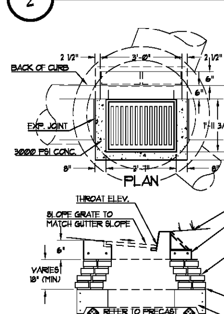

NOTE:
REFER TO GEORGIA D.O.T. REFERENCE DETAILS FOR FURTHER INFORMATION. USE GEORGIA D.O.T. STANDARD 1019A TYPE 'E' (WITH HOOD). GRATE, FRAME & HOOP HEAVY WEIGHT 2 1/2" THICK. GRATE SHALL BE BICYCLE SAFE.

3 — G.D.O.T. STANDARD 1019A CURB INLET - TYPE "E" WITH HOOD
NOT TO SCALE

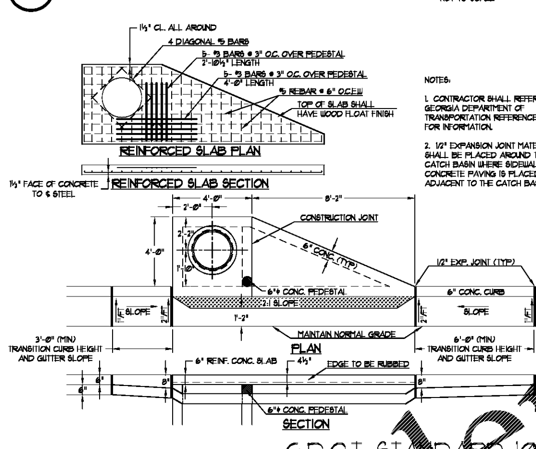

NOTES:

1. CONTRACTOR SHALL REFER TO GEORGIA DEPARTMENT OF TRANSPORTATION REFERENCE DETAILS FOR INFORMATION.

2. 1/2" EXPANSION JOINT MATERIAL SHALL BE PLACED AROUND THE CATCH BASIN WHERE SIDEWALK OR CONCRETE PAVING IS PLACED ADJACENT TO THE CATCH BASIN.

4 — G.D.O.T. STANDARD 1033 SINGLE-WING CATCH BASIN
NOT TO SCALE

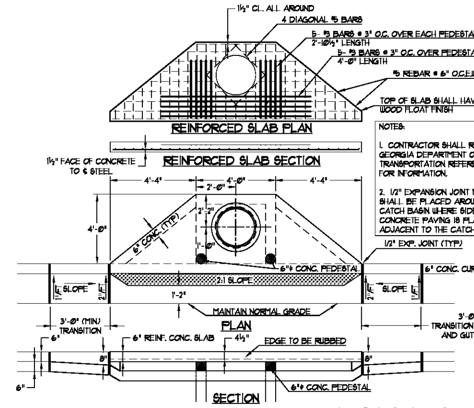

NOTES:

1. CONTRACTOR SHALL REFER TO GEORGIA DEPARTMENT OF TRANSPORTATION REFERENCE DETAILS FOR INFORMATION.

2. 1/2" EXPANSION JOINT MATERIAL SHALL BE PLACED AROUND THE CATCH BASIN WHERE SIDEWALK OR CONCRETE PAVING IS PLACED ADJACENT TO THE CATCH BASIN.

5 — G.D.O.T. STANDARD 1034 DOUBLE-WING CATCH BASIN
NOT TO SCALE

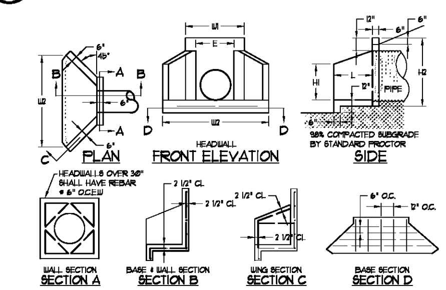

HEADWALL DIMENSIONS FOR METAL PIPE								
PIPE DIA. (In)	W1	W2	H1	H2	L	E	WEIGHT	BASE
15", 18"	3'-2"	4'-10"	1'-3"	3'-2"	1'-3"	1'-9"	1550#	1.34#
21", 24"	3'-8"	6'-1"	1'-9"	3'-8"	1'-6"	2'-3"	2100#	9.90#
30"	4'-2"	7'-2"	2'-0"	4'-2"	1'-10"	2'-9"	2850#	13.50#
36"	4'-8"	8'-4"	2'-4"	4'-8"	2'-2"	3'-3"	3700#	17.65#
42", 48"	5'-8"	10'-10"	3'-3"	5'-8"	2'-11"	4'-3"	5600#	28.60#
54", 60"	6'-10"	11'-9"	3'-6"	6'-8"	3'-4"	5'-3"	7500#	36.27#
72"	8'-5"	12'-7"	5'-7"	8'-0"	3'-5"	7'-0"	10600#	

NOTES:
1. ALL CONCRETE SHALL BE 4000 PSI.
2. REINFORCING STEEL SHALL BE 1/2" INTERMEDIATE GRADE.
3. 3/4" CHAMFER ON ALL EXPOSED EDGES.
4. RIP-RAP SHALL BE PER STORM DRAIN OUTLET PROTECTION.

USE NEXT LARGER SIZE WHEN INSTALLING ON REINFORCED CONCRETE PIPE.

6 — HEADWALL (HW)
NOT TO SCALE

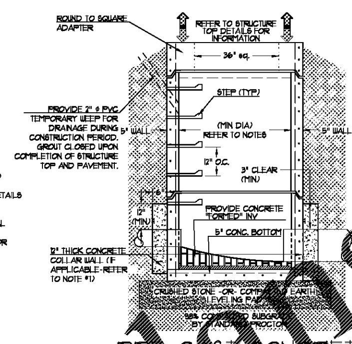

NOTE
CONTRACTOR SHALL INSTALL A POLYACRYLAMIDE (PAM) GEL BAR OR APPLICATOR LOG IN EACH STORM STRUCTURE (SECURED WITH ROPE) AT THE TIME OF INSTALLATION AND REPLACE BAR OR LOG AT THE MANUFACTURES RECOMMENDED INTERVAL.

1. STORM STRUCTURE SHALL CONFORM WITH LATEST EDITION OF G.D.O.T. SPECIFICATIONS AND REFERENCE DETAILS.
2. ALL JOINTS BETWEEN PRECAST BASE, RISERS, AND ROUND-TO-SQUARE ADAPTERS SHALL BE KEYED. ALL JOINTS SHALL BE GROUTED INSIDE AND OUTSIDE.
3. ALL JOINTS BETWEEN INCOMING & OUTGOING PIPES SHALL BE GROUTED INSIDE AND OUTSIDE OF MANHOLE
4. ALL PRECAST CONCRETE SHALL BE 4000 PSI.
5. TOP OF ROUND-TO-SQUARE ADAPTER SHALL BE 24" BELOW FINISHED GRADE (MIN).
6. CONTRACTOR SHALL PROVIDE FORMED INVERT FOR ALL STORM MANHOLE STRUCTURES.
7. CONCRETE COLLAR WALL SHALL BE REQUIRED AT ALL MANHOLES WHERE RCP PIPE ENTERS/EXITS THE MANHOLE STRUCTURE. CONCRETE COLLAR WALL SHALL BE 12" THICK AND EXTEND A MINIMUM OF 6" BEYOND THE OUTSIDE DIAMETER OF PIPE.
8. CONTRACTOR HAS THE OPTION OF USING PRECAST, BRICK, OR POURED-IN-PLACE STORM STRUCTURES.

MANHOLE DIAMETERS v. PIPE SIZE
CONTRACTOR SHALL BE RESPONSIBLE FOR COORDINATING THE DIAMETER OF THE STRUCTURE WITH THE SIZE AND/OR NUMBER OF PIPE PENETRATIONS IN THE STRUCTURE. CONTRACTOR SHALL SUBMIT SHOP DRAWINGS FOR STRUCTURES LOCATED ON PIPE LARGER THAN 12" IN DIAMETER.

7 — PRE-CAST CONCRETE MANHOLE WITH FORMED INVERT & COLLAR WALLS
NOT TO SCALE

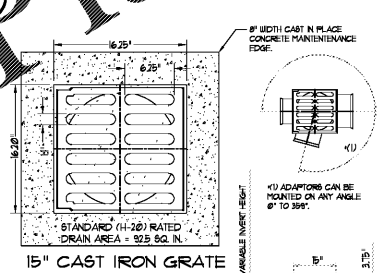

15" CAST IRON GRATE

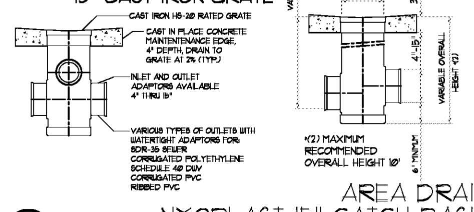

— AREA DRAIN NYOPLAST 15" CATCH BASIN
NOT TO SCALE

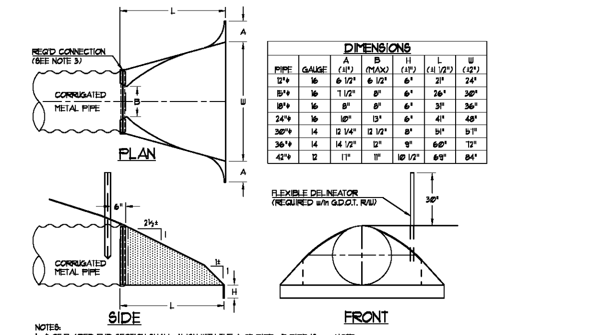

DIMENSIONS						
PIPE	GAUGE	A (±1")	B (MAX)	H (±1")	L (±1 1/2")	W (±2")
12"ø	16	6 1/2"	6 1/2"	6"	21"	24"
15"ø	16	7 1/2"	8"	6"	26"	30"
18"ø	16	8"	8"	6"	31"	36"
24"ø	16	10"	13"	6"	41"	48"
30"ø	14	12 1/4"	12 1/2"	8"	51"	57"
36"ø	14	14 1/2"	12"	9"	60"	72"
42"ø	12	17"	11"	10 1/2"	69"	84"

NOTES:
1. ¢ OF FLARED END SECTION SHALL ALIGN WITH THE ¢ OF PIPE. IF PIPE IS SKEWED, THE EMBANKMENT SLOPE SHALL BE WARPED TO CONFORM WITH END SECTION.
2. FLEXIBLE DELINEATORS SHALL BE REQUIRED WITHIN G.D.O.T. RIGHT-OF-WAY.
3. THE CONNECTION BETWEEN METAL FLARED END SECTION AND PIPE SHALL BE ONE OF THE FOLLOWING:
A. A STRAP BAND OR THREADED ROD PROVIDED BY THE MANUFACTURER WILL LOCK END SECTION TO PIPE. A CORRUGATION AT THE PIPE END WILL BE NON-SPIRALED (PERPENDICULAR TO ¢ OF PIPE).
B. A DIMPLE BAND COLLAR WILL BE SHOP BOLTED TO END SECTION. PIPE WILL BE INSERTED INTO THE BAND COLLAR TO MEET THE END SECTION.
C. A STUB PIPE WILL BE RIVETED TO THE END SECTION AND THE MAIN PIPE CONNECTED TO THE STUB WITH A NORMAL CONNECTING BAND.
D. OTHER TYPE CONNECTION IF RECOMMENDED BY MANUFACTURER AND APPROVED BY G.D.O.T.

NOTE:
GALVANIZED STEEL FLARED END SECTIONS ARE TO BE USED ONLY WITH CORRUGATED STEEL PIPE AND ALUMINUM FLARED END SECTIONS ARE TO BE USED ONLY WITH CORRUGATED ALUMINUM PIPE UNLESS OTHERWISE APPROVED BY D.O.T. OFFICE OF MATERIALS AND TESTS.

NOTE:
WHERE METAL FLARED END SECTIONS ARE TO BE USED WITH MULTIPLE PIPE LINES, THE STANDARD PIPE SPACING BETWEEN PIPES (S=D OR 3 FT.) MAY HAVE TO BE INCREASED (S=1.15 D TYP.) TO PREVENT OVERLAP OF END SECTION WINGTIPS. SEE ALSO STD. 1030D.

NOTE FOR CONCRETE PIPE:
FLARED END SECTIONS FOR CONCRETE PIPE STORM DRAINS SHALL BE IN ACCORDANCE WITH GDOT STD 1120.

— FLARED END SECTION
NOT TO SCALE

CONTRACTOR'S OPTION

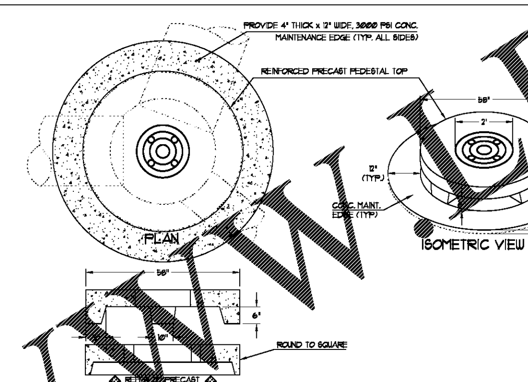

10 — PEDESTAL TOP (ROUND)
NOT TO SCALE

OR

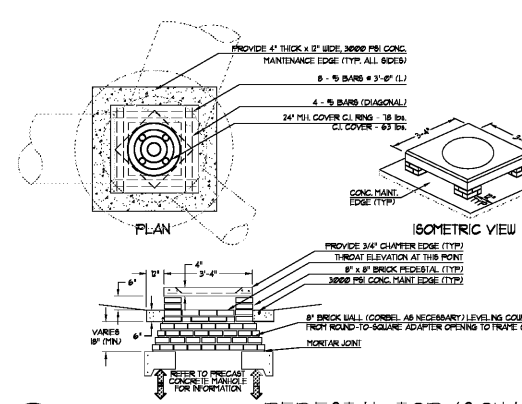

11 — PEDESTAL TOP (SQUARE)
NOT TO SCALE

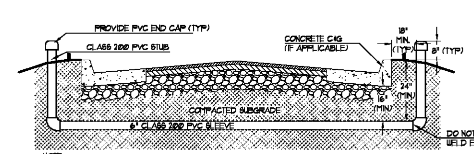

NOTE:
INSTALLER OF SLEEVES SHALL BE RESPONSIBLE TO RELOCATE SLEEVES IF NOT PROPERLY LOCATED.

12 — SLEEVING DETAIL
NOT TO SCALE

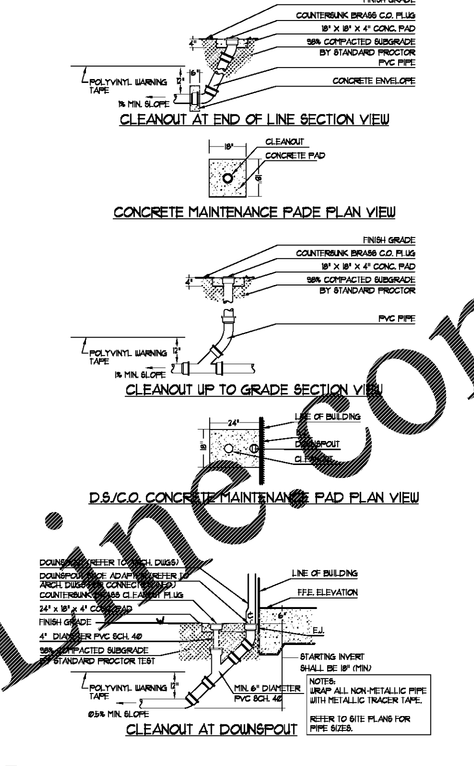

13 — DOWNSPOUT/CLEANOUT DETAIL
NOT TO SCALE

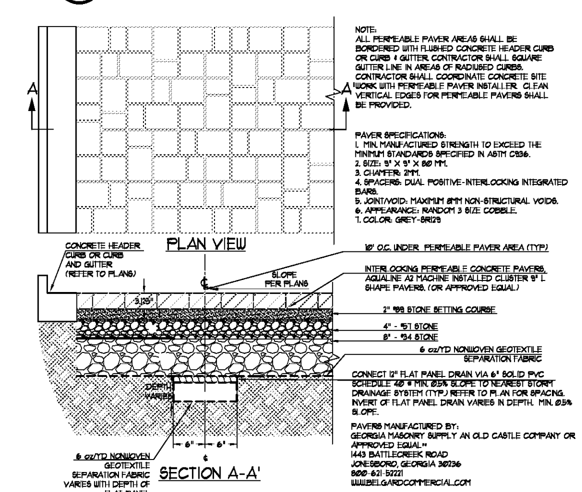

NOTE:
ALL PERMEABLE PAVER AREAS SHALL BE BORDERED WITH FLUSHED CONCRETE HEADER CURB OR CURB & GUTTER. CONTRACTOR SHALL SQUARE GUTTER LINE IN AREAS OF RADIUSED CURBS. CONTRACTOR SHALL COORDINATE CONCRETE SITE WORK WITH PERMEABLE PAVER INSTALLER. CLEAN VERTICAL EDGES FOR PERMEABLE PAVERS SHALL BE PROVIDED.

PAVER SPECIFICATIONS:
1. MIN. MANUFACTURED STRENGTH TO EXCEED THE MINIMUM STANDARDS SPECIFIED IN ASTM C936.
2. SIZE: 9" X 9" X 80 MM.
3. CHAMFER: 2MM.
4. SPACERS: DUAL POSITIVE-INTERLOCKING INTEGRATED BARS.
5. JOINT/VOID: MAXIMUM 8MM NON-STRUCTURAL VOIDS.
6. APPEARANCE: RANDOM 3 SIZE COBBLE.
7. COLOR: GREY-SR129

PAVERS MANUFACTURED BY:
GEORGIA MASONRY SUPPLY AN OLD CASTLE COMPANY OR APPROVED EQUAL**
1443 BATTLECREEK ROAD
JONESBORO, GEORGIA 30236
800-621-52221
WWW.BELGARDCOMMERCIAL.COM

14 — PERMEABLE PAVERS
NOT TO SCALE

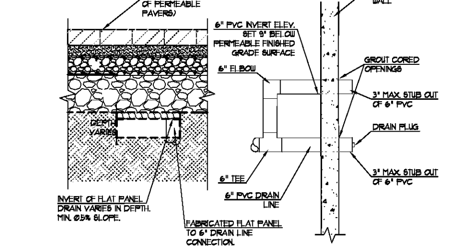

15 — UNDERDRAIN CONNECTION DETAIL
NOT TO SCALE

BREEDLOVE LAND PLANNING
Landscape Architects • Civil Engineers
www.landplanning.net

BLP JOB# 18151

24-HR CONTACT INFORMATION

BRUCE STUART
OWNER/PRIMARY PERMITTEE
ROCKDALE CO. PUBLIC SCHOOLS
678-873-7942

REVISIONS / PRINTED		
REV. NO.	DATE	REMARKS
1	04/05/19	GDOE PRELIMINARY
2	08/05/19	SITE PACKAGE
3	08/16/19	GDOE CHECK SET

One Piedmont Center, Suite 303 3565 Piedmont Road Atlanta, Georgia 30305

Smallwood, Reynolds, Stewart, Stewart & Associates, Inc. Architects

PROJECT SUMMARY
NAME: JH HOUSE ELEMENTARY SCHOOL
GRADES: PRE-K THRU 5TH
F.T.E.: 800
G.D.O.E. # : TO BE ASSIGNED

BUILDING AREA

LEVEL 01	71,152 SF
LEVEL 02	37,379 SF
TOTAL	108,531 SF

COVERED AREAS (I.E. CANOPIES)

COVERED AREAS	5,186 SF
DIVIDE (+) BY 2	+2
TOTAL	2,593 SF

INSTRUCTIONAL UNITS

REGULAR CLASSROOMS	45
PAIRED FLEX AREAS	2
MUSIC	1
PHYSICAL EDUCATION	1
MEDIA CENTER	1
ART	1
TOTAL	51

RCPS

© COPYRIGHT 2016 SMALLWOOD, REYNOLDS, STEWART, STEWART, & ASSOCIATES, INC.
THIS DRAWING IS THE PROPERTY OF THE ARCHITECT AND MAY NOT BE REPRODUCED OR USED WITHOUT THEIR WRITTEN PERMISSION

SITE WORK CONSTRUCTION DETAILS

J.H. HOUSE ELEMENTARY SCHOOL
3100 Zingara Road NE, Conyers, GA 30012

DATE

JOB NO. **218036.00**

SHEET NO. **C700**

ISSUED FOR CONSTRUCTION

Order Plans @ www.LDIIine.com