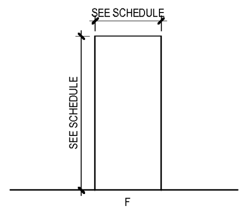

DOOR TYPE
1

A6 DOOR ELEVATION
1/4" = 1'-0"

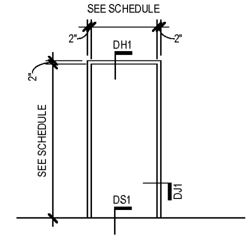

FRAME TYPE
A

A5 DOOR FRAME ELEVATION
1/4" = 1'-0"

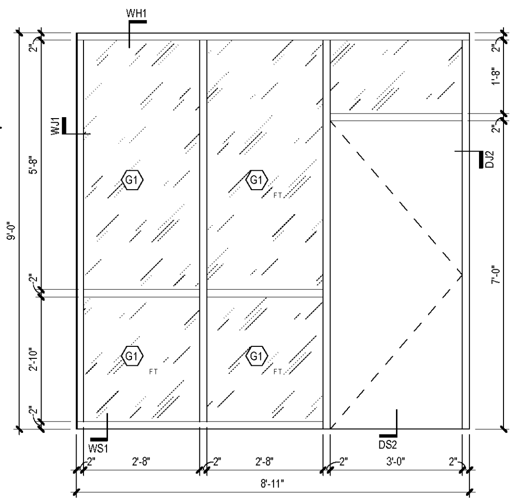

B6 INTERIOR STOREFRONT ELEVATION
1/2" = 1'-0"
1 / SFP-05

DOOR SCHEDULE

MARK	ROOM NAME	DOOR WIDTH	DOOR HEIGHT	DOOR TYPE	DOOR MATERIAL	FRAME TYPE	FRAME MATERIAL	RATING	HDW	DETAILS HEAD	DETAILS JAMB	DETAILS SILL	NOTES
FIRST FLOOR													
104	OFFICE	3'-0"	7'-0"					N/A	5	DH2	DJ2	DS2	STOREFRONT, SEE NOTE G1, G2
105	REMITTANCE	3'-0"	7'-0"	1	WD	A	HM	N/A	4	DH1	DJ1	DS1	INCLUDE DOOR SCOPE AT 59" AFF
106	BREAK	3'-0"	7'-0"	1	WD	A	HM	N/A	6	DH1	DJ1	DS1	
108	WOMEN	3'-0"	7'-0"	1	WD	A	HM	N/A	7	DH1	DJ1	DS1	
109	MEN	3'-0"	7'-0"	1	WD	A	HM	N/A	7	DH1	DJ1	DS1	
110	STORAGE	3'-0"	7'-0"	1	WD	A	HM	N/A	3	DH1	DJ1	DS1	SEE NOTE G5
111	ELEC/DATA	3'-0"	7'-0"	1	WD	A	HM	N/A	4	DH1	DJ1	DS1	

HARDWARE SETS

SET # 1
- CONCEALED CLOSER
- CONTINUOUS HINGE
- LOCKSET
- KICK PLATE
- THRESHOLD
- DOOR SWEEP
- WEATHERSTRIP
- RAIN DRIP
- LATCH GUARD

SET # 2
- IEI KEYPAD (MULLION MOUNT)
- ELECTRIC-STRIKE (FAIL-SAFE)
- LATCH GUARD

SET # 3
- PANIC HARDWARE
- NO EXTERIOR PULL
- LATCH GUARD

SET # 4
- CLOSER
- KABA POWERPLEX 2000 SERIES P2031XSLL-626-41
- ELECTRONIC LOCK
- MASTER KEY OVERRIDE
- WALL STOP
- BUTT HINGES
- DOOR SILENCERS

SET # 5
- CLOSER
- OFFICE SET
- OVERHEAD STOP
- BUTT HINGES
- DOOR SILENCERS
- IVES WS40 AUTOMATIC WALL HOLDER W/ LATCH

SET # 6
- CLOSER
- PASSAGE SET
- OVERHEAD STOP
- BUTT HINGES
- DOOR SILENCERS

SET # 7
- CLOSER
- PRIVACY SET
- WALL STOP
- BUTT HINGES
- DOOR SILENCERS

DOOR SCHEDULE NOTES:

1. PART OF EXISTING OR NEW ALUMINUM STOREFRONT / CURTAIN WALL SYSTEM. (SEE STOREFRONT ELEVATIONS)
2. HEAD/JAMB/SILL DETAILS BY MANUFACTURER.
3. KEY PAD, PREP DOOR AND FRAME FOR KEY PAD ACCESS AND HARDWARE - COORDINATE WITH OWNER AND SECURITY VENDOR.
4. AS NOTED, EXIT DOORS TO BE EQUIPPED WITH PANIC HARDWARE.
5. EXISTING DOOR TO REMAIN, NEW HARDWARE. NEW HARDWARE TO MATCH SHELL BUILDING STANDARD.
6. **IBC 1008.1.9.8 Electromagnetically locked egress doors.**

   Doors in the means of egress that are not otherwise required to have panic hardware in buildings with an occupancy in Group A, B, E, M, R-1 or R-2 and doors to tenant spaces in Group A, B, E, M, R-1 or R-2 shall be permitted to be electromagnetically locked if equipped with listed hardware that incorporates a built-in switch and meet the requirements below:

   1. The listed hardware that is affixed to the door leaf has an obvious method of operation that is readily operated under all lighting conditions.

   2. The listed hardware is capable of being operated with one hand.

   3. Operation of the listed hardware releases to the electromagnetic lock and unlocks the door immediately.

   4. Loss of power to the listed hardware automatically unlocks the door.
7. EXIT DOORS WITH LOCKING DEVICE TO BE READILY DISTINGUISHABLE AS LOCKED AND MUST HAVE READILY VISIBLE DURABLE SIGN POSTED ON EGRESS SIDE OR ADJACENT TO THE DOOR STATING: "THIS DOOR IS TO REMAIN UNLOCKED WHEN THIS SPACE IS OCCUPIED. IBC 1010.1.9.3
8. NEW DOOR STYLE AND NEW HARDWARE TO MATCH SHELL BUILDING STANDARD.

DOOR & WINDOW NOTES

GENERAL DOOR NOTES:

G1. G.C. TO FIELD VERIFY ALL HEIGHTS, WIDTHS, AND OVERALL OPENING DIMENSIONS FOR NEW STOREFRONT AND/OR CURTAIN WALL SYSTEMS.

G2. ALL HARDWARE TO BE ACCESSIBLE PER THE REQUIREMENTS OF ADA / APPLICABLE ANSI CODE, AND BE FAIL SECURE AND PROVIDE MECHANICAL FREE EGRESS.

G3. WOOD DOORS TO BE SCW ROTARY CUT NATURAL BIRCH, FINISHED AS SCHEDULED.

G4. ALUMINUM DOOR SUPPLIER TO PROVIDE "KEYED ALIKE" MORTISE CYLINDERS FOR ALL KEYED ALUMINUM DOORS.

G5. DOOR HARDWARE SHALL BE PROVIDED WITH IC CORES - COORDINATE KEYING SCHEDULE WITH OWNER PRIOR TO ORDERING CYLINDERS.

G6. CONTROL KEY FOR TEMPORARY SCHLAGE IC CORES DURING CONSTRUCTION: AT END OF PROJECT, THE SCHLAGE IC CONTROL KEY IS TO BE LEFT ON SITE AND MARKED "CONTROL KEY" FOR OWNER AUTHORIZED PERSONNEL OR LOCKSMITH SERVICE COMPANY TO REMOVE IC CONSTRUCTION CORES IN ORDER TO INSTALL PERMANENT CORES.

G7. INTERIOR HOLLOW METAL DOOR AND FRAME FINISH TO BE PAINT TO MATCH ADJACENT WALL SURFACE, UNO.. EXTERIOR HOLLOW METAL DOOR AND FRAME FINISH TO BE PAINT AS INDICATED IN FINISH SCHEDULE.

G8. ADJUST STOREFRONT DIMENSIONS AS REQUIRED TO ACCOUNT FOR SHIM/SEALANT SPACE. MAINTAIN SCHEDULED DOOR SIZES AND ADJUST ROUGH OPENING AS REQUIRED TO ACCOMMODATE.

G9. REFERENCE MECHANICAL DRAWINGS FOR ALL REQUIRED DOOR UNDERCUTS.

G11. PANIC HARDWARE, WHERE INSTALLED, SHALL BE LISTED AND CONSIST OF CROSSBARS OR PUSH PADS, THE ACTUATING PORTION OF WHICH EXTENDS NOT LESS THAT ONE-HALF THE WIDTH OF THE DOOR LEAF AND NOT LESS THAN 34" INCHES NOR MORE THAN 48" ABOVE F.F.E.

G12. REFER TO HARDWARE SCHEDULE AND HARDWARE SPECIFICATIONS. DOOR HARDWARE IN RATED WALLS TO COMPLY WITH U.L. LABEL REQUIREMENTS FOR EACH OPENING.

G15. REFERENCE PARTITION TYPES, PLANS AND SECTIONS TO CHECK FRAME THROAT DIMENSIONS.

ELEVATION LEGEND

- G# GLAZING TYPE TAG
- XX HEAD/JAMB/SILL SECTION CUT (SEE DETAILS THIS SHEET)
- EXISTING TO REMAIN

GLAZING TYPES

- G1 1/4" CLEAR GLASS - FULLY TEMPERED (FT)
- G2 GLASS TO MATCH SHELL BUILDING EXTERIOR - FULLY TEMPERED (FT)

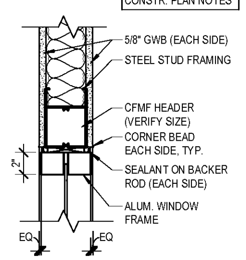

WH1

C6 WINDOW HEAD DETAILS
1 1/2" = 1'-0"

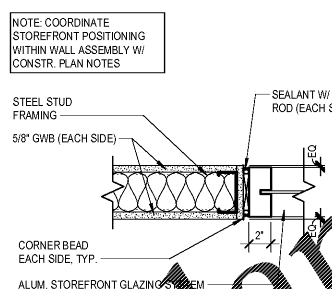

WJ1

C5 WINDOW JAMB DETAILS
1 1/2" = 1'-0"

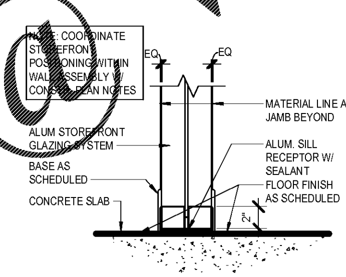

WS1

C4 WINDOW SILL DETAILS
1 1/2" = 1'-0"

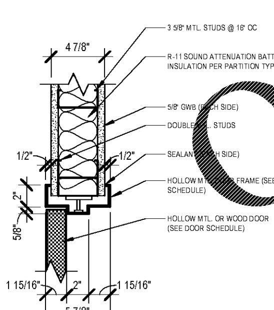

DH1

D6 DOOR HEAD DETAILS
1 1/2" = 1'-0"

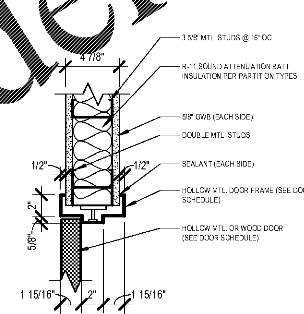

DJ1

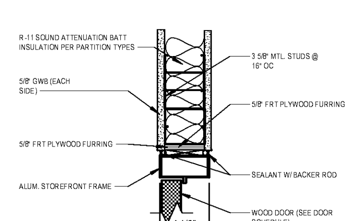

DJ2

D5 DOOR JAMB DETAILS
1 1/2" = 1'-0"

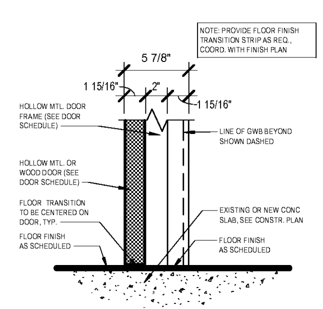

DS1

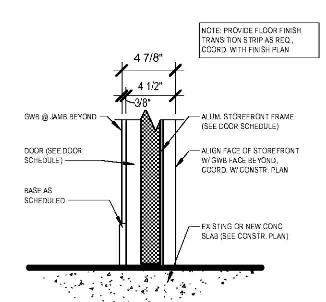

DS2

D4 DOOR SILL DETAILS
1 1/2" = 1'-0"

Order Plans @ WWW.LDILine.com

progressive ae
PROGRESSIVE ARCHITECTURE ENGINEERING, PC
330 South Tryon St. Suite 500 · Charlotte, NC 28202 · 704.731.8080 · www.progressiveae.com

COLUMBUS, GA
AAA AUTO CLUB GROUP
6201 Veterans Pkwy, Suite C, Columbus, GA 31909

If this document is sealed and signed in a digital or electronic format and is received from someone other than the sealing professional identified in the document, you must contact the sealing professional in writing to validate authenticity of the document. The sealing professional disclaims the seal and signature and shall not be liable for any liability associated with it where the authenticity of any digital or electronic seal or signature has not been validated in this manner.

ISSUANCE
ISSUED FOR CONSTRUCTION
2019/11/13

REVISIONS
NO. DATE DESCRIPTION

FILE NUMBER	79890016
PROJECT MANAGER	JE
PROFESSIONAL	GWJ
DRAWN BY	ME
CHECKED BY	MB

DOOR SCHEDULE AND DETAILS
A-601