NYLOPLAST 12" INLINE DRAIN: 2712AG _ _ X

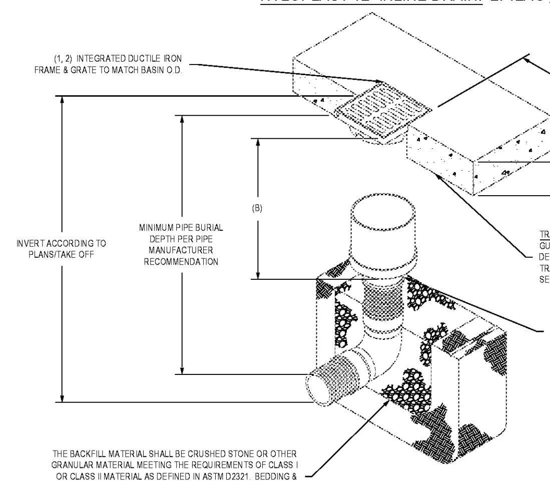

ADAPTER SIZE	B
4"	10.50
6"	11.50
8"	11.90
10"	11.25
12"	9.00

GRATE OPTIONS	LOAD RATING	PART #	DRAWING #
PEDESTRIAN	MEETS H-10	1299CGP	7001-110-202
STANDARD	MEETS H-20	1299CGS	7001-110-203
SOLID COVER	MEETS H-20	1299CGC	7001-110-204
PEDESTRIAN BRONZE	N/A	1299CGPB	7001-110-205
DOME	N/A	1299CGD	7001-110-206
DROP IN GRATE	LIGHT DUTY	1201DI	7001-110-021

1 - GRATES/SOLID COVER SHALL BE DUCTILE IRON PER ASTM A536 GRADE 70-50-05, WITH THE EXCEPTION OF THE BRONZE GRATE.
2 - FRAMES SHALL BE DUCTILE IRON PER ASTM A536 GRADE 70-50-05.
3 - DRAINAGE CONNECTION STUB JOINT TIGHTNESS SHALL CONFORM TO ASTM D3212 FOR CORRUGATED HDPE (ADS N-12/HANCOR DUAL WALL), N-12 HP, & PVC SEWER.
4 - DIMENSIONS ARE FOR REFERENCE ONLY. ACTUAL DIMENSIONS MAY VARY.
5 - DIMENSIONS ARE IN INCHES
6 - SEE DRAWING NO. 7001-110-275 FOR ADS N-12 & HANCOR DUAL WALL BELL INFORMATION & DRAWING NO. 7001-110-364 FOR N-12 HP BELL INFORMATION.

Nyloplast — 12 IN INLINE DRAIN QUICK SPEC INSTALLATION DETAIL

1299CGC

APPROX. WEIGHT WITH FRAME = 39.90 LBS

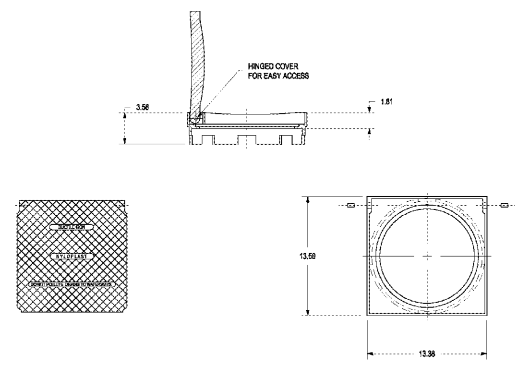

DIMENSIONS ARE FOR REFERENCE ONLY
ACTUAL DIMENSIONS MAY VARY
DIMENSIONS ARE IN INCHES
GRATE MEETS H-20 LOAD RATING
QUALITY: MATERIALS SHALL CONFORM TO ASTM A536 GRADE 70-50-05
PAINT: CASTINGS ARE FURNISHED WITH A BLACK PAINT
LOCKING DEVICE AVAILABLE UPON REQUEST SEE DRAWING NO. 7001-110-033

THIS PRINT DISCLOSES SUBJECT MATTER IN WHICH NYLOPLAST HAS PROPRIETARY RIGHTS. THE RECEIPT OR POSSESSION OF THIS PRINT DOES NOT CONFER, TRANSFER, OR LICENSE THE USE OF THE DESIGN OR TECHNICAL INFORMATION SHOWN HEREIN REPRODUCTION OF THIS PRINT OR ANY INFORMATION CONTAINED HEREIN, OR MANUFACTURE OF ANY ARTICLE HEREFROM, FOR THE DISCLOSURE TO OTHERS IS FORBIDDEN, EXCEPT BY SPECIFIC WRITTEN PERMISSION FROM NYLOPLAST.

DRAWN BY	EBC	MATERIAL	DUCTILE IRON
DATE	3-3-06	PROJECT NO./NAME	
REVISED BY	EBC		
DATE	3-16-10		
DWG SIZE	A	SCALE 1:8	SHEET 1 OF 1

Nyloplast — 3130 VERONA AVE, BUFORD, GA 30518, PHN (770) 932-2443, FAX (770) 932-2490, www.nyloplast-us.com
TITLE: 12 IN SOLID COVER ASSEMBLY — DWG NO. 7001-110-204 — REV C

NYLOPLAST DRAIN BASIN WITH SOLID COVER

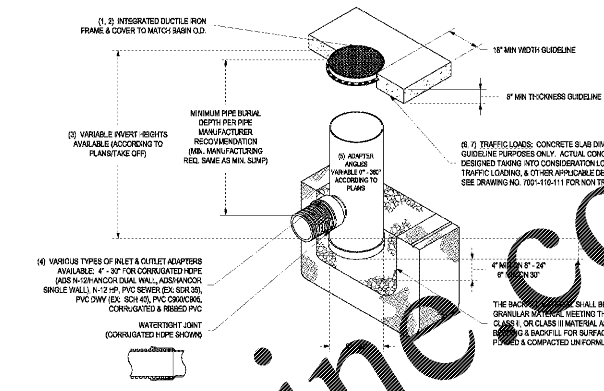

1 - 8" - 30" SOLID COVERS SHALL BE DUCTILE IRON PER ASTM A536 GRADE 70-50-05.
2 - 12" - 30" FRAMES SHALL BE DUCTILE IRON PER ASTM A536 GRADE 70-50-05. 8" & 10" SOLID COVERS FIT DIRECTLY ONTO DRAIN BASIN WITH THE USE OF A PVC BODY TOP. SEE DRAWING NO. 7001-110-046.
3 - DRAIN BASIN TO BE CUSTOM MANUFACTURED ACCORDING TO PLAN DETAILS. RISERS ARE NEEDED FOR BASINS OVER 84" DUE TO SHIPPING RESTRICTIONS. SEE DRAWING NO. 7001-110-065.
4 - DRAINAGE CONNECTION STUB JOINT TIGHTNESS SHALL CONFORM TO ASTM D3212 FOR CORRUGATED HDPE (ADS N-12/HANCOR DUAL WALL), N-12 HP, & PVC SEWER (4" - 24").
5 - ADAPTERS CAN BE MOUNTED ON ANY ANGLE 0° TO 360°. TO DETERMINE MINIMUM ANGLE BETWEEN ADAPTERS SEE DRAWING NO. 7001-110-012.
6 - 12" - 30" SOLID COVERS SHALL MEET H-20 LOAD RATING.
7 - 8" AND 10" SOLID COVERS ARE RATED FOR LIGHT DUTY APPLICATIONS ONLY. NO CONCRETE COLLAR NEEDED FOR LIGHT DUTY RATING.

DRAWN BY	EBC	MATERIAL	
DATE	09-14-07		
REVISED BY	NMH	PROJECT NO./NAME	
DATE	03-11-16		
DWG SIZE	A	SCALE 1:40	SHEET 1 OF 1

Nyloplast — 3130 VERONA AVE, BUFORD, GA 30518, PHN (770) 932-2443, FAX (770) 932-2490, www.nyloplast-us.com
TITLE: DRAIN BASIN WITH SOLID COVER QUICK SPEC INSTALLATION DETAIL — DWG NO. 7001-110-286 — REV D

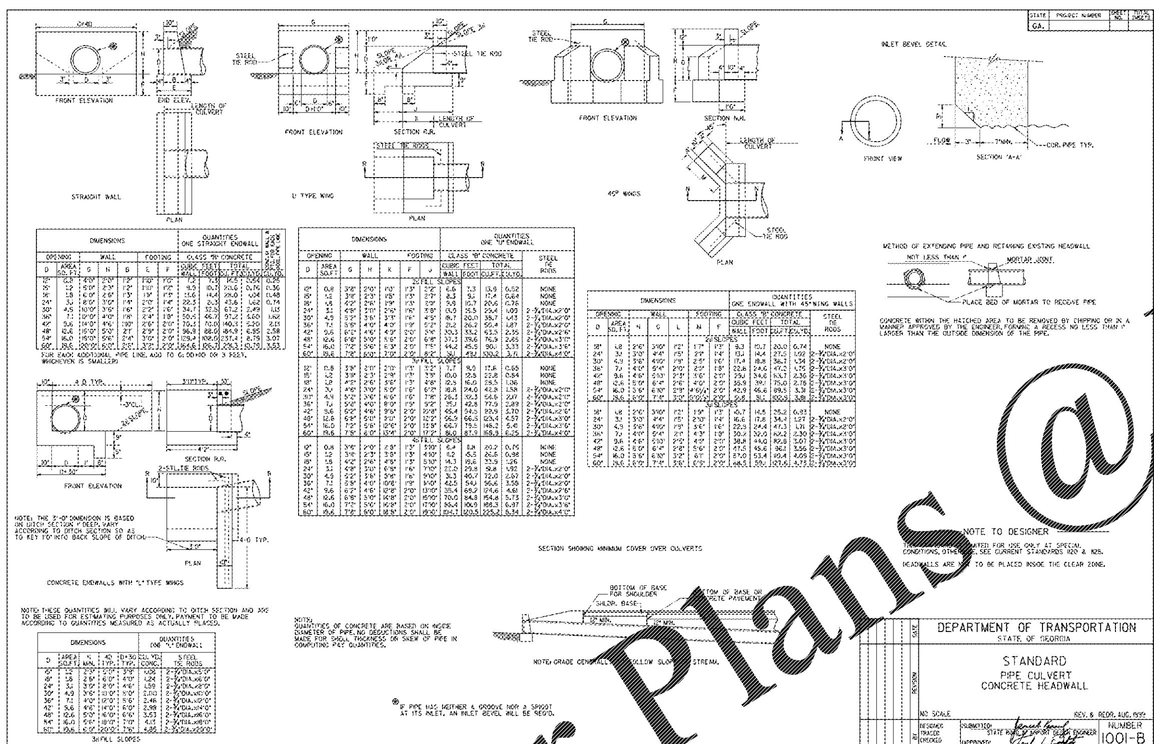

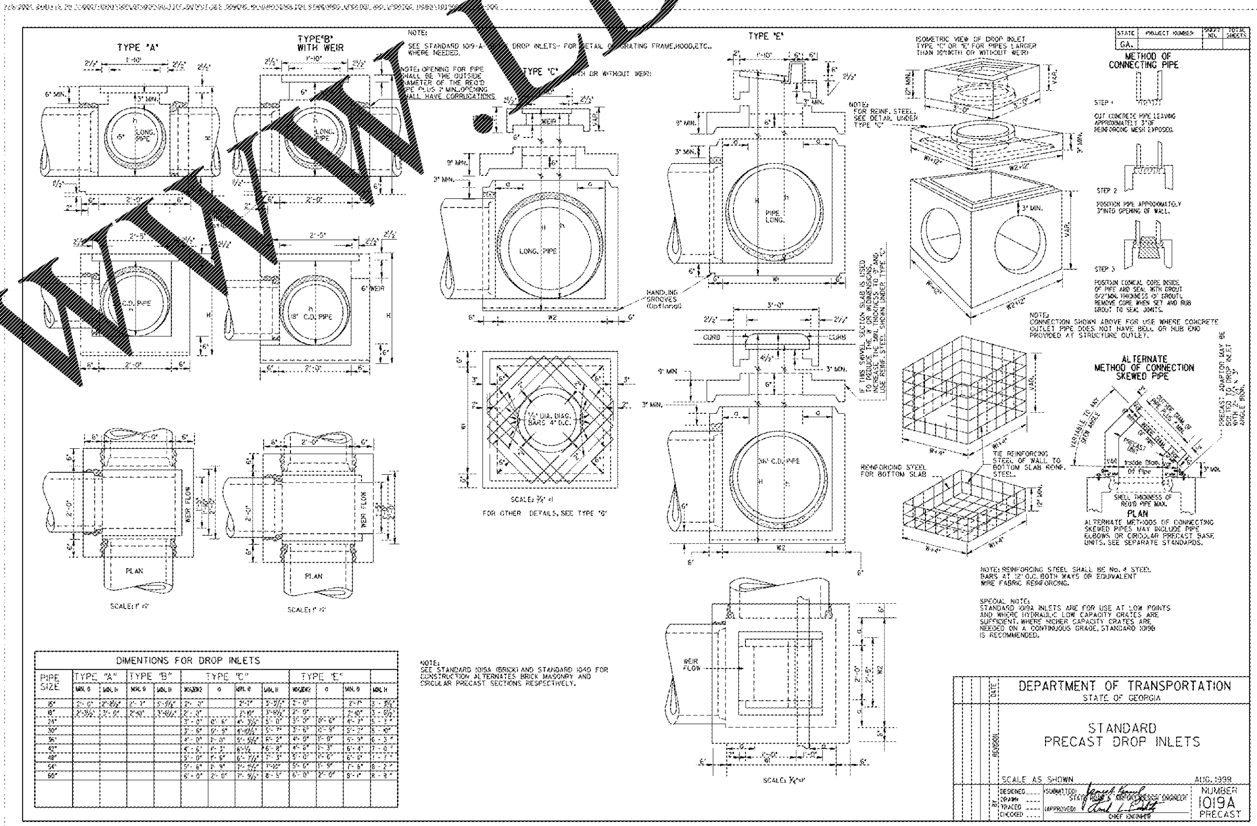

EBERLY & ASSOCIATES
TEL770.452.7849 FAX770.452.0086
2951 FLOWERS RD S, SUITE 119
ATLANTA, GEORGIA 30341
WWW.EBERLY.NET

ISSUANCES		
No.	Drawing Issue Description	Date
A	GaDOE PRELIMINARY SUBMITTAL	20190731
B	ISSUED FOR BID	20191104

PEBBLEBROOK HS B007 - FIELDHOUSE
DOE Facility Code 4066
FTE = 2787
IU = 143

991 OLD ALABAMA ROAD
MABLETON, GA 30126

COBB COUNTY SCHOOL DISTRICT

CONSTRUCTION DETAILS II

JEREMIAH PHILLIPS — Principal-in-Charge
ANTONIO SAMPLE — Project Manager
DYLAN LEE — Project Engineer
ROBERT NIEBIESKI — Staff Engineer
19-110.10 — Project No.
10/25/2019 — Date

C7.01 — Drawing No.

ISSUED FOR CONSTRUCTION

CALL 811
FREE THROUGHOUT THE U.S.A.
THREE WORKING DAYS BEFORE YOU DIG.
GEORGIA811 www.Georgia811.com Know what's below. Call before you dig.

PROJECT NUMBER: 20190224.01 PROJECT NAME: PEBBLEBROOK HS B007 - FIELDHOUSE
SHEET NUMBER: G0.00 - COVER
20190008_Pebblebrook B007_Fieldhouse_2019_central_detached.rvt
10/7/2019 7:48:58 AM

Order Plans @ WWW.LDILine.com