LIGHTING FIXTURE SCHEDULE

TYPE	MANUFAC-TURER	CATALOG NUMBER	FINISH	LAMPS QUAN.	LAMPS TYPE	LAMPS WATTS	VOLT-AGE	REMARKS
A2	HE WILLIAMS LITHONIA COLUMBIA DAYBRITE	LT-2-4-L52-840-AF-DIM-UNV 2BTL4-48L-ADSM-EZ1-LP840 LCAT24-40LWG-EU-PAF 2EVG-43LH-840-4-D	WHITE.PAINT AFTER FAB.	-	LED	40	UNV	2'x4' 4000 LUMEN LED TROFFER WITH GRID TRIM.
A3	HE WILLIAMS LITHONIA COLUMBIA DAYBRITE	LT-2-4-L64-840-AF-DIM-UNV 2BTL4-72L-ADSM-EZ1-LP840 LCAT24-40VLG-EU-PAF 2EVG-74LH-840-4-D	WHITE.PAINT AFTER FAB.	-	LED	63	UNV	2'x4' 6500 LUMEN LED TROFFER WITH GRID TRIM. DIMMABLE WHERE SHOWN CONTROLLED BY DIMMER.
AX	HE WILLIAMS LITHONIA COLUMBIA DAYBRITE	LT-2-2-L39-840-AF-DIM-UNV 2BTL2-40L-ADSM-EZ1-LP840 LCAT22-40HLG-EU-PAF 2EVG-38L-840-2-D	WHITE.PAINT AFTER FAB.	-	LED	40	UNV	2'x2' 3500 LUMEN LED TROFFER WITH GRID TRIM. DIMMABLE WHERE SHOWN CONTROLLED BY DIMMER.
F1	HE WILLIAMS TERON	WMA-2-L15-840-AF-UNV DNB24-L38-277-WS-40K	WHITE.PAINT AFTER FAB.	-	LED	20	UNV	2' WALL BRACKET, MOUNT 3" TO BOTTOM OF FIXTURE ABOVE MIRROR
G	ELEMENT	E4S-L-LO-835-25-D-N-010-E4S-L-F-O-B	BLACK	-	LED	17	120	LED SURFACE 4" SQUARE DOWNLIGHT IN WOOD CEILINGS, FLANGLESS. EQUAL BY HE WILLIAMS, GOTHAM, PRESCOLITE
J	FINELITE	HP-4-D-RG-H-840-RG-LHE-120-FA-FE-SC-C4	-	-	LED	8	UNV	LED PENDANT, HUNG AT 12" BELOW CEILING.
LA	FINELITE	HP-4-XX-B-840-F-120-SC-VF-RECT	-	-	LED	4.8/FT	UNV	RECESSED LED LINEAR, PROVDE RECTANGLE CONFIGURATION PROVIDE FIXTURE DIMENSIONS AS SHOWN ON PLANS.
LB	PINNACLE	EV3-WET-40-XX-FL(F)-U-OL1-1-W	-	-	LED	4.8/FT	UNV	RECESSED LED LINEAR, PROVIDE RUN LENGTHS AS SHOWN ON PLANS. WET LOCATION
M1	INDY GOTHAM LIGHTOLIER PRESCOLITE HE WILLIAMS	L6-13-35K-U-L600P-CQ-WH EVO-35/14-6AR-MV-TRW C6L-10-DL-35-CL-VB-N-U-Z10V LF6LEDG4-6LFLED5G4-35K-WT 6DR-TL-L15-8-35K-UNV-L-M-CS-N	-	-	LED	18	UNV	6" RECESSED ROUND 1300 LUMEN OPEN LED DOWNLIGHT.
M2	WAC	HR3LEDT118PF827HBN	-	-	LED	21	UNV	2" RECESSED ROUND 1000 LUMEN OPEN LED DOWNLIGHT.
MR	HE WILLIAMS	6DR-TL-L10-8-35K-UNV-L-M-WH-R	-	-	LED	9	UNV	6" RECESSED ROUND 1000 LUMEN OPEN LED DOWNLIGHT. WET LOCATION UNDER COVER CEILING WHERE SHOWN AT EXTERIOR LOCATIONS.
N	H.E. WILLIAMS	AVX-4-LED*PH60/840-WPC-UNV	WHITE.PAINT AFTER FAB.	-	LED	62	UNV	4' LED SURFACE MOUNT , VANDAL-RESISTANT WHITE POLYCARBONATE LENS FIXTURE.
P1	ALW	RPD14CAS-L10-3500-G40-FG-UNV	FINISH BY ARCHITECT	10	LED	6	UNV	LED PENDANT MULTIPLE.
Q	HE WILLIAMS COLUMBIA LITHONIA	75S-4-LEDPH50-840-A12125-UNV LCL4-40-ML-E-U-PAF ZL1N-L48-50LM-FST-MVOLT-40K-80-WH	WHITE.PAINT AFTER FAB.	-	LED	55	UNV	LED CHAIN HUNG STRIP, LENSED.
SA	BEACON	VPS-60L-136-4K7-2	FINISH BY ARCHITECT	-	LED	136	UNV	SINGLE HEAD, LED POLE MOUNT FIXTURE HEAD TYPE II DISTRIBUTION. MOUNT ON 22.5', 4" ROUND HAPCO ALUMINUM POLE. OVERALL FIXTURE ASSEMBLY, POLE/FOUNDATION SHALL BE 25'. ON FIXTURE PHOTOCELL
SB	BEACON	VPS-60L-136-4K7-2	FINISH BY ARCHITECT	2	LED	136	UNV	DUAL HEAD AT 180 DEG, LED POLE MOUNT FIXTURE HEAD TYPE II DISTRIBUTION. MOUNT ON 22.5', 4" ROUND HAPCO ALUMINUM POLE. OVERALL FIXTURE ASSEMBLY, POLE/FOUNDATION SHALL BE 25'. ON FIXTURE PHOTOCELL
W1	GARDCO LITHONIA HUBBELL	101L-16L-530-NW-3-UNV-PCB WSTLED-P2-40K-VF-MVOLT-PE TRP-30L-4K-035-3-U-CC-PC	FINISH BY ARCHITECT.	-	LED	25	UNV	LED ARCHITECTURAL CUT-OFF WALL PACK.
W2	KENALL	MR13FFL-PP-XX-25L40K-DV	FINISH BY ARCHITECT.	-	LED	25	UNV	LED CEILING MOUNT AT BUILDING OVERHANG.
W3	PIL	MIMIK30TIII-070015	FINISH BY ARCHITECT	-	LED	35	UNV	LED WALL SCONCE AT ENTRANCE.
EM	LITHONIA	EU2LM12	FINISH BY ARCHITECT	-	LED	3	UNV	LED EMERGENCY WALLPACK, CONNECT TO UNSWITCHED CONDUCTOR OF AREA LIGHTING CIRCUIT.
EX1	INFINITY SURE-LITES LITHONIA DUAL LITE	EXIT/CA-SF-R-AC-WF-WH CX-6-1-R-W LES-W1R-120/277 SESRW	WHITE	BY MANF.	LED	-	UNV	SINGLE FACED LED, EVENLY ILLUMINATED EXIT SIGN
EX2	INFINITY SURE-LITES LITHONIA DUAL LITE	EXIT/CA-DF-R-AC-WF-WH CX-6-2-R-W LES-W2R-120/277 SEDRW	WHITE	BY MANF.	LED	-	UNV	DOUBLE FACED LED, EVENLY ILLUMINATED EXIT SIGN

1 / E1.00 LIGHTING FIXTURE SCHEDULE
NTS

Area Lighting Calculation Summary

Typical Area Description	Room #	Calculation Summary* Average (Fc)	Maximum (Fc)	Minimum (Fc)
Classroom	Classroom 2115	57.95	77.4	30.4
Office	Conference 2103	42.96	48.9	26.2
Corridor	Corridor 2191	28.09	42.8	9.6
Corridor	Corridor 2193	36.7	48.2	21.9
Main Entrance	Exterior Entrance	9.17	17.4	4.1
Corridor	Lobby 2101	24.95	35.7	15.9
Office	Principal 2105	41.79	50	26.7
Restroom	Restroom 2113	33.68	73	16.8
Restroom	Toilet 2118A	34.39	44.1	24
Classroom	1st Grd Classroom	55.15	70.7	26.8
Corridor	Corridor 1192	26.55	42.3	10.9
Media Center	Media Center	51.7	67.8	19.5

*Lighting calculations are based on a total light loss maintenance factor (LLF) of 75%.

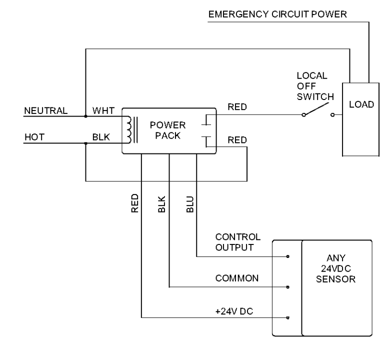

2 / E1.00 TYPICAL OCCUPANCY SENSOR WIRING DIAGRAM
NTS

GENERAL LIGHTING INSTALLATION NOTES:

1. OCCUPANCY SENSORS SHALL BE ADJUSTED AS REQUIRED FOR ROOM COVERAGE, SET TO TIME OUT AFTER 30 MINUTES AND SET TO MAXIMUM SENSITIVITY.
2. COORDINATE OCCUPANCY SENSOR LOCATIONS WITH CASEWORK AND SHELVING. OCCUPANCY SENSORS SHALL NOT BE INSTALLED OVER OBJECTS THAT INTERFERE WITH THEIR OPERATION AND RANGE. SHIFT LOCATIONS AS REQUIRED FOR PROPER OPERATION AND TO ACCESS TO THE DEVICE.
3. PROVIDE MINIMUM #12 AWG CONDUCTORS FOR LIGHTING BRANCH CIRCUITS OR LARGER WHERE INDICATED.
4. ALL LOW VOLTAGE WIRING SHALL BE INSTALLED IN 3/4" CONDUIT. ALL POWER PACKS SHALL BE INSTALLED IN JUNCTION BOXES. INSTALLATION SHALL COMPLY WITH MANUFACTURER'S REQUIREMENTS.
5. THE CONTRACTOR SHALL PROVIDE AN UNSWITCHED CONDUCTOR TO ALL EMERGENCY FIXTURES AS REQUIRED FOR EMERGENCY OPERATION. SEE EMERGENCY LIGHTING NOTES.
6. ADJUST FIXTURE LOCATIONS AS REQUIRED FOR MECHANICAL EQUIPMENT, CHASES, OR OTHER EQUIPMENT AS REQUIRED FOR INSTALLATION.
7. OCCUPANCY SENSOR, SWITCHSTATION, COVERPLATE AND TOGGLE SWITCH COLORS SHALL BE SELECTED BY ARCHITECT. ALL LOW VOLTAGE SWITCHSTATION BUTTONS SHALL BE LABELED TO INDICATE AREA OF CONTROL AND SHALL BE COORDINATED WITH ARCHITECT AND OWNER.
8. TYPICAL SPACES ARE FOR REFERENCE ONLY. CONTRACTOR SHALL PROVIDE CIRCUITING AND SHALL LOCATE OCCUPANCY SENSORS AND SWITCH STATIONS AS REQUIRED FOR SPACE. CORRECT AREA COVERAGE SHALL BE PROVIDED AS REQUIRED WHERE CEILING MOUNTED OCCUPANCY SENSORS ARE INDICATED.

3 / E1.00 GENERAL LIGHTING INSTALLATION NOTES
NTS

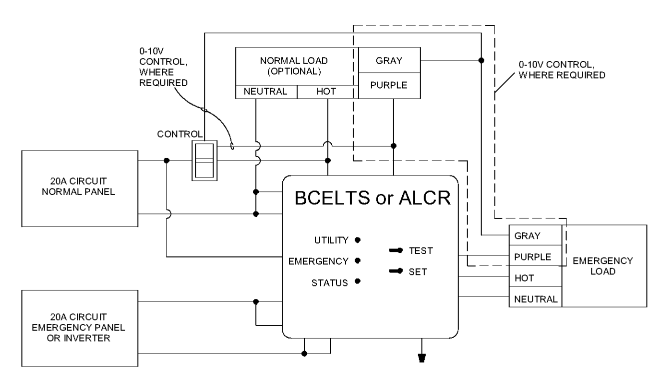

4 / E1.00 EMERGENCY LIGHTING CONNECTION DETAIL
NTS

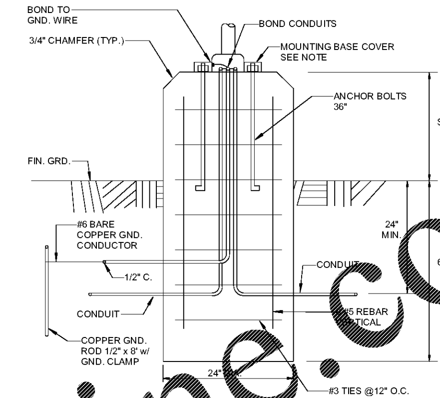

NOTE: FOR TYPE S1, S2 FIXTURE POLES, DIMENSION SHALL BE 30" ABOVE FINISHED GRADE.

5 / E1.00 EXTERIOR LIGHTING POLE FOUNDATION DETAIL
NTS

LIGHTING SYMBOL SCHEDULE

SYMBOL	DESCRIPTION
A (rectangle)	LIGHTING FIXTURE
A (rectangle with diagonal)	EMERGENCY LIGHT, SEE EMERGENCY LIGHTING NOTES , THIS SHEET.
A (circle, bracket)	LIGHTING FIXTURE - WALL OR BRACKET MOUNTED
(pole with square)	POLE MOUNTED AREA LIGHT
(exit symbol)	EXIT LIGHT, CEILING MOUNTED, ARROWS AS INDICATED ON PLANS
(exit symbol, wall)	EXIT LIGHT, WALL MOUNTED, ARROWS AS INDICATED ON PLANS
P	POWER PACK, WATTSTOPPER PART # BZ-150
1	CEILING MOUNTED OCCUPANCY SENSOR, WATTSTOPPER PART # DT-355
2	CEILING MOUNTED OCCUPANCY SENSOR, WATTSTOPPER PART # DT-300
(triangle)	CEILING MOUNTED OCCUPANCY SENSOR, WATTSTOPPER PART # DT-200
3	CEILING MOUNTED OCCUPANCY SENSOR, WATTSTOPPER PART # WT-2200
4	CEILING MOUNTED OCCUPANCY SENSOR, WATTSTOPPER PART # WT-2250
PE	PHOTOCELL, WATTSTOPPER PART # EM-24
W	WALL SWITCH OCCUPANCY SENSOR, WATTSTOPPER PART # DW-100
(checkered square)	CLASSROOM SWITCH STATION, SEE SWITCH DETAIL ON INTERIOR LIGHTING SHEETS.
S	STANDARD TOGGLE SWITCH
S_3	THREE WAY TOGGLE SWITCH
S_K	KEYED TOGGLE SWITCH
S_D	0-10 VOLT DIMMER SWITCH, WATTSTOPPER PART # H4FBL3PTC

6 / E1.00 LIGHTING SYMBOL SCHEDULE
NTS

EMERGENCY LIGHTING NOTES

1. CIRCUITING FOR EMERGENCY, NIGHT LIGHT AND EXIT LIGHTS NOT SHOWN ON FLOOR PLANS FOR CLARITY.
2. LIGHTING FIXTURES CONNECTED TO EMERGENCY LIGHTING CIRCUITS ARE IDENTIFIED BY THE FOLLOWING SYMBOLS AND SUFFIXES:

   ** = FIXTURE TYPE DESIGNATION
3. TWO OR MORE EMERGENCY CIRCUITS SHALL SERVE EACH AREA WITH ALTERNATE FIXTURES CONNECTED TO EACH. EMERGENCY CIRCUITS ARE IDENTIFIED BY KEYNOTE ON ALL INTERIOR LIGHTING SHEETS. AREAS WITHOUT DEDICATED EMERGENCY CIRCUITS SHALL UTILIZE NEAREST AVAILABLE EMERGENCY LIGHTING CIRCUITS.
4. EMERGENCY FIXTURES WITH "E" SUFFIX SHALL BE FURNISHED WITH AN AUTOMATIC LOAD CONTROL RELAY (ALCR), "LVS CONTROLS" PART # EPC-1, (EPC-1-D FOR 0-10V DIMMED FIXTURES), OR EQUAL. EXTEND AREA EMERGENCY CIRCUIT IN SEPARATE CONDUIT TO EMERGENCY FIXTURES. PROVIDE A SWITCHED AND UNSWITCHED NORMAL POWER CONDUCTOR TO ALL FIXURES WITH AN ALCR DEVICE. GROUPS OF EMERGENCY FIXTURES IN AREAS ON THE SAME SWITCHLEG ARE PERMITTED TO SHARE AN ALCR DEVICE.
5. NIGHT LIGHTING FIXTURES ARE IDENTIFIED BY THE FOLLOWING SYMBOLS:

   NL NL NL
6. NIGHT LIGHTING FIXTURES SHALL BE CONNECTED TO UNSWITCHED CONDUCTOR TO PROVIDE CONSTANT OPERATION.

7 / E1.00 EMERGENCY LIGHTING NOTES
NTS

GMC
1219 Wayne Street
Columbia, SC 29201
T 803.766.1235
GMCNETWORK.COM

SOUTH CAROLINA BUFORD GOFF & ASSOCIATES, INC. No. 000022 CERTIFICATE OF AUTHORIZATION

SOUTH CAROLINA REGISTERED PROFESSIONAL ENGINEER No. 14435 BRIAN CURTIS MELSON 10/24/2019

Buford Goff & Associates, Inc. Engineers & Planners
1331 Elmwood Ave. Suite 200 Columbia, SC 29201 Phone (803) 254-6302

ISSUE	DATE
BID DOCUMENTS	10.24.19

DRAWN BY: MTFH
CHECKED BY: BCM

MILLBROOK ELEMENTARY SCHOOL - ADDITIONS AND RENOVATIONS

255 E PINE LOG RD, AIKEN, SC 29803

GMC # ACOL180004

LIGHTING DETAILS

E1.00

10/17/2019 11:53:14 AM

Order Plans @ WWW.LDILine.com