CLICK TO JUMP TO INDEX

Design No. D925

Restrained Assembly Ratings—3/4, 1, 1-1/2, 2 or 3 Hr (See Items 1, 6 and 10)
Unrestrained Assembly Rating—0 Hr (See Items 3, 4, 4A and 10)
Unrestrained Beam Ratings—1, 1-1/2, 2, 3 and 4 Hr (See Items 4, 4A and 10)

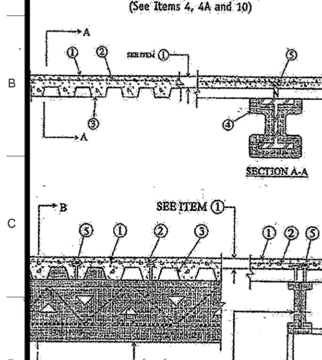

Supports—W8x28 or W12x16 steel beam or steel Joists, 10K1 or 16K2 min size with a max tensile stress of 30,000 psi or 12K3 min size with a max tensile stress of 24,000 psi. Or joist girders (not shown), composite or noncomposite. Welded or bolted to end supports. Joist Girder designed per S.J.I. specifications for a max tensile stress of 30 ksi. May be either uncoated or provided with a shop coat of paint. For the 2 h or less Restrained or Unrestrained Beam Ratings, top and bottom chords shall each consist of two angles with a min total area of 0.96 and 0.77 sq in., respectively. Web members shall be either round bars or angles. Min area of the end diagonal web shall be 0.444 sq in. Min area of each of the first six interior diagonal webs shall be 0.406 sq in. All other interior webs shall have a min area of 0.196 sq in. For the 3 h Restrained or Unrestrained Beam Ratings, each of the top and bottom chords shall each consist of two angles with a min total area of 1.74 sq in. Web members shall be either round bars or angles. Min area of each of the first five end diagonal webs shall be 0.886 sq in. All other interior webs shall have a min area of 0.441 sq in. For the 4 h Restrained or Unrestrained Beam Ratings, each of the top and bottom chords shall consist of two angles with a min total area of 1.74 sq in. Web members shall be either round bars or angles. Min area of each of the first five end diagonal webs shall be 0.886 sq in. All other interior webs shall have a min area of 0.441 sq in. Compression web members with a slenderness ratio greater than 60, shall be limited to 80 percent of their allowable design load. Bridging per S.J.I. specifications is required when noncomposite joists are used. For noncomposite joists, steel filler pieces of proper size, 1 to 2 in. long shall be welded to and between the top chord angles at midway between all top chord panel points.
As alternate to double angles, (not shown) structural tee sections may be used for top and bottom chords as follows:

Restrained Or Unrestrained Beam Ratings, H	Min Size Section Top Chord	Bottom Chord
1, 1-1/2 or 2	ST1.5X3.75	ST1.5X2.85
3 or 4	ST3X6.25	ST3X6.25

1. Normal Weight or Lightweight Concrete—Normal weight concrete carbonate or siliceous aggregate, 3500 psi compressive strength, vibrated. Lightweight concrete, expanded shale, or slate aggregate by rotary-kiln method, or expanded clay aggregate by rotary-kiln or sintered-grate

FIRE RESISTANCE RATINGS - ANSI/UL263 (BXUV)—*Continued*

method, 3000 psi compressive strength, vibrated, 4 to 7 percent entrained air.

Restrained Assembly Rating, Hr	Concrete (Type)	Concrete Unit Weight, pcf.	Concrete Thickness, In.
1	Normal Weight	147-153	3-1/2
1-1/2	Normal Weight	147-153	4
2	Normal Weight	147-153	4-1/2
3	Normal Weight	147-153	5-1/4
3/4 or 1 (See Item 6)	Lightweight	107-113	2-1/2
1	Lightweight	107-120	2-5/8
1-1/2	Lightweight	107-113	3
2	Lightweight	107-113	3-1/4
2	Lightweight	107-116	3-1/4*
2	Lightweight	114-120	3-1/2
3	Lightweight	107-113	4-3/16
3	Lightweight	114-120	4-7/16

*For use with 2 or 3 in. steel floor and form units only.

2. Welded Wire Fabric—6 x 6, 10 x 10 SWG.
3. Steel Floor and Form Units*—Composite 1-1/2, 1-5/8, 2 or 3 in. deep galv units or 4-1/2 in. deep noncomposite galv units. Fluted units may be uncoated or phosphatized/painted. Min gauges are 22 MSG for fluted and 20/20 MSG for cellular units. The following combinations of units may be used:
(1) All 18, 24, 26 28 or 36 in. wide cellular.
(2) All fluted.
(3) One or two 3 in. deep, 12 in. wide, 18/18 MSG min cellular units, alternating with 3 in. deep fluted or other cellular.
(4) Any blend of fluted and 18, 24, 26, 28, or 36 in. wide cellular.
(5) 3 in. deep, 30 in. wide cellular with 8-1/8 in. wide valley alongside joints may be used when 3/8 in. diam reinforcing bars are placed 1-1/2 in. to each side of side joints and 1 in. above bottom of units.
(6) Corrugated, 1-5/16 in. deep, 30 in. wide, 24 MSG min galv units with shear wires factory welded to deck corrugations. Welded to supports 12 in. OC. through welding washers. For shear wire spacing of 8 in. or less the steel deck stress shall not exceed 20 KSI. For shear wire spacing greater than 8 in. OC. but less than or equal to 12 in. OC. steel deck stress shall not exceed 12 KSI.
ASC Pacific Inc.—24 in. wide Types B, BF-24, BR, BMOO, BRMOO, N, NF, 2W24, 3W24, 2WF24, 3WF24; 30 in. wide Types, B, BF-30, BR; 36 in. wide Types B-36, 2W36, 3W36, 2WF36, 3WF36; 24 or 30 in. wide Types ASC2 or ASC3.
Bowman Metal Deck/Wheeling Corrugating Co., Div. of Wheeling-Pittsburgh Steel Corp.—30 in. wide, Types 1-1/2 in. V-Grip, 1-1/2 in. RV-Grip, 2 in. VW; 24 in. wide, Types 1-1/2 in. VW4, or 3 in. V-Grip, 3 in. VW3, 212VW2-Wireway, 312VW2-Wireway, 208VW3-Wireway, 258VW3-Wireway; 24 or 32 in. wide Types 208V-Grip, 258V-grip; 24 or 36 in. wide Types 212V-Grip, 312V-Grip; 36 in. wide Types 212VW3-Wireway, 312VW3-Wireway. Types 1-1/2 in. V-Grip, 212V-Grip and 312V-Grip may be phos/ptd.
Components for field-assembled cellular metal raceway units:
Raceway Bottom—24 or 36 in. wide Types 212 VS, 312 VS; 24 or 36 in. wide Types 208 VS, 258 VS.
Raceway Cover Plate—Types CP-12, CP-16.
Raceway Divider—Type DC-20, DC-25.
Raceway Isolation Trough—Types T-20, T-25, T-30.
Cheng Ho Steel Co., Ltd.—24 or 36 in. wide Types LF2, LF3.
Consolidated Systems, Inc.—24 in. wide Types CFD-2, CFD-3; 24, 30 or 36 in. wide Type CFD-1.5; 24 or 36 in. wide Types Mac-Lok 2, Mac-Lok 3; 24 in. wide, Types B2C, B2FC, NC, NFC; 30 in. wide Type B3C; 12 in. wide Mac-Way cellular 45 MOW, 2-633 MTWA, 3-633 MTWA, 3-633 MTWV, 3-633 MTWV+, 24 in. wide Type Versa-Dek.
Elixir Industries, Metal Deck Div.—24, 30 or 36 in. wide Types LXR-B, LXR-B inverted; 24 or 36 in. wide Type LXR-3W.
Epic Metals Corp.—24 in. wide Types EC150, ECP150, EC300, ECP300, EC366, ECP366, EC150, EC300 inverted, Epicore A; 30 in. wide Types ECB150, ECBR150; 36 in. wide Types EC266.
Robertson, A United Dominion Co.—QL Types, 24 in. wide 3 or 3 inverted, UKX, UKX-3, 2 in. 99, AKX, 21 or 21 inverted, 121, NKX, TKX; 24 or 30 in. wide GKX, GKX-A; 36 in. wide 99, AKX, WKX; 24 26, 94, 36 in. wide NKX; 1.5NKC, NKC, AKX, 2 or 3 in. TKC; 12 in. wide noncomposite Sec. 12; 17 in. wide 21; 26 or 28 in. wide UKX, 87.5 cm wide. Side joints of QL, 99, 121, WKX, TKX, TKC, and Metric units—QL-77-900; QLC-78-900; may be welded together 60 in. O.C. Side joints of 99, AKX, WKX, GKX, GKX-A, TKX and Metric units —QL-77-900 and QLC-78-900 may be fastened together with min 1 in. long No. 12x14 self-drilling, self-tapping steel screws 36 in. O.C.
Les Acies Canam Inc.—36 in. wide, 1-1/2 in. Type P3615HB. The max superimposed loadings for Type P3615HB units shall not

FIRE RESISTANCE RATINGS - ANSI/UL263 (BXUV)—*Continued*

exceed 250 PSF. For single spans, the use of the units shall be limited to 5 ft. 6 in., 6 ft 0 in. and 6 ft 6 in. max spans for the 22, 20 and 18 gauge units, respectively. For multiple spans, 18 gauge units may be used on a max 7 ft 6 in. span with a max total superimposed loading of 240 PSF.
BHP Lysaght—Taiwan Ltd.—24 in. wide Type 2W24 and 36 in. wide Types 2W36 and 3W36.
United Steel Deck, Inc.—24 in. wide, Types 1-1/2, 2 or 3 in. LOK-Floor and LOK-Floor Cell; 36 in. wide, Types 2 or 3 in. LOK-Floor and LOK-Floor Cells; 24 in. wide, Types N-LOK and N-LOK Cell; 24, 30 or 36 in. wide, Type 1-1/2 in. B-LOK and B-LOK Cell.
Verco Mfg., Inc.—Formlok types, 24 or 36 in. wide, W2 and W3; 24 in. wide, B, BN, BR; 30 in. wide B, BR; 12 in. wide W2 or W3 units may be blended with 24 or 36 in. wide W2 or W3, respectively.
Vulcraft, Div. of Nucor Corp.—24, 30 or 36 in. wide, Type 1.5 VL, 1.5 VLI, 1.5 VLP; 24 or 36 in. wide. Types 2VLI, 2VLP, 3VLI, 3 VLP.
Walker Div. of Butler Mfg. Co.—24 in. wide Types 2 or 3 in. WDR; 16, 30, 31 or 32 in. wide 2V, 2Vsubv, 3V, 3Vsubv.
Wheeling Corrugating Co., Div of Wheeling-Pittsburgh Steel Corp.—30 in. wide Types SB-150, -150N, -150NR, -150R; 30 or 36 in. wide Types SB-B16LF, -B16LFR; 24 or 36 in. wide Types P20LF, SB-P21LF, -P31LF; 24 in. wide Types P20LF, SB-200, -300. Type SB-B16LFR may be phos/ptd.

Spacing of welds attaching units to supports shall be 12 in. OC for 12, 24 and 36 in. wide units, four welds per sheet for 30 in. wide units, 6 in. OC for 18 in. wide and Sec. 12 units. Unless noted otherwise, adjacent units button-punched or welded together 36 in. OC alongside joints. Adjacent 18 in. wide units welded together 30 in. OC alongside joints. For 3 Hr Rating, units with overlapping type side joints welded together 24 in. OC max.
The Unrestrained Assembly Rating is equal to the Unrestrained Beam Rating for a max of 3 Hr and is limited to the following floor units and spans:
(a) 1-1/2, 2 and 3 in. deep, 24 in. wide, 22 MSG or thicker fluted with clear spans not more than 7 ft, 8 in.
(b) 1-1/2, 2 and 3 in. deep, 24 in. wide, 20 MSG or thicker fluted with clear spans not more than 8 ft, 8 in.
(c) 1-1/2 and 2 in. deep, 24 in. wide, 160 MSG or thicker fluted and 18/18 MSG or thicker cellular with clear spans not more than 9 ft, 11 in.
(d) 3 in. deep, 36 in. wide, 18 MSG or thicker fluted and 24 in. wide, 20/18 MSG or thicker cellular with clear spans not more than 13 ft, 2 in.

For assemblies utilizing 3-1/4 in. lightweight concrete topping with a max Restrained Assembly Rating of 2 Hr, the Unrestrained Assembly Rating is equal to the Unrestrained Beam Rating and is limited to the following floor units and spans:
(a) 1-1/2, 2, and 3 in. deep, 24 or 36 in. wide, 22 MSG fluted and 20/20 MSG cellular with clear spans not more than 9 ft, 6 in.
(b) 2 and 3 in. deep, 24 or 36 in. wide 20 MSG fluted and 20/20 MSG cellular with clear spans not more than 10 ft, 0 in.
(c) 3 in. deep, 24 in. wide, 20 MSG fluted and 20/20 MSG cellular with clear spans not more than 13 ft, 2 in.

4. Spray-Applied Fire Resistive Materials—Applied by mixing with water and spraying in one or more coats to a final thickness as shown in the tables below, to steel beam surfaces which must be clean and free of dirt, loose scale and oil. Min avg and min ind density of 15/14 pcf, respectively for Types MK-6/CBF, MK-6/ED, MK-6/HY, MK-6s, RG. Min avg and min ind density of 22/19, respectively for Types KM-601, Z-106. For method of density determination, refer to Design Information Section.

Restrained Assembly Rating Hr	Unrestrained Assembly Rating Hr	Unrestrained Beam Rating Hr	Spray-Applied Fire Resistive Materials Thk, In. W8x28 Beam	W8x28 Beam Supporting All Fluted Floor Units	W12x16 Beam	W12x16 Beam Supporting All Fluted Floor Units
1	1	1	1/2, 11/16**	7/16, 5/8**	11/16, 1-1/8**	5/8, 1**
1-1/2	1	1	1/2, 11/16**	7/16, 5/8**	11/16, 1-1/8**	5/8, 1**
1-1/2	1-1/2	1-1/2	13/16, 1-1/16**	3/4, 1**	1-1/8, 1-7/16**	1, 1-3/8**
2	1	1	1/2, 11/16**	7/16, 5/8**	11/16, 1-1/8**	5/8, 1**
2	2	2	1-1/16, 1-5/16**	1, 1-3/16**	1-7/16, 1-13/16**	1-3/8, 1-9/16**
3	1-1/2	1-1/2	13/16	3/4	1-1/8	1
3	3	3	1-9/16	1-5/16	2-1/8	1-3/4
3	3	4	2	1-5/8	2-11/16	2-3/16

**This thickness applies when optional Item 10 is used over 3-1/4 in. light weight concrete topping.

FIRE RESISTANCE RATINGS - ANSI/UL263 (BXUV)—*Continued*

The thicknesses of Spray-Applied Fire Resistive Materials shown in the table below are applicable when the thickness applied to the beams' lower flange edges is reduced to one-half that shown in the table.

Restrained Assembly Rating Hr	Unrestrained Assembly Rating Hr	Unrestrained Beam Rating Hr	Spray-Applied Fire Resistive Materials Thk, In. W8x28 Beam	W8x28 Beam Supporting All Fluted Floor Units	W12x16 Beam	W12x16 Beam Supporting All Fluted Floor Units
1	1	1	9/16	7/16+	3/4	5/8
1-1/2	1	1	9/16	7/16+	3/4	5/8
1-1/2	1-1/2	1-1/2	7/8	3/4	1-3/16	1
2	1	1	9/16	7/16+	3/4	5/8
2	2	2	1-3/16	1	1-5/8	1-3/8
3	1-1/2	1-1/2	7/8	3/4	1-3/16	1
3	3	3	1-3/4	1-9/16	2-3/8	2-1/8
3	3	4	2-5/16	2-1/16	3-1/8	2-3/4

+Thickness applied to beams' lower flange edges shall be a minimum of 1/4 in.

Restrained Assembly Rating Hr	Unrestrained Assembly Rating Hr	Unrestrained Beam Rating Hr	Spray-Applied Fire Resistive Materials Thk - In. For 10K1 Joists Spaced More Than 4 ft OC	4 ft or Less OC	Joist Girder
1	1	1	1-1/8	15/16	1-1/8
1-1/2	1-1/2	1-1/2	1-5/8	1-7/16	1-3/4
2	1	1	1-7/16	1-7/16	—
2	2	2	2-3/16	1-7/8	2-1/4
3	3	3	3-1/2	2-13/16	2-7/8
3	3	4	—	—	2-7/8

Restrained And Unrestrained Assembly Rating Hr	Unrestrained Beam Rating Hr	Spray-Applied Fire-Resistive Mtls Min Thkns In. For 12K3 Or 16K2 Joists Spaced More than 4 Ft OC	4 Ft or Less OC
1	1	15/16	7/8
1-1/2	1-1/2	1-1/2	1-5/16
2	2	2-1/16	1-13/16
3	3	3-1/2	2-13/16

Grace Construction Products—Types KM-601, MK-6/HY, MK-6s, RG, Z-106.
Grace Korea Inc.—Types MK-6/CBF, MK-6/ED, MK-6/HY, MK-6s, Z-106.

4A. Alternate Spray-Applied Fire Resistive Materials—Applied by mixing with water and spraying in one or more coats to a final thickness as shown in the tables below to steel beam surfaces which must be clean and free of dirt, loose scale and oil. The thicknesses shown in the table below are applicable to beams supporting all fluted floor or form units. Min avg and min ind density of 40/36 pcf respectively. For density determination refer to Design Information Section.

Restrained Assembly Rating Hr	Unrestrained Assembly Rating Hr	Unrestrained Beam Rating Hr	Spray-Applied Resistive Materials Thk, In. W8x28 Beam Supporting Fluted Floor Units Only
1	1	1	7/16, 5/8**
1-1/2	1-1/2	1-1/2	3/4, 1**
2	1	1	7/16, 5/8**
2	2	2	1, 1-3/16**
3	1-1/2	1-1/2	3/4
3	3	3	1-5/16
3	3	4	1-5/8

Restrained Assembly Rating Hr	Unrestrained Assembly Rating Hr	Unrestrained Beam Rating Hr	Spray-Applied Fire Resistive Materials Thk - In. For 10K1 Joists Spaced More Than 4 ft OC	4 ft or Less OC	Joist Girder
1	1	1	1-1/8	15/16	1-1/8
1-1/2	1-1/2	1-1/2	1-5/8	1-7/16	1-3/4
2	1	1	1-7/16	1-7/16	—
2	2	2	2-3/16	1-7/8	2-1/4
3	3	3	3-1/2	2-13/16	2-7/8
3	3	4	—	—	2-7/8

FIRE RESISTANCE DIRECTORY (BXRH)

FIRE RESISTANCE RATINGS - ANSI/UL263 (BXUV)—*Continued*

Restrained And Unrestrained Assembly Rating Hr	Unrestrained Beam Rating Hr	Spray-Applied Fire-Resistive Mtls Min Thkns In. For 12K3 Or 16K2 Joists Spaced More than 4 Ft OC	4 Ft or Less OC
1	1	15/16	7/8
1-1/2	1-1/2	1-1/2	1-5/16
2	2	2-1/16	1-13/16
3	3	3-1/2	2-13/16

**This thickness applies when optional Item 10 is used over 3-1/4 in. light weight concrete topping.
Grace Construction Products—Type Z-146
Grace Korea Inc.—Type Z-146.

5. Shear-Connector-Studs-Optional—Studs 3/4 in. diam by 3 in. long, for 1-1/2 in. deep form units to 5-1/4 in. long for 3 in. deep form units, headed type or equivalent per AISC specifications. Welded to the top flange of the beam through the steel form units.
6. Electrical Inserts—(Not shown) Classified as "Outlet Boxes and Fittings Classified for Fire Resistance".
(1) H. H. Robertson Co.—Preset Inserts.
For use with 2-1/2 in. lightweight concrete topping over QL-WKX steel floor units. Installed over factory-punched holes in floor units per accompanying installation instructions. Spacing shall not be more than one insert in each 14 sq ft of floor area with spacing along floor units not less than 48 in. O.C. The holes cut in insert cover for passage of wires shall be no more than 1/8 in. larger diam than wire. Restrained Assembly Rating is 3/4 hr with Tapmate II-FS-1 and 1 hr with Tapmate II-FS-2 inserts.
H. H. Robertson Co.—Tapmate II-FS-1, II-FS-2; Series KEB.
(2) Walker, Div. of Butler Mfg. Co.—After set Inserts. Single-service after set inserts installed per accompanying installation instructions in 2-1/2 in. diam hole core-drilled through min 3-1/4 in. thick concrete topping to top of cell of any min 3 in. deep cellular steel floor unit specified under Item 3. Spacing shall be no more than one insert in each 10 sq ft of floor area in each span with a min center to center spacing of 16 in. If the high potential and low potential raceways of the cellular steel floor unit are separated by a valley filled with concrete, the center to center spacing of the high potential and low potential single-service after set inserts may be reduced to a min of 7-1/2 in. Restrained Assembly Rating is 2 hr or less with internally protected Type 436 after set insert with Type M4-, M6- or M8-Series single-service activation fitting.
Walker, Div. of Butler Mfg. Co.—Internally protected Type 436 after set insert with Type M4-, M6- or M8- Series single-service activation fitting.
7. Roof Covering Materials*—(Optional, not shown) Consisting of materials compatible with insulations described herein which provide Class A, B or C coverings. See Built-Up Roof Covering Materials in Building Materials Directory.
8. Insulating Concrete—(not shown) Optional. Various types of insulating concrete prepared and applied in the thickness indicated:
A. Vermiculite Concrete—(not shown) Optional.
1. Blend 6 to 8 cu ft. of Vermiculite Aggregate* to 94 lb Portland Cement and air entraining agent. Min thickness of 2 in. as measured to the top surface of the structural concrete or foamed plastic (Item 9) when it is used.
Siplast Inc.
Vermiculite Products, Inc.
2. Blend 3.5 cu ft. of Type NVC Concrete Aggregate* or Type NVS Vermiculite Aggregate* to 94 lb Portland Cement. Slurry coat 1/8 in. thickness beneath foamed plastic (Item 9) when used, 1 in. min topping thickness.
Siplast Inc.
Vermiculite Products, Inc.
Vermiculite concrete may be covered with Roof Covering Materials (Item 7).
B. Cellular Concrete-Roof Topping Mixture*—Concentrate mixed with water and Portland Cement per manufacturer specifications. 28-day min compressive strength of 190 psi as determined with ASTM C495.
Elastizell Corp. of America—Type II. Mix #1 of cast dry density 39 (+ or -) 3.0 pcf, Mix #2 of cast dry density 40 (+ or -) 3.0 pcf, Mix #3 of cast dry density 47 (+ or -) 3.0 pcf.
Siplast Inc.—Mix No. 1 or 2. Cast dry density of 32+3 (Mix No. 1) or 36+3 (mix No. 2) pcf.
Redco Ite Inc.—Cast dry density of 29 (+ or -) 3.0 pcf.
C. Cellular Concrete-Roof Topping Mixture*—Foam Concentrate mixed with water, Portland Cement and UL Classified Vermiculite Aggregate

FIRE RESISTANCE DIRECTORY (BXRH)

FIRE RESISTANCE RATINGS - ANSI/UL263 (BXUV)—*Continued*

per manufacturer's application instructions. Cast dry density of 33 (+ or -) 3.0 pcf and 28-day compressive strength of min 250 psi as determined in accordance with ASTM C495-86.
Siplast Inc.—Mix No. 3.
9. Foamed Plastic*—(Optional-not shown) For use only with vermiculate or cellular concretes-Rigid polystyrene foamed plastic insulation having slots and/or holes sandwiched between vermiculite concrete slurry which is applied to the normal or lightweight concrete surface and concrete topping. Max thickness to be 8 in.
Siplast Inc.
Vermiculite Products, Inc.
10. Roof Insulation-Mineral and Fiber Boards* or Foamed Plastic*—(Optional, not shown)—Mineral and fiber boards or polyisocyanurate roof insulation applied over concrete floor with no restriction on board thickness. When mineral and fiber boards or polyisocyanurate roof insulation are used the unrestrained beam rating shall be increased by a min of 1/2 hr. See Mineral and Fiber Boards (CERZ) or Foamed Plastic (CCVW) category for names of Manufacturers.
*Bearing the UL Classification Marking

FIRE RESISTANCE DIRECTORY (BXRH)

FIRE RESISTANCE RATINGS - ANSI/UL263 (BXUV)—*Continued*

Design No. X524

Ratings—1 and 2 Hr. (See Item 9)

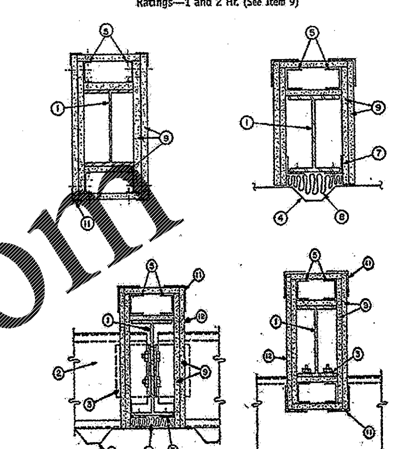

1. Steel Column—Column sizes may vary. Max depth 60 in., min flange 4 in. wide by 3/16 in. thick. Min web thickness 0.090 in. All columns to be designed in accordance with AISC specifications.
In addition to the above requirements, the weight to perimeter (W/D) ratio shall not be less than 0.27.
W=Cross-sectional area (ft2) X 490.
D=Perimeter of steel column, (2 X flange width (in.) + (2 X column depth (in.)) -
2. Girts—"Z" of "C" shape girts fabricated from 0.056 to 0.120 in. thick steel. Girts shall be 6 to 10 in. deep with 2-1/2 to 3 in. wide flanges. Secured to columns with girt clips, (Item 3).
3. Girt Clips—Fabricated from 3 by 3 by 0.115 in. thick steel. Clips secured to column with 1-1/2 in. long, 1/2 in. diam bolts and nuts.
4. Steel Wall Panels—No. 26 MSG (min) galv steel.
5. Wallboard Attachment Studs—No. 26 MSG (min) galv steel, 1-5/8 in. deep with 1-3/8 in. legs and 1/4 in. stiffening flanges. Studs cut 1/2 to 3/4 in. less in length than column height. Additional studs located inside and along flanges and at the web center when column depth exceeds 36 in.
6. Wallboard Attachment Channels—(Not shown)—No. 26 MSG (min) galv steel, 1-5/8 in. deep with nom 1 in. legs. Required horizontally every 8 ft across web only when column depth exceeds 36 in.
7. Wallboard Attachment Angles—No. 26 MSG (min) galv steel, 1-1/2 and 2 in. legs, secured to column with No. 12-24 by 1-1/2 in. long self drilling screws spaced 24 in. OC vertically.
8. Batts and Blankets*—Nom 1 to 2 in. thick mineral wool batts, placed between column flanges and steel wall panel.
Thermafiber LLC—Type SAFB.
9. Wallboard, Gypsum*—Nom 1/2 in. thick, 4 ft wide.
For 1 Hr Rating—Two layers of wallboard to be used. Wallboard applied vertically, attached to steel studs and/or angles with screws spaced 12 in. OC. Horizontal wallboard joints staggered 30 in. OC with screws located 1 in. from the joint. When column depth exceeds 36 in.,

FIRE RESISTANCE DIRECTORY (BXRH)

FIRE RESISTANCE RATINGS - ANSI/UL263 (BXUV)—*Continued*

Design No. P732

Restrained Assembly Ratings—1, 1-1/2, 2 or 3 Hr (See Item 10)
Unrestrained Assembly Ratings—3/4, 1, 1-1/2, 2 or 3 Hr (See Item 10)
Unrestrained Beam Ratings—1, 1-1/2, 2 or 3 Hr (See Item 10)

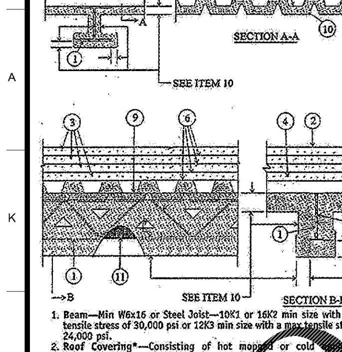

1. Beam—Min W6x16 or Steel Joist—10K1 or 16K2 min size with a max tensile stress of 30,000 psi or 12K3 min size with a max tensile stress of 24,000 psi.
2. Roof Covering*—Consisting of hot mopped or cold application bituminous materials compatible with the insulation(s) described herein which provide Class A, B or C coverings. See Roofing Materials and Systems Directory—Roof Covering Materials (TEVT).
2A. In lieu of Item 2, roof covering consisting of single-ply Roofing Membrane* that is either ballasted, adhered or mechanically attached as permitted under the respective manufacturer's Classification. See Fire Resistance Directory—Roof Membrane (CHCI).
2B. Metal Roof Deck Panels*—(Not shown)—In addition to or in lieu of Item 2 or 2A, the roof covering may consist of a mechanically fastened metal roof deck panel assembly. See Fire Resistance Directory —Metal Roof Deck Panels (CETW).
3. Roof Insulation—Foamed Plastic—Polyisocyanurate foamed plastic insulation boards nom 48 by 48 or 96 in., to be applied in one or more layers. Boards to be installed with end joints staggered a min of 6 in. Min thickness shall be selected from the Table below. No limit on max overall thickness.

Restrained Or Unrestrained Assembly Rating Hrs	Min Insulation Tkns, In. With Gypsum Wallboard	Without Gypsum Wallboard
1	1	2
1-1/2	1-1/2	3
2	2	3
3	3	4

Apache Products Co.—Type Apache Pyrox
Atlas Roofing Corp.—Type AC Foam II
Celotex Corp.—Types L, 0
Firestone Building Products Co.—"ISO 95+FK", "ISO 95+GL", "ISO 95+GW", "Rhoflex Isocyanurate FK", "Rhoflex Isocyanurate GL", "Rhoflex Isocyanurate GW".
Loadmaster Systems Inc.—Type Loadmaster polyisocyanurate insulation
NRG Barriers Inc.—E'NRG'Y 2, PSI 25

FIRE RESISTANCE DIRECTORY (BXRH)

FIRE RESISTANCE RATINGS - ANSI/UL263 (BXUV)—*Continued*

Rmax Inc.—Type Multi-Max FA
Johns Manville—Types N1, N2
3A. Foamed Plastic*—Not Shown—As an alternate to Item 3, polyisocyanurate foamed plastic insulation boards, nom 48 by 48 or 96 in., with formed channels on the top side and a flat bottom face, to be applied in one layer. Min thickness as measured at the thinnest cross section of polyisocyanurate shall be in accordance with Item 3. No limit on max thickness (as measured at the thickest section of the board). Insulation covered with field applied 3/8 min thick nonveneer APA rated sheathing for use with Class A or C asphalt glass-mat or asphalt organic shingles. Sheathing installed with all joints offset min 6 in. from joints of insulation boards.
GAF Materials Corp.—Type INSUL-AIR.
NRG Barriers, Inc.—Type ISO-VENT.
3B. Building Units*—Polyisocyanurate foamed plastic insulation boards, nom 48 by 48 or 96 in., faced on the top surface with oriented strand board. Min thickness of the polyisocyanurate core is 1.3 in. No limit on max overall thickness. Boards to be installed with end joints staggered a min of 6 in. in adjacent rows. Adhesive (Item 6) may be applied between the building units and the vapor retarder (or gypsum wallboard if vapor retarder is not used).
Atlas Roofing Corp.-AC Foam Nail Base Insulation and Vented R as measured at the thinnest cross section of polyisocyanurate shall be in accordance with Item 3.
Celotex Corp.—Hy-Therm Nail-Line.
3C. Roof Insulation-Mineral and Fiber Boards*—(Not Shown)—Optional, Applied in one or more layers over the Foamed Plastic (Item 3) to be applied with adhesive (Item 6), asphalt or coal tar pitch (Item 7) or mechanically fastened (Item 8).
Johns Manville International Inc.
3D. Building Units*—(Not Shown)—Optional, Applied over the Foamed Plastic (Item 3) to be applied with adhesive (Item 6), asphalt or coal tar pitch (Item 7) or mechanically fastened (Item 8).
Johns Manville International Inc.
4. Gypsum Wallboard—(Not shown)—Classified or Unclassified—May be used to obtain various Restrained or Unrestrained Assembly Ratings as described in Item 10. Supplied in sheets nom 4 by 8 or 12 ft by 5/8 in. thick. Min weight 2.2 psf. Applied perpendicular to steel roof deck direction with end joints staggered ft in adjacent rows. End joints to occur over crest of steel roof units. See Gypsum Wallboard (CKNX) category for names of manufacturers.
5. Vapor Retarder-Sheathing Material*—(Optional)—(Not shown)—Vinyl film or paper scrim vapor barrier, applied to steel roof deck or gypsum wallboard with adhesive (Item 6), hot asphalt (Item 7) or laid loosely, overlapped approx in adjacent sheets. See Sheathing Material (CHIZ) category for names of manufacturers.
6. Adhesive*—(Optional)—The vapor retarder, the gypsum wallboard or the first layer of roof insulation may be secured with adhesive to the steel crest surfaces. Also used to attach the vapor retarder to gypsum wallboard, the first layer of insulation to vapor retarder or gypsum wallboard and each additional layer of insulation. Applied in 1/2 in. wide ribbons 6 in. OC at 0.4 gal/100 sq ft. See Adhesives (BYWR) category for names of manufacturers.
7. Asphalt or Coal Tar Pitch*—(Optional)—(Not shown) —The vapor retarder, the gypsum wallboard of the first layer of roof insulation may be secured with asphalt or coal tar pitch to the steel crest surfaces at a max rate of 15 lb/100 sq ft. Also used to attach the vapor retarder to gypsum wallboard, the first layer of insulation to vapor retarder or gypsum wallboard and each additional layer of roof insulation, applied at a max rate of 25 lb/100 sq ft.
8. Mechanical Fasteners—(Optional)—(Not shown) —Mechanical screw-type fastener with metal or plastic washer designed for the purpose may be used to attach one or more layers of insulation to steel roof deck.
9. Steel Roof Deck—(Unclassified)—Min 1-1/2 in. deep and 36 in. wide galv fluted steel deck. Min gauge is No. 22 MSG. Ends overlapped at supports a min 1-1/2 in. and welded to supports 12 in. OC and at side laps. Side laps fastened with 1/2 in. long hex head, self-drilling, self-tapping steel screws spaced a max of 36 in. OC.
Classified Steel Floor and Form Units*—Noncomposite 1-1/2 to 3 in. deep, 24 to 36 in. wide, min 22 MSG galvanized steel fluted units. Ends overlapped at supports a min 1-1/2 in. and welded to supports 12 in. OC and at side laps. Side laps fastened with 3/4 in. long No. 12 self-drilling, self-tapping steel screws at 36 in. OC. As alternate to screw fasteners adjacent units may be button-punched or welded together 36 in. OC along side joints.
Bowman Metal Deck/Wheeling Corrugating Co. Div of Wheeling-Pittsburgh Steel Corp.—Galv Types B, F and N, ptd/ptd units may be used for ratings up to 2 h.
Vulcraft, Div. of Nucor Corp.—Galv Types 1.5B, 1.5BI, 1.5F, 3N and 3NI, ptd/ptd units may be used for ratings up to 2 h.
Wheeling Corrugating Co. Div. Of Wheeling-Pittsburg Steel Corp.—Types B, BW, F and N, ptd/ptd units may be used for ratings up to 2 h.

FIRE RESISTANCE DIRECTORY (BXRH)

FIRE RESISTANCE RATINGS - ANSI/UL263 (BXUV)—*Continued*

Note: Type Z-106 Spray-Applied Fire Resistive Materials to be used with galv steel roof units only.
10. Spray-Applied Resistive Material*—Applied by mixing with water and spraying in more than one coat to final thicknesses as shown in the illustration above and in the table below to steel surfaces which must be clean and free of dirt, loose scale and oil. Steel deck surface must be "spatter" coated with Type SK-III Spray-Applied Fire Resistive Materials prior to application of spray-applied resistive material. Type SK-III spray-applied resistive material applied in accordance with the manufacturer's application instructions. Min average and min individual density of 15/14 pcf, respectively. For method of density determination, see Design Information Section. Thickness of the spatter coat is included in the total final thickness of the protection material.

Restrained Assembly Rating h	Unrestrained Assembly Rating h	Unrestrained Beam Rating h	OnSteelDeck With Gypsum Wallboard	Without Gypsum Wallboard	For 10K1 Joists Spaced On Beam	More Than 4 ft OC	4 ft or Less OC
1	1	1	11/16	[illegible]	1/2	1-1/8	15/16
1	1	1	1*	1-5/8*	1/2	1-1/8	15/16
1-1/2	1	1	3/4	[illegible]	9/16	1-5/16	1-5/16

Restrained Assembly Rating h	Unrestrained Assembly Rating h	Unrestrained Beam Rating h	OnSteelDeck With Gypsum Wallboard	Without Gypsum Wallboard	For 10K1 Joists Spaced On Beam	More Than 4 ft OC	4 ft or Less OC
[illegible]	[illegible]	[illegible]	1	1-3/8	3/4	1-7/16	1-7/16
1-1/2	[illegible]	[illegible]	1-1/2*	2-1/8*	3/4	1-7/16	1-7/16
2	[illegible]	1	1	1-1/2	3/4	1-7/16	1-7/16
[illegible]	[illegible]	1-1/2	1	1-1/2	3/4	1-7/16	1-7/16
[illegible]	2	2	1-1/4	1-11/16	1	2-3/16	2-3/16
[illegible]	2	2	2*	2-5/8*	1	2-3/16	2-3/16
[illegible]	1-1/2	1-1/2	1-1/2	2-1/8	1-3/16	3-1/4	2-13/16
3	2	2	1-1/2	2-1/8	1-3/16	3-1/4	2-13/16
3	3	3	1-7/8	2-7/16	1-1/2	3-1/4	2-13/16

Restrained And Unrestrained Assembly Rating Hr	Unrestrained Beam Rating Hr	Spray-Applied Fire-Resistive Mtls Min Thkns In. For 12K3 Or 16K2 Joists Spaced More than 4 Ft OC	4 Ft or Less OC
1	1	15/16	7/8
1-1/2	1-1/2	1-1/2	1-5/16
2	2	2-1/16	1-13/16
3	3	3-1/4	2-13/16

10A. Alternate Spray-Applied Fire Resistive Materials*—Applied by mixing with water and spraying in one or more coats to final thicknesses as shown in the table below to steel beam surfaces which must be clean and free of dirt, loose scale and oil. When steel deck is used the area between the steel deck and the beams top flange shall be filled. Min avg and min ind density of 22/19 pcf, respectively. For method of density determination, refer to Design Information Section

Restrained Assembly Rating h	Unrestrained Assembly Rating h	Unrestrained Beam Rating h	OnSteelDeck With Gypsum Wallboard	Without Gypsum Wallboard	For 10K1 Joists Spaced On Beam	More Than 4 ft OC	4 ft or Less OC
1	1	1	11/16	1	1/2	1-1/8	15/16
1	1	1	1*	1-5/8*	1/2	1-1/8	15/16
1-1/2	1	1"	3/4	1-1/4	9/16	1-5/16	1-5/16
1-1/2	1-1/2	1-1/2	1	1-3/8	3/4	1-7/16	1-7/16
1-1/2	1-1/2	1-1/2	1-1/2*	2-1/8*	3/4	1-7/16	1-7/16
2	1	1	1	1-1/2	3/4	1-7/16	1-7/16
2	1-1/2	1-1/2	1	1-1/2	3/4	1-7/16	1-7/16
2	2	2	1-1/4	1-11/16	1	2-3/16	2-3/16
2	2	2	2*	2-5/8*	1	2-3/16	2-3/16
3	1-1/2	1-1/2	1-1/2	2-1/8	1-3/16	3-1/4	2-13/16
3	2	2	1-1/2	2-1/8	1-3/16	3-1/4	2-13/16
3	3	3	1-7/8	2-7/16	1-1/2	3-1/4	2-13/16

Grace Construction Products—Types KM-601, Z-106.
Grace Korea Inc.—Type Z-106.
*No min insulation thickness required.

Restrained And Unrestrained Assembly Rating Hr	Unrestrained Beam Rating Hr	Spray-Applied Fire-Resistive Mtls Min Thkns In. For 12K3 Or 16K2 Joists Spaced More than 4 Ft OC	4 Ft or Less OC
1	1	15/16	7/8
1-1/2	1-1/2	1-1/2	1-5/16
2	2	2-1/16	1-13/16
3	3	3-1/4	2-13/16

Grace Construction Products—Types KM-601, Z-106.
Grace Korea Inc.—Type Z-106.
*No min insulation thickness required.

FIRE RESISTANCE DIRECTORY (BXRH)

FIRE RESISTANCE RATINGS - ANSI/UL263 (BXUV)—*Continued*

10B. Alternate Spray-Applied Fire Resistive Materials*—Applied by mixing with water and spraying in one or more coats to final thicknesses as shown in the table below to steel beam surfaces which must be clean and free of dirt, loose scale and oil. When steel deck is used, the area between the steel deck and the beams top flange shall be filled. Application to steel roof deck requires the installation of expanded metal lath. See Item 11A. Bin avg and min ind density of 40/36 pcf, respectively. For method of density determination, refer to Design Information Section.

Restrained Assembly Rating h	Unrestrained Assembly Rating h	Unrestrained Beam Rating h	OnSteelDeck With Gypsum Wallboard	Without Gypsum Wallboard	For 10K1 Joists Spaced On Beam	More Than 4 ft OC	4 ft or Less OC
1	1	1	11/16	1	1/2	1-1/8	15/16
1	1	1	1*	1-5/8*	1/2	1-1/8	15/16
1-1/2	1	1	3/4	1-1/4	9/16	1-5/16	1-5/16
1-1/2	1-1/2	1-1/2	1	1-3/8	3/4	1-7/16	1-7/16
1-1/2	1-1/2	1-1/2	1-1/2*	2-1/8*	3/4	1-7/16	1-7/16
2	1	1	1	1-1/2	3/4	1-7/16	1-7/16
2	1-1/2	1-1/2	1	1-1/2	3/4	1-7/16	1-7/16
2	2	2	1-1/4	1-11/16	1	2-3/16	2-3/16
2	2	2	2*	2-5/8*	1	2-3/16	2-3/16
3	1-1/2	1-1/2	1-1/2	2-1/8	1-3/16	3-1/4	2-13/16
3	2	2	1-1/2	2-1/8	1-3/16	3-1/4	2-13/16
3	3	3	1-7/8	2-7/16	1-1/2	3-1/4	2-13/16

Restrained And Unrestrained Assembly Rating Hr	Unrestrained Beam Rating Hr	Spray-Applied Fire-Resistive Mtls Min Thkns In. For 12K3 Or 16K2 Joists Spaced More than 4 Ft OC	4 Ft or Less OC
1	1	15/16	7/8
1-1/2	1-1/2	1-1/2	1-5/16
2	2	2-1/16	1-13/16
3	3	3-1/4	2-13/16

Grace Construction Products—Type Z-146
Grace Korea Inc.—Type Z-146
*No min insulation thickness required.

11. Nonmetallic Fabric Mesh—(Optional)—As an alternate to metal lath, glass fiber fabric mesh, weighing approx 2.5 oz/sq yd, polypropylene fabric mesh, weighing approx 1.25 oz/sq yd or equivalent, may be used to facilitate the spray application. The mesh is secured to one side of each joist web member. The method of attaching the mesh must be sufficient to hold the mesh and the spray applied Spray-Applied Fire Resistive Materials material in place during application until it has cured. An acceptable method to attach the mesh is by embedding the mesh in min 1/4 in. long beads of hot melted glue. The beads of glue shall be spaced a max of 12 in. OC along the top chord of the bar joist. Another method to secure the mesh is by 1-1/4 in. long by 1/2 in. wide hairpin clips formed from No. 18 SWG or heavier steel wire.
11A. Metal Lath—(Not Shown)(Required with Item 10B, optional with Items 10, 10A)—Metal lath shall be 3/8 in. expanded diamond mesh, weighing 2.5 lb per sq yd. Secured to underside of steel deck with No. 12 by 3/8 in. pan head self-drilling, self-tapping screws and steel washers with an outside diam of 1/2 in. screws spaced 12 in. OC in both directions with lath edges overlapped approx 3 in.
11B. Metal Lath—(Optional)—(Not shown)—Metal lath may be used to facilitate the spray application of Spray-Applied Fire Resistive Materials on steel bar joists and trusses. The diamond mesh, 3/8 in. expanded steel lath, 1.7 to 3.4 lb/sq yd is secured to one side of each steel joist with No. 18 SWG galv steel wire at joist web and bottom chord members spaced 15 in. OC max. When used, the metal lath is to be fully covered with Spray-Applied Fire Resistive Materials with no min thickness requirements.
*Bearing the UL Classification Marking

FIRE RESISTANCE DIRECTORY (BXRH)

FIRE RESISTANCE RATINGS - ANSI/UL263 (BXUV)—*Continued*

Design No. X772

Ratings—1, 1-1/2, 2, 3 and 4 h.

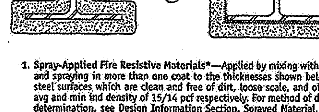

1. Spray-Applied Fire Resistive Materials*—Applied by mixing with water and spraying in more than one coat to the thicknesses shown below, to steel surfaces which are clean and free of dirt, loose scale, and oil. Min avg and min ind density of 15/14 pcf respectively. For method of density determination, see Design Information Section, Sprayed Material.
The thickness of Spray-Applied Fire Resistive Materials to be applied to all surfaces of the column (Item 1) required for rating periods of 1 h, 1-1/2 h, 2 h, 3 h, 4 h may be determined by the equation:

$$h = \frac{R}{1.05\,(W/D) + 0.61}$$

Where:
h = Spray-Applied Fire Resistive Materials thickness in the range 0.25-3.875 in.
R = Fire resistance rating in hours (1 - 4 h)
D = Heated perimeter of steel column in inches
W = Weight of steel column in lbs per foot
W/D = 0.33 to 6.62

As an alternate to the equation, the minimum thickness of Spray-Applied Fire Resistive Materials required for various fire resistance ratings of contour sprayed or boxed columns may be determined from the table below:

Min Column Size	W/D	Min Thk (in) 1 h	1-1/2 h	2 h	3 h	4 h
W6x9	0.33	1-1/8	1-1/2	2	2-1/2	3-1/8
W6x16	0.57	13/16	1-1/4	1-11/16	2-1/2	3-5/16
W8x28	0.67	3/4	1-3/16	1-3/8	2	2-11/16
W10x49	0.83	11/16	7/8	1-1/8	1-11/16	2-1/2
W14x228	2.49	5/16	1/2	9/16	7/8	1-1/4
W14x730	6.62	5/16	5/16	5/16	3/8	9/16

The thicknesses contained in the table below are applicable when the Spray-Applied Fire Resistive Materials applied to columns' flange tips are reduced to one-half that shown in the table below:

Min Column Size	W/D	Min Thk (in) 1 h	1-1/2 h	2 h	3 h	4 h
W6x9	0.33	1-1/8	1-5/8	2-1/16	2-15/16	3-13/16
W6x16	0.57	7/8	1-5/16	1-3/4	2-9/16	3-3/8
W8x28	0.67	13/16	1-3/16	1-1/2	2-1/4	2-15/16
W10x49	0.83	3/4	1-1/16	1-3/8	2-1/16	2-3/4
W14x233	2.49	5/16	1/2	11/16	1-3/16	1-5/8
W14x730	6.62	5/16	5/16	5/16	9/16	3/4

Construction Products Div., W. R. Grace & Co. of Canada Ltd.—Types MK-4 or MK-5.
Grace Construction Products—Types MK-4, MK-5, MK-6/HY, MK-6s, RG.
Grace Korea Inc.—Types MK-6/CBF, MK-6/ED, MK-6/HY, MK-6s.
Pyrok Inc.—Type LD.
Southwest Vermiculite Co., Inc.—Types 4, 5, 5EF, 5GP, 5MD, 8EF, 8GP, 8MD, 9EF, 9GP, 9MD.
Vermiculite Products, Inc.—Type MK-4 or MK-5.
2. Metal Lath—(Optional for contour application)—3.4 lb/sq yd galvanized or painted expanded steel lath. Lath shall be lapped 1 in. and tied together with No. 18 SWG galvanized steel; wire spaced vertically 6 in. O.C.
3. Steel Column—Wide flange steel column, min sizes as shown in the tables below.
*Bearing the UL Classification Marking

FIRE RESISTANCE DIRECTORY (BXRH)

Fire Resistance Ratings - ANSI/UL 263 (BXUV)—*Continued*

Design No. P516

Unrestrained Assembly Rating — 1 Hr
Unrestrained Beam Rating — 1 Hr

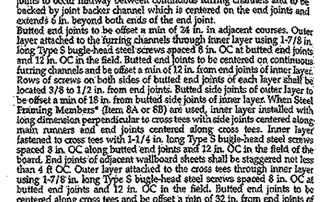

1. Metal Roof Deck Panels* — No. 26 MSG min galv or painted steel. Panels continuous over two or more spans. End laps to occur over purlins with panels overlapped a min of 4 in. A line of sealant or tape sealant may be used at panel side and end laps. See Roofing Materials and Systems Directory-Metal Roof Deck Panels (TJPV) category for names of manufacturers.
2. Panel Fasteners — As specified in the respective Classified Roof Deck Construction Number for the Metal Roof Deck Panel.
3. Batts and Blankets* — Any faced glass fiber batt material or mineral wool insulation bearing the UL Classification marking. See Batts and Blankets* (BZJZ) Category in Fire Resistance Directory or Batts and Blankets*(BKNV) in Building Materials Directory for list of Classified Companies.
4. Steel Roof Purlins — C — or Z — shaped, min 8 in. deep, weighing min 2.9 lb per lineal ft made from min No. 16 MSG galv or painted steel. Spaced max 60 in. OC. Purlins may be stiffened at the supports if required per structural design.
5. Beam — Steel I beam sections designed as structural supports to the roof purlins. Min weight of steel I beam is 2.9 lb per lineal ft.
6. Hanger Wire — No. 12 SWG or heavier galv steel wire; twist-tied to steel roof purlins or joists. Hanger wire attachment spaced not over 60 in. OC along cold-rolled channel, and located at ends of the cold-rolled channels at walls. When alternate Steel Framing Members* (Item 8A or 8B) are used, hanger wires are spaced 48 in. OC (at every third main runner/cross tee intersection). Hanger wires also located adjacent to each main runner splice location.
7. Cold Rolled Channel — Min No. 16 MSG galv or painted steel channels, 1-1/2 in. deep with 9/16 in. flanges. Spaced a max of 48 in. OC.
8. Furring Channel — No. 25 MSG galv steel, 2-5/8 in. wide, 7/8 in. deep, spaced 24 in. OC perpendicular to cold-rolled channels; secured to each cold-rolled channel with double strand of No. 18 SWG galv steel wire. As an alternate to the furring channels, Steel Framing Members* (Item 8A or 8B) may be used.
8A. Steel Framing Members* — (Not shown) — As an alternate to Item 8. Main runners nom 12 ft long, spaced 48 in. OC. Ends of main runners at walls to rest on wall angle, without attachment, with 1/2 to 3/4 in. end clearance. Primary cross tees (1-1/2 in. wide across flange) or cross channels, nom 4 ft long, installed perpendicular to main runners and spaced 16 in. OC. Additional primary cross tees or cross channels required 8 in. from and on each side of wallboard end joint.
ARMSTRONG WORLD INDUSTRIES INC —Type DFR-8000.
8B. Steel Framing Members* — (Not shown) — As an alternate to Items 8 and 8A. Main runners, cross tees, cross channels and wall angle as listed below:
a. Main Runners — Nom 10 or 12 ft long, 15/16 in. or 1-1/2 in. wide face, spaced 4 ft OC.
b. Cross Tees — Nom 4 ft long, 1-1/2 in. wide face or 15/16 in. wide face installed at sides of light fixtures, installed perpendicular to the main runners, spaced 24 in. OC. Additional cross tees or cross channels used at 8 in. from each side of butted wallboard end joints. The cross tees or cross channels may be riveted or screw attached to the wall angle or channel to facilitate the ceiling installation.
c. Cross Channels — Nom 4 ft long, installed perpendicular to main runners, spaced 24 in. OC.
d. Wall Angle or Channel — Painted or galv steel angle with 1 in. legs or channel with 1 in. legs, 1-9/16 in. deep attached to walls at perimeter of ceiling with fasteners 16 in. OC. To support steel framing member ends and for screw-attachment of the gypsum wallboard.
CGC INTERIORS, DIV OF
CGC INC— Type DGL or RX.
USG INTERIORS INC— Type DGL or RX.
9. Gypsum Board* — Any 5/8 in. thick gypsum wallboard bearing the

FIRE RESISTANCE DIRECTORY (BXRH)

Fire Resistance Ratings - ANSI/UL 263 (BXUV)—*Continued*

UL Classification Marking as to Fire Resistance. Two layers of 5/8 in. thick by 48 in. wide sheets installed with long dimension perpendicular to the furring channels. Inner layer attached to furring channels using 1-1/4 in. long Type S bugle-head steel screws spaced 8 in. OC along butted end joints and 12 in. OC in the field of the board. Butted end joints to occur midway between continuous furring channels and to be backed by joint backer channel which is centered on the end joints and extends 6 in. beyond both ends of the end joint.
Butted end joints to be offset a min of 24 in. in adjacent courses. Outer layer attached to the furring channels through inner layer using 1-7/8 in. long Type S bugle-head steel screws spaced 8 in. OC at butted end joints and 12 in. OC in the field. Butted end joints to be centered on continuous furring channels and be offset a min of 12 in. from end joints of inner layer. Rows of screws on both sides of butted end joints of each layer shall be located 3/8 to 1/2 in. from end joints. Butted side joints of outer layer to be offset a min of 18 in. from butted side joints of inner layer. When Steel Framing Members* (Item 8A or 8B) are used, inner layer installed with long dimension perpendicular to cross tees with side joints centered along main runners and end joints centered along cross tees. Inner layer fastened to cross tees with 1-1/4 in. long Type S bugle-head steel screws spaced 8 in. OC along butted end joints and 12 in. OC in the field of the board. End joints of adjacent wallboard sheets shall be staggered not less than 4 ft OC. Outer layer attached to the cross tees through inner layer using 1-7/8 in. long Type S bugle-head steel screws spaced 8 in. OC at butted end joints and 12 in. OC in the field. Butted end joints to be centered along cross tees and be offset a min of 32 in. from end joints of inner layer. Rows of screws on both sides of butted end joints of each layer shall be located 3/8 to 1/2 in. from end joints. Butted side joints of outer layer to be offset a min of 18 in. from butted side joints of inner layer. See Gypsum Board (CKNX) category for names of manufacturers.
*Bearing the UL Classification Mark

FIRE RESISTANCE DIRECTORY (BXRH)

FIRE RESISTANCE RATINGS - ANSI/UL263 (BXUV)—*Continued*

wallboard over web applied horizontally. Screws spaced 12 in. OC alternating between inside and outside flange attachment studs for outer web attachment. Screws spaced 12 in. OC for center web attachment. Joints staggered 12 in. OC with screws located 1 in. from joint.
For 2 Hr Rating—1/2 in. thick, three layers, board applied vertically, attached to wallboard studs and/or angles with steel screws, 12 in. OC. Horizontal joints staggered 30 in. OC with screws located 1 in. from the joint. When column depth exceeds 36 in. wallboard over web applied horizontally. Screws spaced 12 in. OC alternating between inside and outside flange attachment channels for outer web attachment. Screws spaced 12 in. OC for center web attachment. Joints staggered 12 in. OC with screws located 1 in. from joint.
American Gypsum Co.—Type AG-C.
Boral Gypsum Inc.—Type BG-C.
Canadian Gypsum Company—Types C, IP-X2.
Celotex Corp.—Type FRP.
Continental Gypsum Company—Types CG-C, CGS-5, CGTC-C.
G-P Gypsum Corp.—Type 5.
James Hardie Gypsum Inc.—Type Max"C".
Lafarge Gypsum, A Div. of Lafarge Corp.—Type LGFC-C
Pabco Gypsum Co.—Type PG-C.
Republic Gypsum Co.—Type RG-C.
Standard Gypsum Corp.—Type SG-C.
Temple-Inland Forest Products Corp.—Type TG-C.
United States Gypsum Co.—Types C, IP-X2.
Yeso Panamericano SA de CV—Types C, IP-X2.
10. Screws—Type S self-drilling, self-tapping, bugle head screws. For the first and second wallboard layers over the flanges and the first layer over the web areas, 1 in. long screws are used. For the second wallboard layer over the web areas and the third wallboard layer over the flanges, 1-5/8 in. long screws are used. For the third wallboard layer over the web areas, 2-1/4 in. long screws are used.
11. Corner Bead—No. 28 MSG galv steel, two 1-1/4 in. legs, attached to wallboard with Type 40 gypsum wallboard nails spaced vertically 12 in. OC.
12. Finishing System—Joint compound, 1/16 in. thick, applied over corner beads and joints.
*Bearing the UL Classification Marking

SA&E PROJECT NUMBER	01-615-056
BID PACKAGE	BP-1
ISSUED FOR CONSTRUCTION	10/15/2019

REVISIONS

R #	Doc #	Date

Southern A&E LLC
7951 Troon Circle
Austell, Ga 30168
(770) 819-7777
architects & engineers

© COPYRIGHT 2019 BY SOUTHERN A&E, LLC. ALL RIGHTS RESERVED.
THIS DOCUMENT IS THE PROPERTY OF SOUTHERN A&E, LLC AND SHALL NOT BE COPIED OR REPRODUCED IN WHOLE OR IN PART WITHOUT EXPRESSED WRITTEN CONSENT FROM SOUTHERN A&E, LLC.

FACILITY CODE NUMBER: 674-0110
GYMNASIUM/AUDITORIUM FOR:
HEARD COUNTY SCHOOLS
545 MAIN STREET, FRANKLIN, GA 30217
HEARD COUNTY SCHOOL SYSTEM
FRANKLIN, GEORGIA

UL2

DRAWING NUMBER
A703

ORIGINAL SHEET SIZE: ARCH E1 (30" X 42")

Order Plans @ WWW.LDILine.com