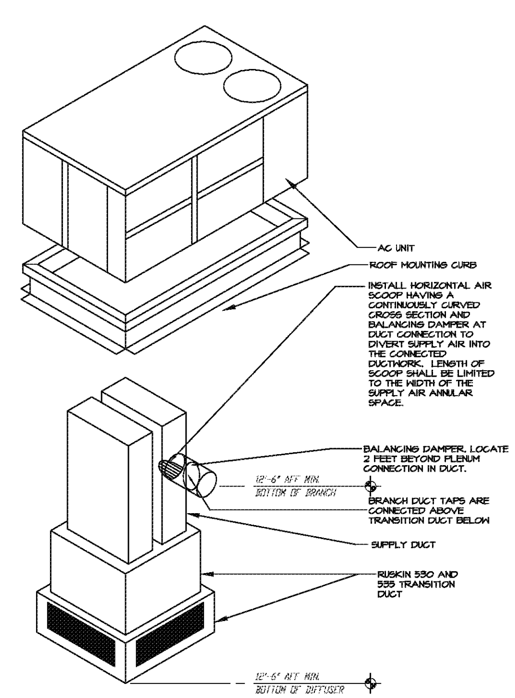

AIRFLOW TO BE DIRECTED AWAY FROM MERCHANDISE/COSTUMERS.

12 CONCENTRIC DIFFUSER DETAIL

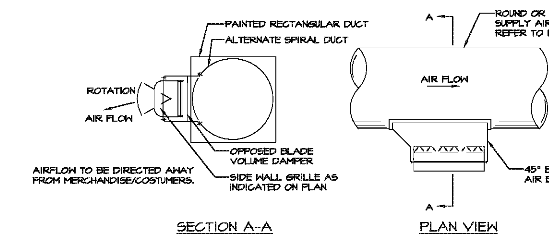

10 DUCT MOUNTED SUPPLY AIR GRILLE DETAIL

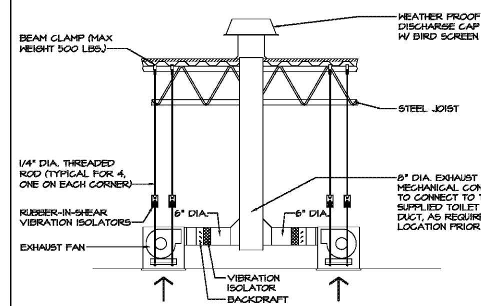

9 TOILET EXHAUST DETAIL

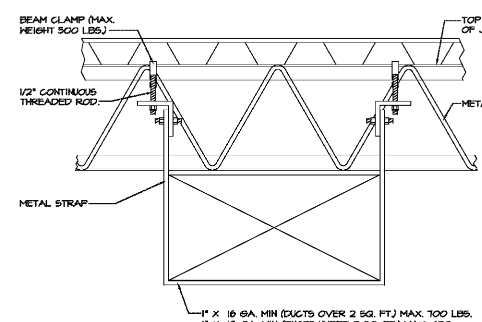

NOTE:
DISTANCE BETWEEN DUCT HANGERS SHALL BE IN ACCORDANCE WITH THE RULES OF THE AGENCIES HAVING JURISDICTION.

DUCTWORK SUPPORT DETAIL
NOT TO SCALE

MAX. SIDE INCHES	RECTANGULAR DUCTS MIN. GALV. SHT. GAUGE	ALUMINUM MIN. B & S GAUGE
THROUGH 12	26 (0.022 IN.)	24 (0.020 IN.)
13 THROUGH 30	24 (0.028 IN.)	22 (0.025 IN.)
31 THROUGH 54	22 (0.034 IN.)	20 (0.032 IN.)
55 THROUGH 84	20 (0.040 IN.)	18 (0.040 IN.)
OVER 84	18 (0.052 IN.)	16 (0.051 IN.)

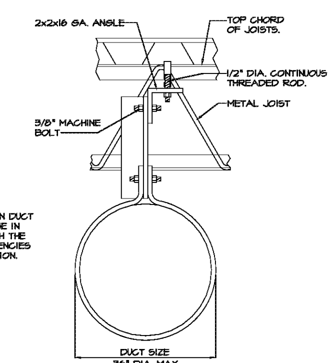

MAX WEIGHT PER FOOT = 16 LBS.

ROUND DUCT SUPPORT DETAIL
NOT TO SCALE

DIAMETER INCHES	SPIRAL SEAM DUCT STEEL MIN. GALV. SHT. GAUGE	ROUND DUCTS LONGITUDINAL SEAM DUCT STEEL MIN. GALV. SHT. GAUGE	FITTINGS STEEL MIN. GALV. SHT. GAUGE
THROUGH 12	28 (0.019 IN.)	26 (0.022 IN.)	26 (0.022 IN.)
13 THROUGH 18	26 (0.022 IN.)	24 (0.028 IN.)	24 (0.028 IN.)
19 THROUGH 28	24 (0.028 IN.)	22 (0.034 IN.)	22 (0.034 IN.)
29 THROUGH 36	22 (0.034 IN.)	20 (0.040 IN.)	20 (0.040 IN.)
37 THROUGH 52	20 (0.040 IN.)	18 (0.052 IN.)	18 (0.052 IN.)

8 DUCT SUPPORT DETAIL

HVAC GENERAL NOTES:

1. CONTRACTOR SHALL PROVIDE ALL LABOR, MATERIALS, TOOLS AND EQUIPMENT TO INSTALL A COMPLETE AND OPERATING HEATING AND COOLING SYSTEM.
2. CONTRACTOR SHALL PROVIDE ALL REQUIRED HVAC PERMITS.
3. THE CONTRACTOR SHALL COMPLY WITH NFPA-90A AND ALL APPLICABLE CODES.
4. ALL HVAC WORK TO BE PERFORMED SHALL BE IN COMPLIANCE WITH ALL STATE AND LOCAL CODES.
5. FLEXIBLE DUCT SHALL COMPLY WITH SMACNA, ALL LOCAL CODES, U.L. RATING, AND NOT EXCEED FIVE FEET IN LENGTH. SHEET METAL DUCT, WHERE REQUIRED BY LOCAL CODES, SHALL BE LINED WITH 1" MATT FACED DUCTLINER IN THE FIRST 10 (TEN) FEET OF THE RETURN AND SUPPLY DUCT STARTING FROM THE HVAC UNIT. AFTER THE FIRST 10 (TEN) FEET THE USE OF 1" DUCT WRAP SHALL BE ACCEPTABLE. WORK MATERIAL TO BE VERIFIED WITH CEILING ASSEMBLY RATING. FIBERGLASS DUCTBOARD DUCTWORK IS ACCEPTABLE, IF LOCAL CODES AND INSPECTION WILL ALLOW IT.
6. THE ELECTRICAL CONTRACTOR SHALL PROVIDE ALL SWITCHES, DISCONNECTS AND CONTROL WIRING.
7. ALL DUCTS SIZES ARE CLEAR INSIDE DIMENSIONS, ALLOW FOR DUCT INSULATION.
8. THE CONTRACTOR SHALL PROVIDE A WRITTEN GUARANTEE THAT SHALL WARRANT ALL WORKMANSHIP AND MATERIALS FOR ONE (1) YEAR FROM THE FINAL WORK ACCEPTANCE BY THE OWNER AND A FIVE YEAR WARRANTY ON THE COMPRESSOR.
9. FILTERS SHALL BE OF THE DISPOSABLE TYPE AND HAVE INITIAL SHARE WEIGHT ARRESTANCE OF 10% AND A CLEAN PRESSURE DROP OF 0.15 W.C., PROVIDE TWO SETS, ONE DURING CONSTRUCTION AND ONE FOR USE AFTER OCCUPANCY.
10. CONTRACTORS SHALL INSTALL AL NECESSARY OFFSETS, BENDS, AND TRANSITIONS REQUIRED TO PROVIDE A COMPLETE SYSTEM AT NO ADDITIONAL COST TO THE OWNER.
11. COORDINATE LOCATION OF ALL CEILING DIFFUSERS, GRILLES AND REGISTERS IN THE FIELD WITH THE ELECTRICIAN TO PREVENT CONFLICT WITH LIGHTS AND ARCHITECTURAL ELEMENTS.
12. ALL WORK OF THIS TRADE SHALL BE COORDINATED WITH ALL OTHER TRADES TO AVOID ANY INTERFERENCES THAT MAY DELAY PROGRESS DURING CONSTRUCTION.
13. THE G.C. MECHANICAL SUB-CONTRACTOR SHALL TEST AND BALANCE TO THE AIR QUANTITIES ON THE PLAN AND PROVIDE A T&B REPORT.
14. CONTRACTOR SHALL INSTALL THERMOSTAT IN ACCORDANCE WITH THERMOSTAT SPEC'S.
15. CONTRACTOR SHALL INSTALL MANUAL BALANCING DAMPERS AT ALL SUPPLY AIR BRANCH DUCTWORK RUN OUTS.
16. CONTRACTOR SHALL INSTALL TURNING VANES AT ALL DUCTWORK TEES AND 90 DEGREE ELBOWS.
17. CONTRACTOR SHALL INSTALL A DUCT-TYPE MOUNTED SMOKE DETECTOR, FOR UNIT SHUTDOWN, IN THE RETURN AIR DUCTWORK PLENUM AT ROOFTOP UNITS. THE CONTRACTOR SHALL VERIFY THE COMPATIBLE TYPE OF DETECTION DEVICE TO USE WITH THE BUILDING OPERATIONS MANAGER.
18. ALL SHEET METAL DUCTWORK SHALL COMPLY WITH SMACNA STANDARDS. ALL DUCTWORK JOINTS SHALL BE TAPED AND SEALED.
19. CONTRACTOR SHALL PROVIDE EQUIPMENT OF THE SCHEDULED CAPACITIES DESIGNED.

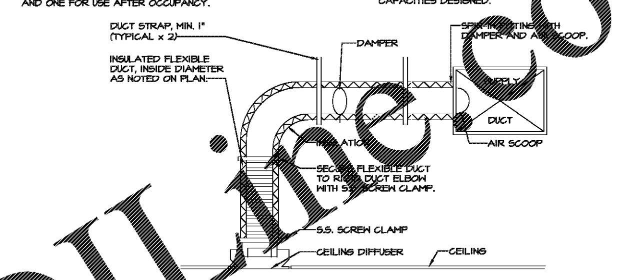

FLEXIBLE DUCT CONNECTION DETAIL
NOT TO SCALE

3 DUCT CONNECTION DETAIL AND NOTES

T.C.G.'S MECHANICAL CONTRACTOR SHALL REMOVE AND DISPOSE OF THE FOLLOWING:

1. THIS CONTRACTOR SHALL REMOVE EXISTING DUCTWORK, DIFFUSERS, REGISTERS AND ALL WORK PERTAINING TO THE EXISTING HVAC SYSTEM.

T.C.G.'S MECHANICAL CONTRACTOR SHALL FURNISH AND INSTALL THE FOLLOWING:

1. THIS CONTRACTOR SHALL FURNISH AND INSTALL NEW ROOFTOP UNITS, TOILET EXHAUST FANS, GAS FIRED UNIT HEATER, DUCTWORK, DIFFUSERS, REGISTERS, HANGERS, PROGRAMMABLE THERMOSTATS AND ALL ITEMS REQUIRED TO PRODUCE A COMPLETE AND OPERABLE HVAC SYSTEM.
2. DUCTWORK: THE MECHANICAL CONTRACTOR IS TO FURNISH AND INSTALL, IN COMPLIANCE WITH THE MOST RECENT SMACNA STANDARDS FOR LOW AND MEDIUM PRESSURE, NEW DUCTWORK, INSULATION, FLEX DUCT, GRILLES, REGISTERS, DIFFUSERS, VOLUME DAMPERS, FIRE DAMPERS, SMOKE DETECTORS, SECONDARY CONDENSATE DRAIN, ETC. NECESSARY TO RENDER THE SYSTEM OPERATIONAL AS DESCRIBED IN THESE PLANS AND SPECIFICATIONS AND AS REQUIRED BY THE T.C.G., LOCAL AND STATE CODES.
3. CONTROL WIRING AND CONTROLS: THE MECHANICAL CONTRACTOR IS TO FURNISH AND INSTALL ALL NECESSARY WIRING (IN CONDUIT IF REQUIRED) AND CONTROLS REQUIRED TO PROVIDE A COMPLETE AND OPERATING SYSTEM. THE MECHANICAL CONTRACTOR SHALL FURNISH AND INSTALL PROGRAMMABLE THERMOSTATS WHERE SHOWN ON THE DRAWINGS.
4. ALL DUCTWORK SHALL BE HUNG AS HIGH AS POSSIBLE TO MAINTAIN ARCHITECTURAL CEILING HEIGHT REQUIREMENTS.
5. ALL UNEXPOSED DUCTWORK SHALL BE INSULATED WITH 2" THICK FIBERGLASS FIRE RETARDANT VAPOR SEAL INSULATION. DUCTWORK WITHIN 10' OF THE UNIT SHALL BE INTERNALLY LINED WITH 1 1/2" ACOUSTICAL INSULATION. DUCT DIMENSIONS ARE NET FREE AREA ONLY. DUCT SIZE MUST ACCOMMODATE INSULATION THICKNESS.
6. FIRE DAMPERS MUST BE INSTALLED AT ALL LOCATIONS WHERE DUCTWORK PENETRATES A FIRE RATED WALL. PROVIDE ACCESS DOORS AS REQUIRED. FIRE DAMPERS TO BE OF THE TYPE APPROVED BY THE AGENCIES HAVING JURISDICTION.
7. WHEN NEW DUCTWORK CONFLICTS WITH EXISTING DUCTWORK, PIPING, ETC., NEW DUCTWORK SHALL BE SET UP OR DOWN AS REQUIRED.
8. PROVIDE SPLITTER OR VOLUME DAMPERS ON ALL NEW SUPPLY AIR DUCT SPLITS AND TAPS AND AIR EXTRACTORS ON ALL SUPPLY AIR REGISTERS.
9. REFER TO ARCHITECTURAL DRAWINGS FOR EXACT LOCATION OF ALL CEILING DIFFUSERS AND REGISTERS.
10. WHEN THE SMOKE DETECTOR, IN RETURN DUCTWORK, ACTIVATES IT SHALL SHUT DOWN THE ROOFTOP UNIT.
11. THE MECHANICAL CONTRACTOR IS TO FURNISH AND INSTALL A CONDENSATE DRAIN SYSTEM PER THE MANUFACTURER'S RECOMMENDATIONS AND THE T.C.G.'S REQUIREMENTS. INTERIOR CONDENSATE DRAIN LINE SHALL BE INSULATED WITH 1/2" THICK ARMAFLEX.
12. THIS CONTRACTOR IS TO HIRE T.C.G.'S SPECIFIED CONTRACTOR FOR ALL ROOF PENETRATIONS.
13. THE MECHANICAL CONTRACTOR, AS PART OF THIS WORK, IS TO STENCIL THE TENANT NAME AND SPACE NUMBER ON ALL ROOFTOP EQUIPMENT WITH 4" HIGH BLOCK LETTERS (2" HIGH BLOCK LETTERS ON ALL SMALL EQUIPMENT WHERE 4" WILL NOT FIT) IN A COLOR APPROVED BY THE BUILDING MANAGER / CONSTRUCTION INDIVIDUAL.
14. IF STRUCTURAL DRAWINGS FOR HVAC EQUIPMENT SUPPORTS ARE NOT ALREADY INCORPORATED INTO THIS SET OF PLANS AND SPECIFICATIONS, THE MECHANICAL CONTRACTOR, AT THEIR OWN COST AND EXPENSE, AND AS PART OF THE BID TO THE G.C., IS TO HIRE A STRUCTURAL ENGINEER TO DESIGN THE SUPPORTS FOR THE NEW HVAC UNIT AND A STRUCTURAL SUBCONTRACTOR TO FURNISH AND INSTALL SUCH HANGERS / SUPPORTS, COLUMNS, BEAMS, BRACING, ETC. TO HANG FROM THE STRUCTURAL AND / OR SUPPORT AT THE ROOF TOP FOR ALL NEW HVAC EQUIPMENT. G.C. TO SUBMIT AS REQUIRED ALL STRUCTURAL SHOP DRAWINGS TO THE T.C.G.'S ARCHITECT, AS REQUIRED, FOR APPROVAL, PRIOR TO STARTING WORK.

5-8-07

11 WORK RESPONSIBILITY

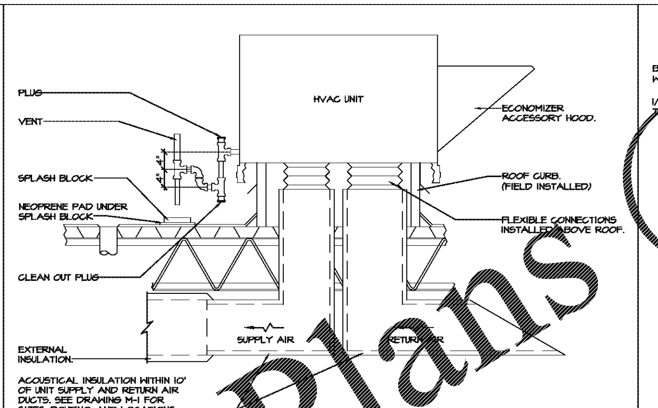

7 ROOFTOP UNIT DETAIL

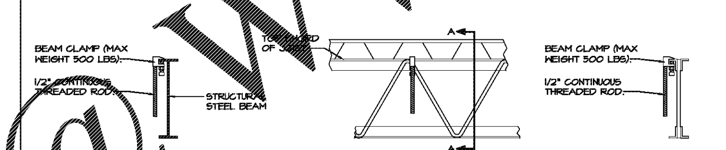

STEEL BEAM ATTACHMENT DETAIL
NOT TO SCALE

OPEN WEB STEEL JOIST ATTACHMENT DETAIL
NOT TO SCALE

SECTION A-A
NOT TO SCALE

5 ATTACHMENT TO STRUCTURE DETAIL

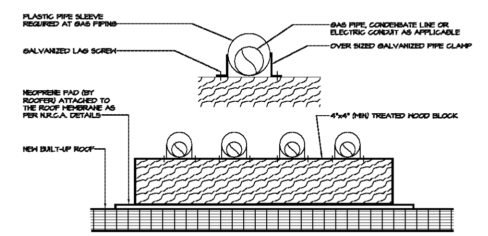

NOTES: BLOCK SUPPORT MUST BE PLACED AT EACH ELBOW, TEE, UNION, ETC. DO NOT INSTALL CLAMPS AT TEES AND ELBOWS. BLOCK SUPPORT SPACING SHALL NOT EXCEED THE FOLLOWING:

1/2" & SMALLER PIPE	6'-0" C/C
3/4" TO 1" PIPE	8'-0" C/C
1 1/4" & LARGER PIPE	10'-0" C/C

WHERE PIPES ARE SUPPORTED AT HIGHER ELEVATIONS TO REACH ANOTHER ROOF LEVEL, STACK WOOD BLOCKS AND FASTEN TOGETHER WITH LAG SCREWS TO PROVIDE A RIGID AND STABLE SUPPORT.

CONTRACTOR TO PAINT ALL GAS PIPING PER STATE AND LOCAL CODES.

ROOF PIPING SUPPORT DETAIL

2 ROOF PIPING SUPPORT DETAIL

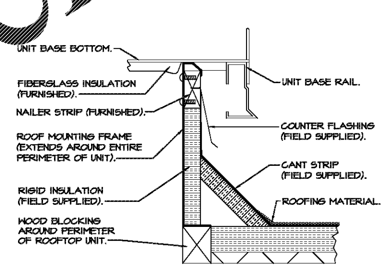

NOTE:
WHERE ROOFTOP UNITS ARE REQUIRED TO BE REPLACED OR RELOCATED, COORDINATE ROOF OPENINGS WITH THE T.C.G.. ALL ROOF OPENINGS TO BE BY T.C.G. APPROVED CONTRACTOR AT THIS CONTRACTOR'S EXPENSE. PROVIDE SIGNED AND SEALED DRAWINGS BY A STRUCTURAL ENGINEER AS REQUIRED FOR ANY ADDITIONAL STEEL OR MODIFICATIONS TO EXISTING STEEL. OBTAIN T.C.G. AND BUILDING DEPARTMENT APPROVALS AS REQUIRED.

6 ROOF CURB DETAIL

TYPICAL FLASHING DETAIL FOR ROOF CURBS WITH 140 MPH WIND LOADS

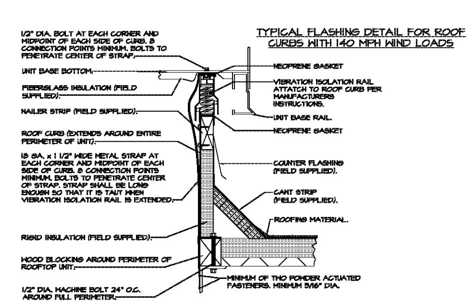

NOTE:
WHERE ROOFTOP UNITS ARE REQUIRED TO BE REPLACED OR RELOCATED, COORDINATE ROOF OPENINGS WITH THE T.C.G.. ALL ROOF OPENINGS TO BE BY T.C.G. APPROVED CONTRACTOR AT THIS CONTRACTOR'S EXPENSE. PROVIDE SIGNED AND SEALED DRAWINGS BY A STRUCTURAL ENGINEER AS REQUIRED FOR ANY ADDITIONAL STEEL OR MODIFICATIONS TO EXISTING STEEL. OBTAIN T.C.G. AND BUILDING DEPARTMENT APPROVALS AS REQUIRED.

NOT TO SCALE

4 TYPICAL FLASHING DETAIL

1 NOT USED

Order Plans @ WWW.LDIILine.com

MICHAEL J GOLLINS
Digitally signed by MICHAEL J GOLLINS
DN: c=US, o=IdenTrust ACES Unaffiliated Individual, cn=MICHAEL J GOLLINS, 0.9.2342.19200300.100.1.1=A01098000000161 2E7140E600006A95
Date: 2019.09.27 10:18:52 -05'00'

ENGINEER

MICHAEL J. GOLLINS LICENSE No 63790 STATE OF FLORIDA PROFESSIONAL ENGINEER
09.18.19 Date:
2.28.21 Expires:
Professional Certification.
I certify that these documents were prepared or approved by me, and that I am a duly licensed professional engineer under the laws of the State of Florida, license number 63790, expiration date February 28, 2021.

ARCHITECTURAL SEAL

DATE ISSUE

	DATE	REVISION	NAME
	09/18/19	PERMIT / OWNER	

PROJECT NAME / LOCATION

five BELOW
NORTH LAKELAND
919 LAKELAND PARK CENTER DRIVE
LAKELAND, FL 33809

PROJECT INFORMATION

DATE: SEPTEMBER 18, 2019
PROJECT NO. 190636
DELIVERY TYPE: AS-IS

DRAWN:
CHECKED:

SHEET TITLE / NUMBER

MECHANICAL DETAILS

M2.0