ABBREVIATIONS

Abbreviation	Meaning
A	
@	AT
&	AND
AB	ANCHOR BOLT
ACOUST	ACOUSTICAL
A/C	AIR CONDITIONING
ACT	ACOUSTICAL CEILING TILE
AD	AREA DRAIN
AFF	ABOVE FINISHED FLOOR
AHU	AIR HANDLING UNIT
ALT	ALTERNATE
ALUM	ALUMINUM
APPROX	APPROXIMATE
ARCH	ARCHITECTURAL
AV	AUDIO VISUAL
AVG	AVERAGE
B	
BD	BOARD
BEJ	BRICK EXPANSION JOINT
BLDG	BUILDING
BLKG	BLOCKING
BOT	BOTTOM
BO	BOTTOM OF
BRG	BEARING
BRK	BRICK
BSMT	BASEMENT
BUR	BUILT-UP ROOF
C	
CAB	CABINET
CB	CATCH BASIN
CFM	CUBIC FEET PER MINUTE
CF	CUBIC FEET
CFMF	COLD-FORMED METAL FRAMING
CJ	CONTROL JOINT
CL	CENTERLINE
CLG	CEILING
CLOS	CLOSET
CM	CENTIMETER
CMU	CONCRETE MASONRY UNIT
CO	CLEAR OPENING, CLEAN OUT
COL	COLUMN
CONC	CONCRETE
CONF	CONFERENCE
CONST	CONSTRUCTION
CONT	CONTINUOUS
CORR	CORRIDOR
CPT	CARPET
CT	CERAMIC TILE
CW	CHILLER WATER
CY	CUBIC YARD
D	
D	DEEP
DBL	DOUBLE
DET	DETAIL
DF	DRINKING FOUNTAIN
DIA	DIAMETER
DIAG	DIAGONAL
DIM	DIMENSION
DN	DOWN
DR	DOOR
DS	DOWNSPOUT
DWG(S)	DRAWING(S)
E	
E	EAST
EA	EACH
EF	EACH FACE
EIFS	EXTERIOR INSULATION FINISH SYSTEM
EJ	EXPANSION JOINT
ELEC	ELECTRICAL
EL	ELEVATION
ELEV	ELEVATION
EQUIP	EQUIPMENT
EQ	EQUAL
EW	EYE WASH, EACH WAY
EWC	ELECTRIC WATER COOLER
EWH	ELECTRIC WATER HEATER
EXIST	EXISTING
EXP	EXPANSION, EXPOSED
EXT	EXTERIOR
F	
FA	FIRE ALARM
FB	FACE BRICK
FD	FLOOR DRAIN
FE	FIRE EXTINGUISHER IN CABINET
FEX	FIRE EXTINGUISHER ON BRACKET
FF	FINISHED FLOOR
FFE	FINISHED FLOOR ELEVATION
FH	FIRE HYDRANT
FHC	FIRE HOSE CABINET
FIN	FINISH
F (CONT.)	
FL	FLOOR, FLOORING
FO	FACE OF
FOC	FACE OF CONCRETE
FOM	FACE OF MASONRY
FOS	FACE OF STUDS
FP	FIREPROOF
FR	FIRE RATED
FRP	FIBERGLASS REINFORCED PLASTIC
FRT	FIRE RETARDANT TREATED
FS	FULL SIZE
FT	FOOT, FEET
FTG	FOOTING
FURN	FURNISH
FUT	FUTURE
FV	FIELD VERIFY
G	
G	GAS
GA	GAGE
GALV	GALVANIZED
GB	GRAB BAR
GC	GENERAL CONTRACTOR
GCMU	GLAZED CONCRETE MASONRY UNIT
GD	GRADE
GFRC	GLASS FIBER REINFORCED CONCRETE
GFRG	GLASS FIBER REINFORCED GYPSUM
GL	GLASS
GYP	GYPSUM
GWB	GYPSUM WALL BOARD
H	
HB	HOSE BIB
HC	HANDICAPPED, HOLLOW CORE
HD	HAND
HDR	HEADER
HDWD	HARDWOOD
HDW	HARDWARE
HK	HOOK(S)
HM	HOLLOW METAL
HORIZ	HORIZONTAL
HP	HIGH POINT, HORSE POWER
HR	HOUR
HS	HEAT STRENGTHENED
HT	HEIGHT
HVAC	HEATING VENTILATING AIR CONDITIONING
HW	HOT WATER
I	
ID	INSIDE DIAMETER
INSUL	INSULATION
INT	INTERIOR
INV	INVERT
J	
JAN	JANITOR
JC	JANITOR CLOSET
JST	JOIST
JT	JOINT
K	
KD	KNOCKDOWN
KG	KILOGRAM
KIT	KITCHEN
KO	KNOCKOUT, KNEE OPENING
KS	KNEE SPACE
L	
L	LONG, LENGTH
LAB	LABORATORY
LAV	LAVATORY
LB	LOAD BEARING
LBS	POUNDS
LEV	LEVEL
LH	LEFT HAND
LHR	LEFT HAND REVERSE
LIN	LINOLEUM
LLH	LONG LEG HORIZONTAL
LLV	LONG LEG VERTICAL
LP	LOW POINT
LT	LIGHT
LTL	LINTEL
LVR	LOUVER
LW	LIGHTWEIGHT
M	
M	METER
MAINT	MAINTENANCE
MAX	MAXIMUM
MDF	MEDIUM DENSITY FIBERBOARD
MDO	MEDIUM DENSITY OVERLAY
MECH	MECHANICAL
MET	METAL
MEZZ	MEZZANINE
MFR	MANUFACTURER
MFG	MANUFACTURING
M (CONT.)	
MH	MANHOLE
MIN	MINIMUM
MIR	MIRROR
MISC	MISCELLANEOUS
MM	MILLIMETER
MNT	MOUNT
MO	MASONRY OPENING
MTG	MOUNTING
MTL	METAL
MULL	MULLION
N	
N	NORTH
NE	NORTHEAST
NIC	NOT IN CONTRACT
NO	NUMBER
NOM	NOMINAL
NPS	NOMINAL PIPE SIZE
NTS	NOT TO SCALE
NW	NORTHWEST
O	
OA	OVERALL
OC	ON CENTER
OD	OUTSIDE DIAMETER
OFF	OFFICE
OFCI	OWNER FURNISHED CONTRACTOR INSTALLED
OFOI	OWNER FURNISHED OWNER INSTALLED
OH	OVERHEAD, OPPOSITE HAND
OPNG	OPENING
OPP	OPPOSITE
OTO	OUT-TO-OUT
P	
PBD	PARTICLE BOARD
PC	PRECAST
PERF	PERFORATED
PNT(D)	PAINT(ED)
PL	PLATE, PROPERTY LINE
PLAM	PLASTIC LAMINATE
PLAS	PLASTER
PLBG	PLUMBING
PLWD	PLYWOOD
PLYWD	PLYWOOD
PNL	PANEL
POL	POLISHED
PR	PAIR
PSF	POUNDS PER SQUARE FOOT
PSI	POUNDS PER SQUARE INCH
PT	PRESSURE TREATED
PTN	PARTITION
PVC	POLYVINYL CHLORIDE
PVG	PAVING
PWD	PLYWOOD
Q	
QT	QUARRY TILE
R	
R	RADIUS, RISER
R/A	RETURN AIR
RB	RESILIENT BASE
RD	ROOF DRAIN
REF	REFERENCE
REINF	REINFORCED, REINFORCING
REQ'D	REQUIRED
RES	RESILIENT
REV	REVISION
RH	RIGHT HAND
RHR	RIGHT HAND REVERSE
RL	RAIN LEADER
RM	ROOM
RTU	ROOFTOP UNIT
RUB	RUBBER
ROW	RIGHT OF WAY
S	
S	SOUTH
SE	SOUTHEAST
S/A	SUPPLY AIR
SCHED	SCHEDULE
SECT	SECTION
SIM	SIMILAR
SF	SQUARE FOOT
SPECS	SPECIFICATIONS
SS	SERVICE SINK
SST	STAINLESS STEEL
STD	STANDARD
STL	STEEL
STND	STAINED
STOR	STORAGE
STRUCT	STRUCTURAL
SUSP	SUSPENDED
S/CONC	SEALED CONCRETE
S (CONT.)	
SQ	SQUARE
SW	SOUTHWEST
SYM	SYMMETRICAL
SYS	SYSTEM
T	
T	TREAD
T&B	TOP AND BOTTOM
T&G	TONGUE AND GROOVE
TC	TOP OF CURB
TEL	TELEPHONE
TEMP	TEMPORARY
THK	THICK, THICKNESS
TO	TOP OF
TOC	TOP OF CONCRETE
TOS	TOP OF STEEL
TOW	TOP OF WALL
TS	TRANSPARENT
TYP	TYPICAL
U	
UC	UNDERCUT
UH	UNIT HEATER
UNFIN	UNFINISHED
UNO	UNLESS NOTED OTHERWISE
UTIL	UTILITY
V	
VB	VAPOR BARRIER
VCT	VINYL COMPOSITION TILE
VERT	VERTICAL
VIF	VERIFY IN FIELD
VTR	VENT THROUGH ROOF
VWC	VINYL WALL COVERING
W	
W	WIDTH, WEST
W/	WITH
W/O	WITHOUT
WC	WATER CLOSET, WALL COVERING
WD	WOOD
WGL	WIRE GLASS
WH	WATER HEATER
WP	WATERPROOFING
WT	WEIGHT
WWM	WELDED WIRE MESH

SYMBOLS

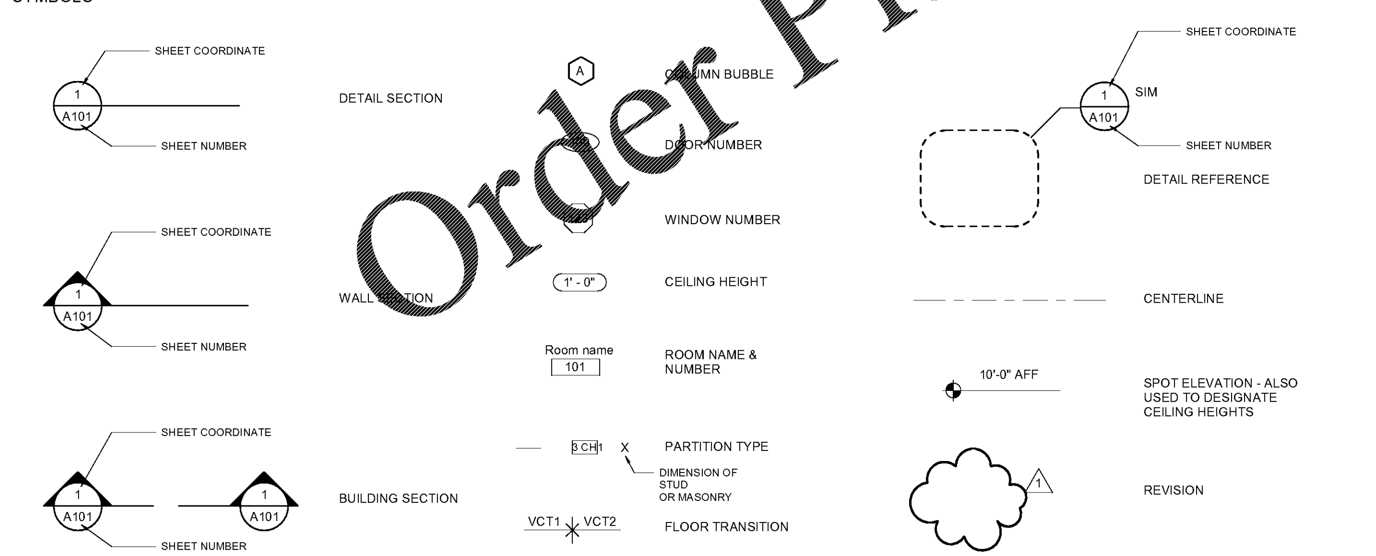

PARTITION TYPES

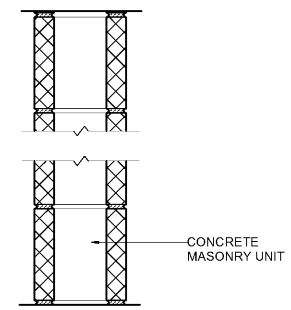

x M 49

x M 43 — **INTERIOR PARTITION CONCRETE MASONRY UNIT PARTITION**

MARK	DESCRIPTION
0 M 43	NO RATING; CONCRETE MASONRY PARTITION, 8" CMU
0 M 43 4	NO RATING; CONCRETE MASONRY PARTITION, 4" CMU
1 M 49	1-HR FIRE RATING; PARTITION PER UL DESIGN U905
2 M 49	2-HR FIRE RATING; PARTITIONPER UL DESIGN U905

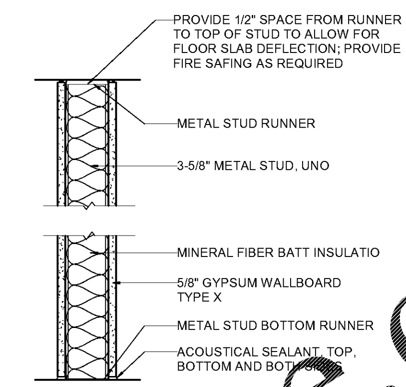

x S 49 G — **INTERIOR PARTITION METAL STUD GYPSUM PANEL NO SOUND ATTENUATION**

MARK	DESCRIPTION
0 S 49 G	NO RATING; PARTITION PER UL DESIGN U465
1 S 49 G	1HR FIRE RATING; PARTITION PER UL DESIGN U465

PARTITION TYPES LEGEND

A. ON FLOOR PLANS, PARTITION TYPES ARE INDICATED USING TAGS COMPOSED GENERALLY AS FOLLOWS (SEE INDIVIDUAL DESCRIPTIONS IN PARTITION TYPE DETAILS FOR SPECIFIC REQUIREMENTS).

B. **FIRST POSITION:** FIRE RATING
1. ZERO, 1, 2, 3, OR 4 HOURS.

C. **SECOND POSITION:** CONSTRUCTION MATERIAL.
1. EXTEND ALL PARTITIONS AND MATERIALS FROM FLOOR TO OVERHEAD SOLID STRUCTURE UNLESS OTHERWISE INDICATED.
2. PROVIDE PER THE DRAWING TAG:
   - **A** METAL STUDS AND GYPSUM PANELS FROM FLOOR TO 6" ABOVE CEILING
   - **D** PARTIAL HEIGHT ROOM DIVIDER
   - **F** FURRING: HAT-SHAPED CHANNELS
   - **M** MASONRY (CMU TYPICAL)
   - **SA** METAL STUDS TO STRUCTURE, GYPSUM PANELS FROM FLOOR TO 6" ABOVE CEILING
   - **S** METAL STUDS AND GYPSUM PANELS
   - **U** STEEL STUDS AND GYPSUM BOARD FROM FLOOR TO UNDERSIDE OF CEILING

D. **THIRD POSITION:** INDICATES CONSTRUCTION FEATURES AS DESCRIBED UNDER INDIVIDUAL DESCRIPTIONS IN PARTITION TYPE DETAIL

E. **FOURTH POSITION:**
   - **G** GYPSUM PANELS

F. **FINAL POSITION**, OUTSIDE OF BOX ON DRAWINGS:
1. DIMENSION OF STUD OR MASONRY MEASURED TO FINISH FACE.
2. WHERE NO DIMENSION IS INDICATED ADJACENT TO BOX, PROVIDE:
   - 3-5/8" METAL STUDS
   - 8" NOMINAL CMU BLOCK

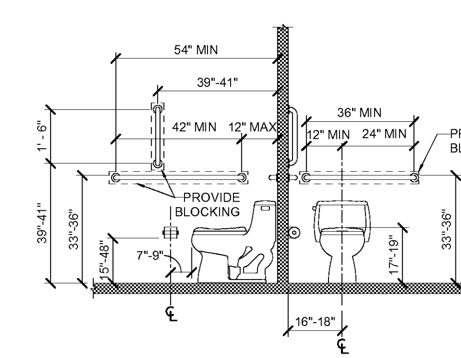

WHEELCHAIR ACCESSIBLE WATER CLOSET CLEARANCES (ELEVATIONS)

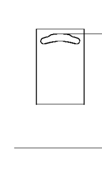

SEAT COVER DISPENSER

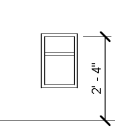

SANITARY NAPKIN DISPOSAL

A8 MOUNTING HEIGHTS - RESTROOMS

GENERAL PROJECT NOTES

DIMENSIONING
1. DIMENSIONS ON PLANS ARE TO FACE OF CMU OR FACE OF GWB UNLESS NOTED OTHERWISE.
2. MASONRY DIMENSIONS SHOWN ARE ACTUAL DIMENSIONS.
3. DO NOT SCALE DRAWINGS. USE DIMENSIONS ONLY.
4. DIMENSIONS RELATED TO THE EXISTING BUILDING SHALL BE VERIFIED PRIOR TO CONSTRUCTION.
5. EXTERIOR DIMENSIONS ARE GIVEN TYPICALLY TO THE OUTSIDE FACE OF GLAZING, MASONRY OR EIFS.

PARTITIONS/FINISHES/GENERAL
1. SEE LIFE SAFETY PLANS, FLOOR PLANS & PARTITION TYPES FOR LOCATION OF FIRE RATED WALLS.
2. PROVIDE CONTINUOUS HORIZONTAL BLOCKING IN ALL PARTITIONS WHERE INDICATED AND WHERE REQUIRED FOR EQUIPMENT AND CASEWORK ATTACHMENT.
3. ALL INTERIOR WOOD BLOCKING SHALL BE FIRE RETARDANT TREATED.
4. IN GENERAL, THERE SHALL BE NO BACK-TO-BACK ELECTRICAL, TELEPHONE OR OTHER OUTLETS. OUTLET HOLES SHALL BE PACKED WITH ACOUSTICAL SEALANT.
5. WHEN OUTLETS ARE INDICATED AS OCCURRING BACK-TO-BACK THEY SHOULD BE SEPARATED BY 16 INCHES HORIZONTALLY.
6. WHERE DIMENSIONS ARE SHOWN WHICH CONFLICT WITH THIS, OBTAIN DIRECTION FROM ARCHITECT.
7. PROVIDE A SEALANT JOINT AT ALL INTERSECTIONS OF GWB WALLS OR GWB CEILINGS WITH CMU PARTITIONS.
8. MAINTAIN INTEGRITY OF ALL RATED PARTITIONS AT INSTALLATION OF RECESSED FIRE EXTINGUISHER CABINETS, CABINETS, TOWEL DISPENSERS, RECEPTACLES, ELECTRICAL PANELS AND OTHER RECESSED ITEMS. AT GWB WALLS, OBTAIN THIS INTEGRITY BY INSTALLING AN ADDITIONAL LAYER OF GYPSUM BOARD WITHIN WALL AROUND ALL SIDES OF ITEM AND AN ADDITIONAL LAYER BEHIND ITEM.
9. WHERE HVAC OR OTHER MECHANICAL, ELECTRICAL AND PLUMBING ITEMS PENETRATE PARTITIONS, STUDS SHALL BE BRACED AND FRAMED TO STRUCTURE AS REQUIRED TO PROVIDE ADEQUATE SUPPORT.
10. ALL PENETRATIONS THROUGH WALLS SHALL BE SEALED TO PROVIDE FIRE, SMOKE AND/OR ACOUSTIC ISOLATION SPACES.
11. BEFORE PATCHING ANY FIRE-RATED CMU PARTITION, FILL ANY EXPOSED CELLS SOLID WITH GROUT.
12. PROVIDE FINISHED WALL UNDER AND BEHIND WALL EQUIPMENT AND CASEWORK.

COORDINATION/INDICATION OF ENGINEERING WORK ON ARCHITECTURAL DRAWINGS:
1. WORK OF ENGINEERING DISCIPLINES IS SHOWN ON ARCHITECTURAL DRAWINGS FOR COORDINATION AND CONVENIENCE PURPOSES ONLY. REFER TO APPROPRIATE DISCIPLINE DRAWINGS FOR COMPLETE AND GOVERNING INFORMATION REGARDING THEIR WORK.
2. SEE ARCHITECTURAL REFLECTED CEILING PLANS FOR LOCATION OF CEILING MOUNTED MECHANICAL, ELECTRICAL AND PLUMBING FIXTURES.
3. WHERE EXPOSED STRUCTURE CEILING AREAS OCCUR IN ARCHITECTURAL REFLECTED CEILING PLANS, FULL DELINEATION OF STRUCTURAL, MECHANICAL, ELECTRICAL, PLUMBING, AND FIRE PROTECTION SYSTEMS IS NOT PROVIDED, SELECTED ELEMENTS AND DEVICES MAY BE SHOWN FOR LOCATION OR COORDINATION (E.G. LIGHT AND SPRINKLER SPACING)

LORD AECK SARGENT
A KATERRA COMPANY
LordAeckSargent.com

© 2018 Lord Aeck Sargent
Unless otherwise agreed to in writing,this document is the sole property of Lord Aeck Sargent and is to be returned upon demand. The information herein is confidential and may not be used nor divulged without the written permission of Lord Aeck Sargent

REVISION:

LORD AECK SARGENT, A KATERRA COMPANY PLLC — REGISTERED ARCHITECTURAL CORPORATION — CERT. NO. 53391 — NORTH CAROLINA — CHAPEL HILL

SHEET TITLE: PARTITION TYPE / SYMBOLS / LEGEND / GENERAL NOTES

SCALE (U.N.O.)

UNC SCHOOL OF MEDICINE
NEUROSCIENCES RESEARCH BUILDING
SCO PROJECT ID: 11-09861-02G
7th & 8th FLOORS FOR DERMATOLOGY

LOCATION
115 Mason Farm Road, Campus Box 7250
Chapel Hill, North Carolina 27599-7250

SEAL: Lauren Dunn Rockart — Registered Architect — 9674 — North Carolina — Chapel Hill, NC — 09/25/2019

ISSUE DATE: 09/25/2019

JOB. NO.: 10761-00

DWG. NO.: A001

BID SET

C:\LAS_CADD\Central_10761-60_v18_ccarbrey.rvt
9/29/2019 7:29:00 PM

Order Plans @ WWW.LDILine.com