GENERAL ROOFING NOTES:

1. ROOFING SUBCONTRACTOR TO COORDINATE LOCATION OF H.V.A.C. UNITS AND ROOF TOP ACCESSORIES WITH STRUCTURAL, MECHANICAL AND ELECTRICAL DRAWINGS FOR PLACEMENT AND TAPERED RIGID INSULATION BOARD LAY-OUT AND SUBSEQUENT INSTALLATION IN ORDER TO AVOID PONDING WATER CONDITIONS ATTRIBUTABLE TO BOARD LAY-OUT ISSUES.
2. ROOF SYSTEMS SPECIFIED SHALL BE APPLIED ONLY BY MANUFACTURER APPROVED APPLICATOR IN ORDER TO MEET GUARANTEE REQUIREMENTS.
3. COORDINATE LOCATION OF MECHANICAL UNITS WITH STRUCTURAL AND MECHANICAL DRAWINGS.
4. HVAC CONDENSATE LINES TO TERMINATE AT ROOF DRAIN OR AS REQUIRED BY LOCAL CODE.
5. REFER TO STRUCTURAL AND M-E-P DRAWINGS FOR ADDITIONAL INFORMATION.
6. ALL CURBS AND PIPE PENETRATIONS SHALL HAVE A MINIMUM OF 16" CLEAR FROM EACH OTHER FOR ROOF FLASHING PURPOSES. ALL EQUIPMENT SHALL HAVE A MINIMUM OF 16" CLEAR FROM ALL ADJACENT PARAPETS. ALL HVAC MOUNTED EQUIPMENT (DISCONNECT BOXES, GFCI, PIPE SUPPORTS) SHALL NOT BE CLOSER THAN 16" FROM EACH OTHER OR CURB. NO UNISTRUT PIPE SUPPORTS SHALL BE USED AS VERTICAL MEMBERS FOR MOUNTING EQUIPMENT TO ROOF SURFACE.
7. PONDING WATER IS DEFINED AS WATER THAT DOES NOT DRAIN OR DISSIPATE FROM THE ROOF WITHIN 48 HOURS AFTER PRECIPITATION.
8. CONTRACTOR SHALL "SUGAR-IN" ALL ASPHALT. BLEED-OUT ON PLIES WITH ADDITIONAL GRANULES TO MATCH EXISTING COLORATION OF THE MINERAL SURFACE CAP SHEET.
9. ALL FLASHING CEMENTS, ASPHALTS, PRODUCTS AND ACCESSORIES SHALL BE APPROVED BY ROOFING MANUFACTURER WITH THE MANUFACTURES'S BRAND. ALL ASPHALTS SHALL BE AMERICAN MANUFACTURED PRODUCTS.

GENERAL NOTES:

A. THE ROOF STRUCTURE SHALL NOT BE USED FOR STOCKPILING OF EQUIPMENT OR MATERIALS UNLESS APPROVED BY THE ARCHITECT, STRUCTURAL ENGINEER AND THE JOIST MANUFACTURER.
B. THE ROOFING SYSTEM SHALL BE AS PER DRAWINGS AND PER MANUFACTURERS SPECIFICATIONS.
C. COORDINATE ROOF ELEVATIONS WITH STRUCTURAL DRAWINGS. REFER TO SPECIFICATION SHEET FOR ROOF RELATED ITEMS, INCLUDING GUARANTEES, CURBS, FLASHING, ETC.

KEYED NOTES:

1. WHITE, SINGLE PLY, PVC 50 MIL, MECHANICALLY FASTENED ROOF MEMBRANE BY DURO-LAST. PROVIDE 20 YEAR WARRANTY. REFERENCE DETAIL #5, THIS SHEET.
2. ROOF ACCESS SCUTTLE, REFERENCE DETAIL #10, THIS SHEET.
3. PREFABRICATED METAL CANOPY. REFERENCE SHEET A-7.3
4. VENT THROUGH ROOF - PROVIDE PREFABRICATED DURO-LAST VENT FLASHING FOR ALL VENTS AND PIPE PENETRATIONS. REFERENCE DETAIL #7, THIS SHEET.
5. ROOF CRICKET WITH SLOPE EQUAL TO ROOF, REFER TO DETAIL #3, THIS SHEET.
6. ROOF OVERFLOW SCUPPER - REFER TO DETAIL #4, THIS SHEET.
7. ROOFTOP AIR CONDITIONING UNIT - REFER TO MECHANICAL PLANS.
8. EXHAUST FAN - REFER TO MECHANICAL PLANS
9. ILLUMINATED PARAPET LIGHT BAND.
10. METAL COPING.
11. G.C. TO PROVIDE SLOPED KICKER AS SHOWN. SEE SECTIONS. NOTE: PROVIDE 2x6 BLOCKING AT 16" O.C. BETWEEN TRUSSES WITH SIMPSON JOIST HANGER AT EACH END IF KICKERS ARE PARALLEL TO TRUSSES.
12. PVC CONDENSATE DRAIN (SIZE AS SHOWN) WITH PIPE SUPPORTS EVERY 5'-0". TERMINATE CONDENSATE DRAIN AT PRIMARY SCUPPER. REFER TO DETAIL #8, THIS SHEET FOR ADDITIONAL INFORMATION.
13. ROOF DRAINS - SEE DETAIL #2 THIS SHEET - INSTALL SURROUNDING 4'x4' TAPERED PERLITE SUMP @ EACH DRAIN (1" THICKNESS) INSTALLED OVER ISOCYANURATE INSULATION BASE LAYER. SEE P-4 FOR MORE INFORMATION.
14. EQUIPMENT STAND FOR WALK-IN BOX COOLER/FREEZER CONDENSERS AND ICE MACHINE CONDENSER. REFER TO EQUIPMENT STAND DETAIL, THIS SHEET.
15. PROVIDE PITCH PAN WITH CONDUIT OVER OFFICE FOR SATELLITE DISH/ANTENNA.

NOTE:
1. EXHAUST FANS 1 & 2 TO DISCHARGE 40" ABOVE FINISHED ROOF.
2. PROVIDE & INSTALL "GREASE GUARDS" FOR EF-1 AND EF-2.
3. NO AC FRESH AIR INTAKE TO BE WITHIN 10'-0" OF ANY EXHAUST FANS.

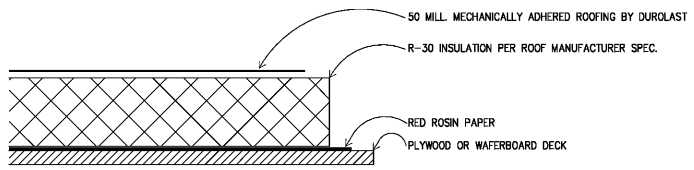

STANDARD ROOFING SECTION (1)
SCALE: 3" = 1'-0"

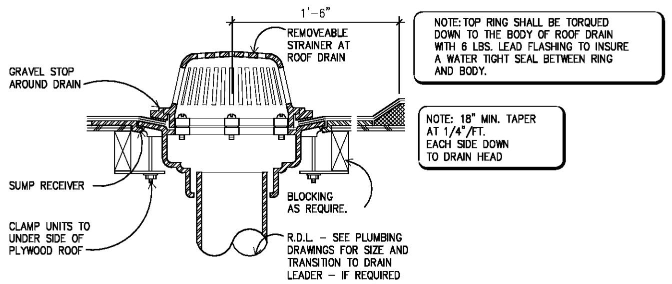

ROOF DRAIN DETAIL (2)
SCALE: 3/4" = 1'-0"

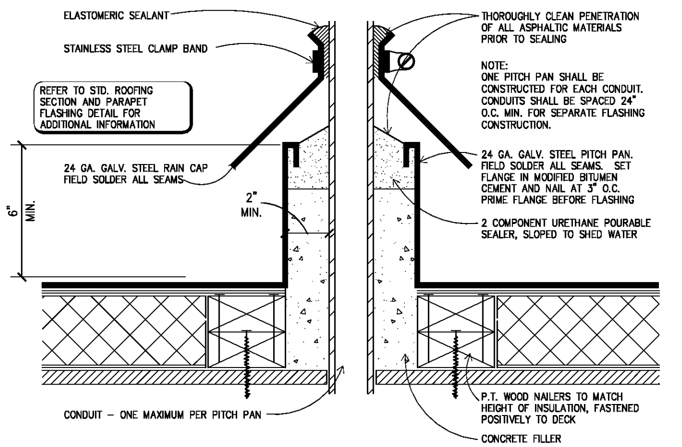

PITCH PAN DETAIL (6)
SCALE: 3" = 1'-0"

NOTE
ALL ROOFING DETAILS TO BE VERIFIED AND COORDINATED WITH MANUFACTURERS SPECIFICATIONS AND WARRANTIES.

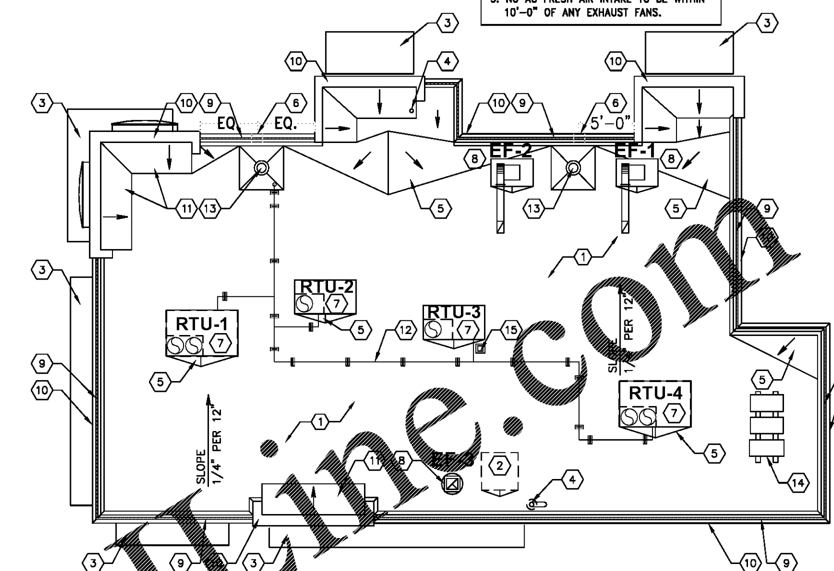

(1) ROOF PLAN
SCALE: 1/8" = 1'-0"

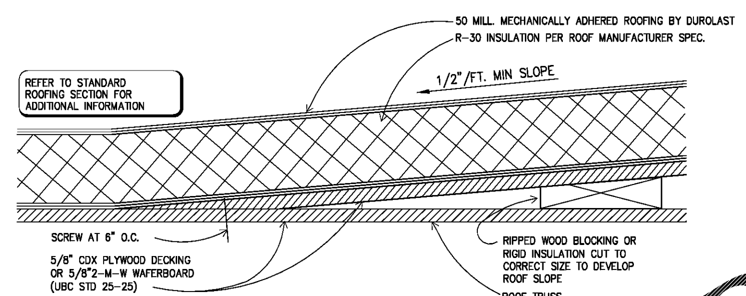

TYPICAL CRICKET DETAIL (3)
SCALE: 3" = 1'-0"

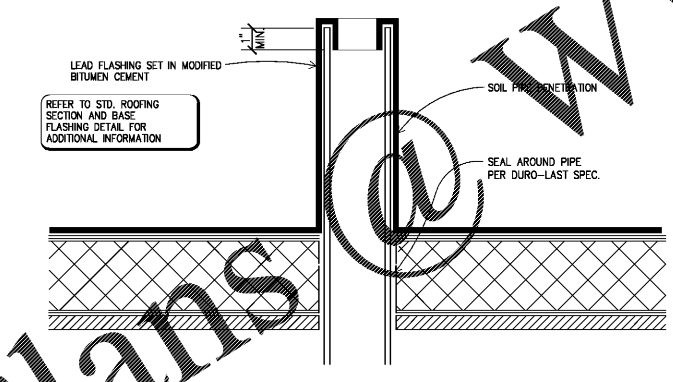

TYP. SOIL PIPE FLASHING DETAIL (7)
SCALE: 3" = 1'-0"

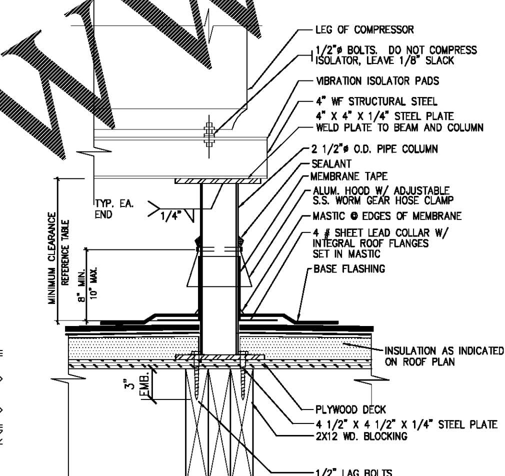

EQUIPMENT STAND DETAIL (9)
SCALE: NONE
VERIFY W/ EQUIPMENT SUPPLIER IF IN CONTRACT.

CLEARANCE BELOW RAISED ROOF MOUNTED MECHANICAL UNITS (INCHES)	
WIDTH OF UNIT	MINIMUM CLEARANCE ABOVE ROOF SURFACE
< 24	14
24 < 36	18
36 < 48	24
48 < 60	30
> 60	48

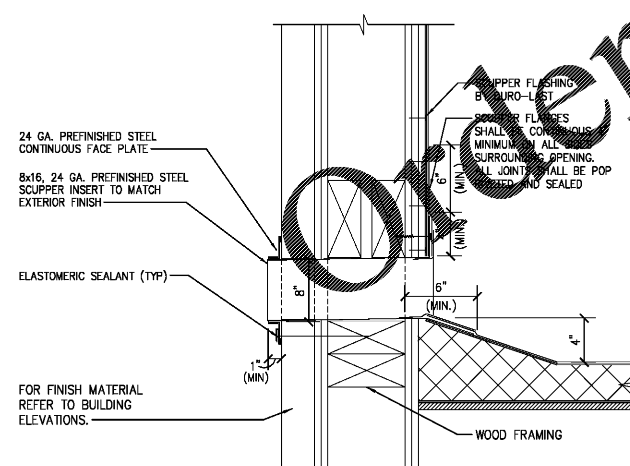

OVERFLOW SCUPPER DRAIN DETAIL (4)
SCALE: NONE

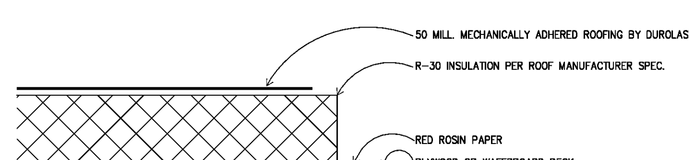

STANDARD ROOFING SECTION (1)
SCALE: 3" = 1'-0"

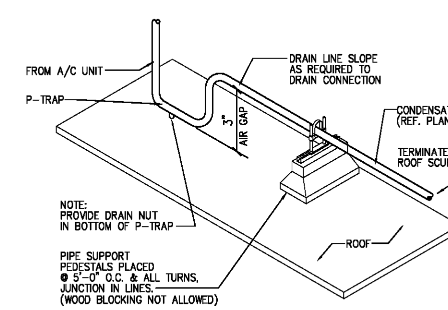

CONDENSATE LINE SUPPORT DETAIL (8)
SCALE: NONE

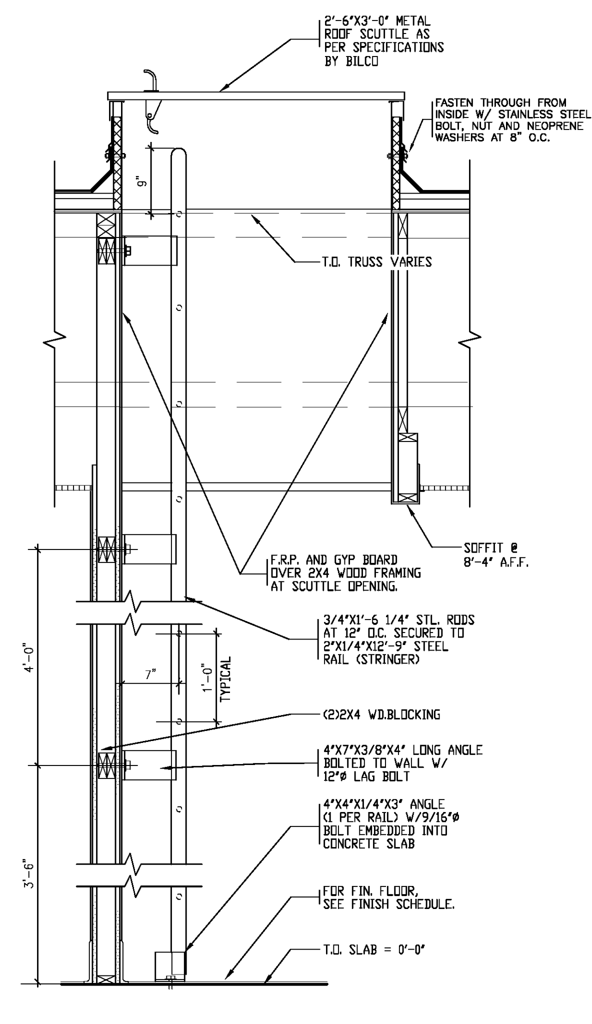

ROOF SCUTTLE DETAIL (10)
SCALE: 3/4" = 1'-0"

B1916

DATE	RELEASE
08.26.19	FOR CONSTRUCTION
~	~
~	~
~	~
~	~
~	~
~	~
~	~
~	~
~	~
~	~
~	~
~	~

CHECKED BY: AK
DRAWN BY: CY

NOTE: THESE DRAWINGS ARE THE PROPERTY OF ARIE KOHN ARCHITECTS, P.C. AND SHALL NOT BE USED, REPRODUCED, AND/OR MODIFIED WITHOUT WRITTEN CONSENT FROM ARIE KOHN ARCHITECTS, P.C.

DRAWINGS FOR:
BRUCE DANIELS
CAROLINA RE HOLDINGS, LLC
P.O. BOX 711
GREENWOOD, SC 29649
646-462-5481

ARIE KOHN ARCHITECTS, PC
74 WOODSTOCK ROAD, ROSWELL, GA. 30075
TEL. (770) 642-9030 FAX. (770)642-3755
EMAIL: arie@akohnarch.com

206 LONGSTREET ST.
KINGSTREE, SC 29556
PROJECT: B1916
DATE: 07/22/2019

BURGER KING RESTAURANT

ROOF PLAN AND DETAILS

A-5.0

Order Plans @ WWW.LDIline.com