Shane R. Hamilton P.E.
CONSULTING ENGINEER
912 W. Dr. Martin Luther King Jr Blvd
Tampa, FL 33603 (813) 251-6848

DRAWING INFORMATION		
DATE	DESCRIPTION	BY
08-01-19	FOR CONSTRUCTION	KM

N • C • A
CONSULTANTS/GROUP
4585 140TH AVE. NORTH, SUITE #1001
CLEARWATER, FLORIDA
PHONE: (877) 530-0078
CALL NCA MARKETING FOR PRICING
NCA JOB# 19937

NORTH AMERICAN BROILER/OVEN HOOD – DUKE BROILER

BROILER/OVEN HOOD MODEL: ELX-ND-BDL-PM-OB-43-(BK-NA-BOH-7-7)

Manufactured by: Gaylord Industries

Broiler/Oven Hood Specifications
Gaylord Model ELX-ND-BDL-PM-OB-43-(BK-NA-BOH-7-7), canopy style wall mounted broiler/oven hood 7'-7" long x 43" front to back. The hood is specifically designed to go over a Nieco MPB94 or Duke FBB broiler and a half size convection oven. The hood is designed for either a Standard or Reverse ROC building. The ends and front panels are insulated double wall construction, and the top is covered with 3" thick insulation. The hood utilizes patented high efficiency stainless steel Gaylord XGS Extractors. The extractor testing mirror ASTM Standard F2519 -2005, and are ETL Listed to UL Standard 1046. The hood design includes a built in 5" air space at the back for allowing direct mounting to a limited combustible wall (sheet rock on metal studs) for compliance to NFPA-96. Also built into the back of the hood are utility raceways that are used for gas piping and electrical services. The hood includes factory pre-piping for an Amerex KP fire extinguishing system or as an option may be pre-piped for an ANSUL R-102 fire system. The hood is constructed of all 18 gauge, type 300 series stainless steel, number 4 finish.
Enclosure Panels Included is a stainless steel enclosure kit to fill the space between the top of the hood and the finished ceiling. The panels are constructed of 18 gauge type 430 stainless steel, number 4 finish.
Wall Flashing One set of wall flashing for broiler/oven hood as shown on the drawings. Flashing is constructed of 18 gauge type 430 stainless steel, number 4 finish.
Hanging Weight: The hanging weight of the broiler/oven hood is 450 lbs.

HOOD LISTING AND APPROVAL REFERENCE

BROILER/OVEN HOOD
INTERTEK TESTING SERVICES, INC.
BROILER HOOD IS E.T.L. LISTED EXHAUST HOODS WITHOUT EXHAUST DAMPERS, REPORT NO. 3130583CRT-008. TESTED UNDER U.L.STANDARD 710.

NATIONAL FIRE PROTECTION ASSOCIATION
MEETS ALL REQUIREMENTS OF NFPA-96
"STANDARD FOR VENTILATION CONTROL & FIRE PROTECTION OF COMMERCIAL COOKING OPERATIONS"

NSF-NATIONAL SANITATION FOUNDATION
MEETS ALL REQUIREMENTS OF NSF STANDARD NO.2
"FOOD SERVICE EQUIPMENT"

MECHANICAL CODES
MEETS ALL REQUIREMENTS OF THE UMC, BOCA, SBCCI AND IMC.

NEW YORK CITY DEPARTMENT OF BUILDING
MEA NO. 113-89-M

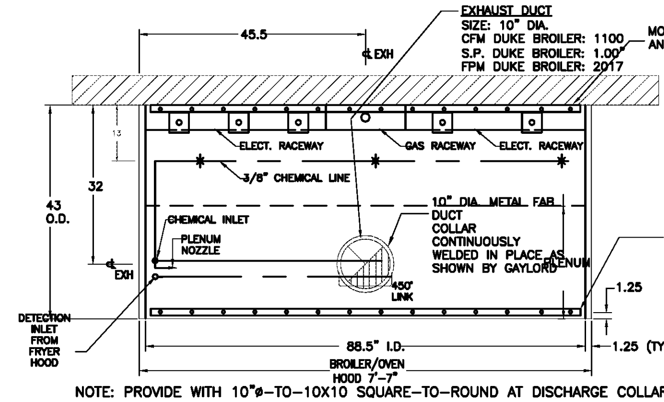

NOTE: PROVIDE WITH 10"ø-TO-10X10 SQUARE-TO-ROUND AT DISCHARGE COLLAR
PLAN VIEW – FIRE SYSTEM PIPING LOCATIONS

NOTES:
1. NIECO MPB94 BROILER REQUIRES 208-240V, 30 AMP NEMA TWIST LOCK LG 30R
2. DUKE BROILER REQUIRES SINGLE RECEPTACLE NEMA 520R HOSPITAL GRADE (ORANGE) 120V/20AMP.
3. IF LOCAL CODE REQUIRES G.F.I. PROTECTION, THE PROTECTION SHALL BE PROVIDED IN THE CIRCUIT BREAKER PANEL BY THE ELECTRICIAN.

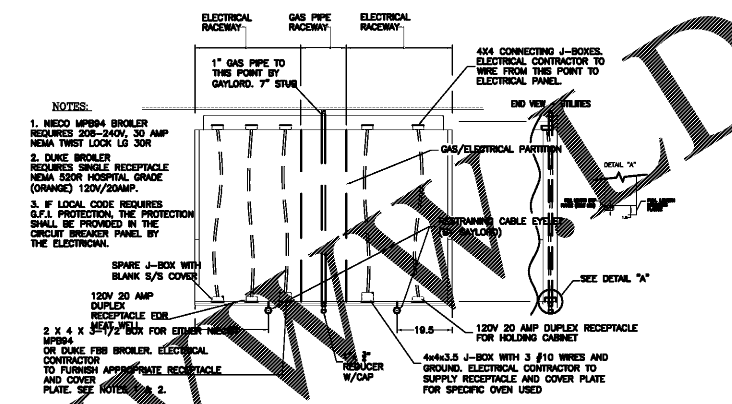

FRONT ELEVATION – UTILITY CHASE

5'-7" NORTH AMERICAN FRYER HOOD (FREE STANDING)

FRYER HOOD MODEL: ELX-ND-BD-38-(BK-NAFH-5-7)

Manufactured by: Gaylord Industries

Fryer Hood Specifications
Gaylord model ELX-ND-BD-38-(BK-NAFH-5-7) low proximity, freestanding hood 5'-7" long x 38" front to back. The hood is designed to go over either a 3 Basket/2 Basket/3 Basket Fryer Configuration, or a four 2 basket fryer configuration. This hood is not designed for a 3 Basket/2 Basket/Fry Dispenser/3 Basket configuration. The hood utilizes patented high efficiency stainless steel Gaylord XGS Extractors. Also built into the back of the hood are utility raceways that are used for gas piping and electrical services. The hood includes factory pre-piping for an Amerex KP fire extinguishing system or as an option may be pre-piped for an ANSUL R-102 fire system. The hood is constructed of all 18 gauge, type 300 series stainless steel, number 4 finish.
Enclosure Panels
Included is an enclosure kit to fill the space between the top of the hood and the finished ceiling. Lift-out doors in the front and right panels are provided to gain access to the duct access panel, fire protection equipment and static pressure tap. Panels are constructed of 18 gauge type 430 stainless steel, number 4 finish.
Optional Wall Flashing
One set of wall flashing for the fryer hood as shown on the drawings. Flashing constructed of 18 gauge type 430 stainless steel, number 4 finish.
Hanging weight:
The hanging seight of the fryer hood is 350 lbs.

HOOD LISTING AND APPROVAL REFERENCE

FRYER HOOD
INTERTEK TESTING SERVICES, INC.
FRYER HOOD IS E.T.L. LISTED: EXHAUST HOODS WITHOUT EXHAUST DAMPERS, REPORT NO. 3192203CRT-002. TESTED TO U.L. STANDARD 710 REQUIREMENTS.

NATIONAL FIRE PROTECTION ASSOCIATION
MEETS ALL REQUIREMENTS OF NFPA-96 "STANDARD FOR VENTILATION CONTROL & FIRE PROTECTION OF COMMERCIAL COOKING OPERATIONS"

NSF-NATIONAL SANITATION FOUNDATION
MEETS ALL REQUIREMENTS OF NSF STANDARD NO.2
"FOOD SERVICE EQUIPMENT"

MECHANICAL CODES
MEETS ALL REQUIREMENTS OF THE UMC, BOCA, SBCCI AND IMC.

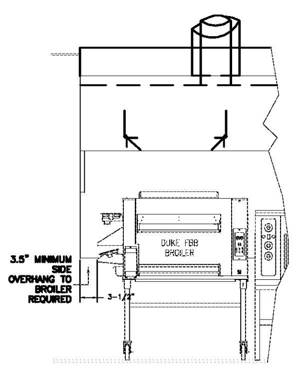

FRONT ELEVATION
WITH DUKE FBB BROILER

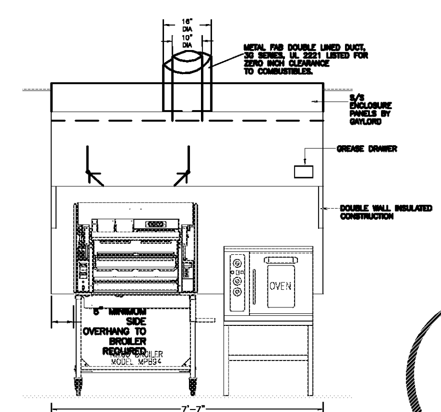

FRONT ELEVATION
WITH NIECO BROILER MPB94

FRYER/HOOD DETAILS

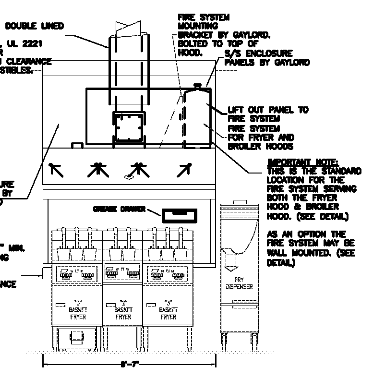

FRONT ELEVATION 1
1ST BEST PRACTICE

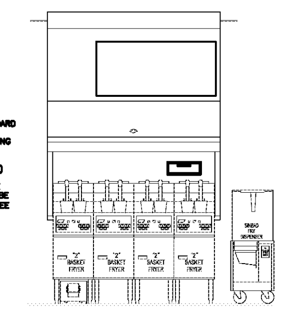

FRONT ELEVATION 2
2ND BEST PRACTICE

IMPORTANT NOTE:
This drawing depicts two basic fryer configurations approved by Burger King Corporation.

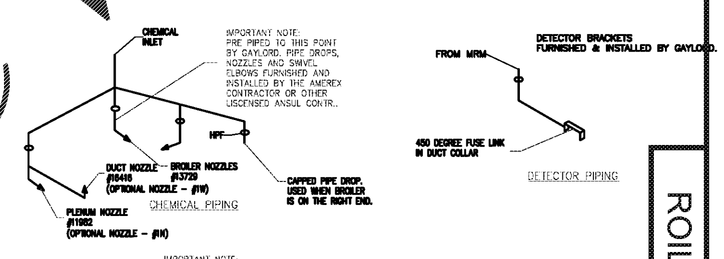

IMPORTANT NOTE:
ALL BLOW OFF CAPS TO BE HIGH TEMPERATURE METAL WHEN BY AMEREX USE PART #12504

AMEREX PIPING DETAILS
BROILER/OVEN HOOD

HPF=HOOD PENETRATION FITTING

ROILER/HOOD DETAILS

BROILER/OVEN EXHAUST FAN SPECS
COOK MODEL 120 CPS: 1100 CFM, 1.50" S.P. CCW ROTATION, 3/4 HP 208V/1 PH/60 MOTOR, UL 762, HI TEMP EZ CLEAN COAT, STEEL ACCESS DOOR, HANGING GREASE TROUGH, PREWIRED NEMA DISCONNECT,TOP HORIZONTAL DISCHARGE WITH PUNCHED UL762 FLANGE, CURB CAP & INLET BOX, ROOF CURB, AND PRE-WIRED CURRENT SENSOR.
ROOF CURB SPECS COOK MODEL RCG-30x46x12 NO NAILER

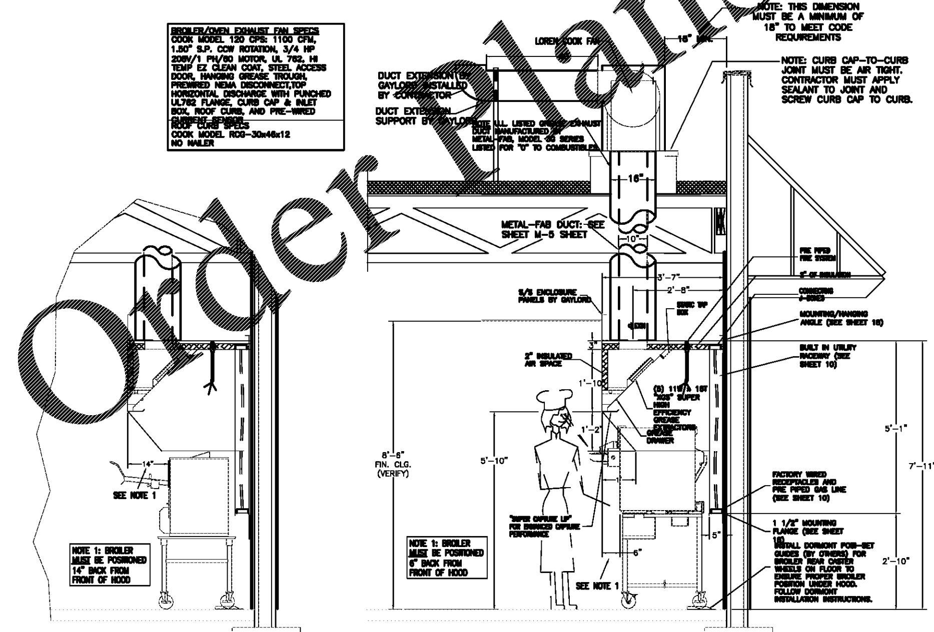

DUKE FBB BROILER

BROILER HOOD SECTION WITH NIECO MPB94 BROILER

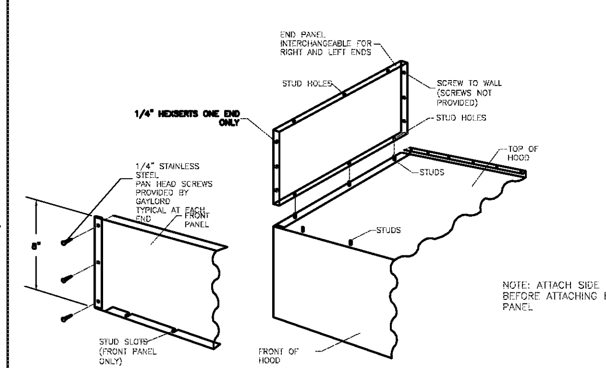

BROILER HOOD ENCLOSURE PANELS
INSTALLATION INSTRUCTIONS

FRYER EXHAUST FAN SPECS
COOK MODEL 100 CPS: 800 CFM, S.P 2.5, CCW ROTATION @ 2675 RPM, 1 HP 208V/1 PH/60 MOTOR, UL 762, HI-TEMP EZ CLEAN COAT, STEEL ACCESS DOOR, STEEL DRAIN, HANGING GREASE TROUGH, PREWIRED NEMA 3 DISCONNECT, HORIZONTAL DISCHARGE WITH UL 762 PUNCHED FLANGE, PREWIRED CURRENT SENSOR, ROOF CURB CAP & INLET BOX.
ROOF CURB SPECS COOK MODEL RCG-30x46x18 NO NAILER

NOTE 1
U.L. LISTED GREASE EXHAUST DUCT MANUFACTURED BY METAL-FAB, MODEL 3G SERIES LISTED FOR "0" TO COMBUSTIBLES.

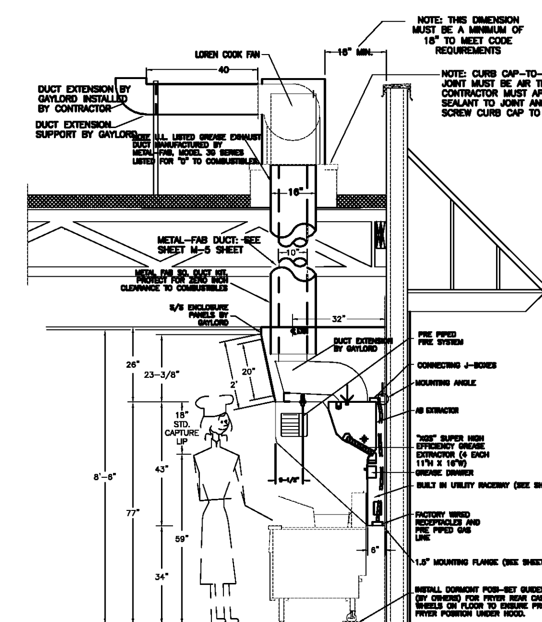

FRYER HOOD SECTION VIEW

IMPORTANT NOTE:
BEST PRACTICE IS TO INSTALL DORMONT POSI-SET GUIDES ON THE REAR CASTERS OF EACH FRYER. THIS ENSURES PROPER POSITIONING OF THE FRYERS FOR THE FIRE PROTECTION NOZZLES AND OPERATION OF THE HOOD.

POSITION THE LEFT FRYER 2" IN FROM THE LEFT EDGE OF HOOD. PUSH FRYER BACK UNTIL IT CONTACTS THE BACK OF THE HOOD. THEN FOLLOW THE DORMONT INSTRUCTIONS FOR MOUNTING THE POSI-SET GUIDES TO THE FLOOR. POSITION THE REMAINING FRYERS ACCORDINGLY & INSTALL THE POSI-SETS.

THE POSI-SET GUIDES ARE NOT PROVIDED BY GAYLORD.

© Copyright 2019- Drawings, specifications, notes, database, computer files, field data, and reports as instruments of service prepared by the Design of Record. As instruments of services, these items remain the property of the Design of Record, who shall retain all statutory and other reserved rights, including the copyright thereto. Any use, reproduction or changes to these documents without written consent of NCA Consultants is a violation of federal copyright laws.

B1914

DATE	RELEASE
08.26.19	FOR CONSTRUCTION
~	~
~	~
~	~
~	~
~	~
~	~
~	~
~	~
~	~
~	~
~	~
~	~
~	~

CHECKED BY: AK
DRAWN BY: CY

NOTE:
THESE DRAWINGS ARE THE PROPERTY OF ARIE KOHN ARCHITECTS, P.C. AND SHALL NOT BE USED, REPRODUCED, AND/OR MODIFIED WITHOUT WRITTEN CONSENT FROM ARIE KOHN ARCHITECTS, P.C.

DRAWINGS FOR:
BRUCE DANIELS
CAROLINA FRANCHISE HOLDINGS, LLC
P.O. BOX 711
GREENWOOD, SC 29648

ARIE KOHN ARCHITECTS, PC
74 WOODSTOCK ROAD, ROSWELL, GA. 30075
TEL. (770) 642-9030 FAX. (770)642-3755
EMAIL: arie@akohnarch.com

SHANE HAMILTON, P.E.
912 W. MLK BLVD. TAMPA, FL
SOUTH CAROLINA LIC #35544

SOUTH CAROLINA PROFESSIONAL ENGINEER No 35544 SHANE HAMILTON 8/2/19

406 & 408 EAST MAIN ST.
ANDREWS, SC 29510
PROJECT: B1914
DATE: 07/22/2019

BURGER KING RESTAURANT
#06-0008-021-00-00

HOOD DETAILS

M-4

Order Plans @ WWW.LDILine.com