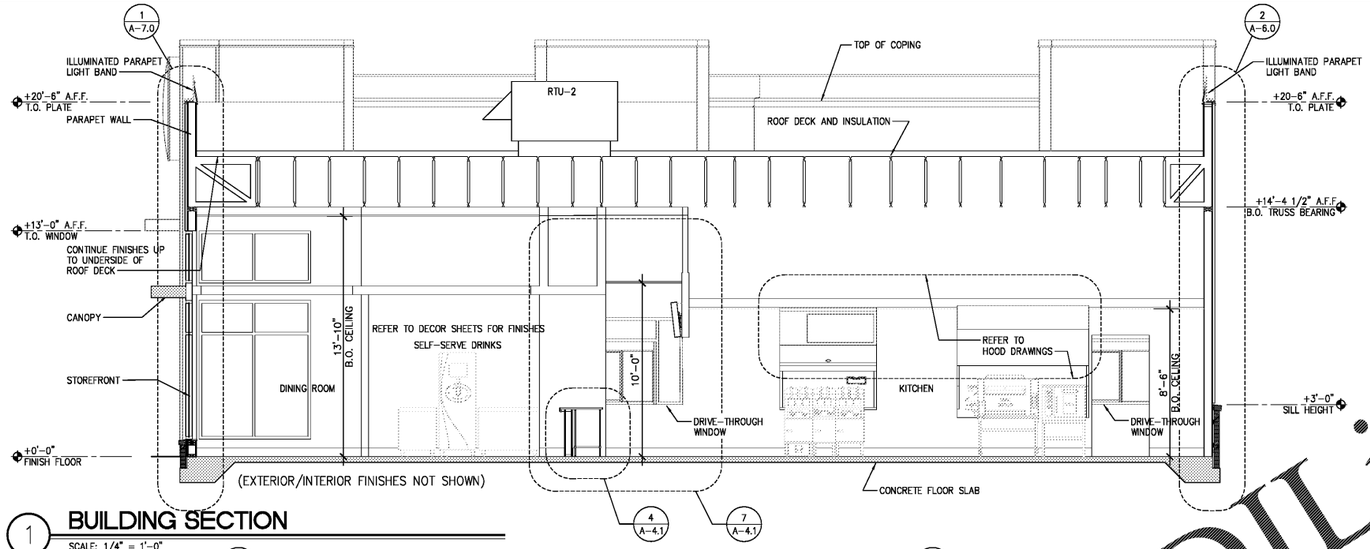

1 BUILDING SECTION

SCALE: 1/4" = 1'-0"

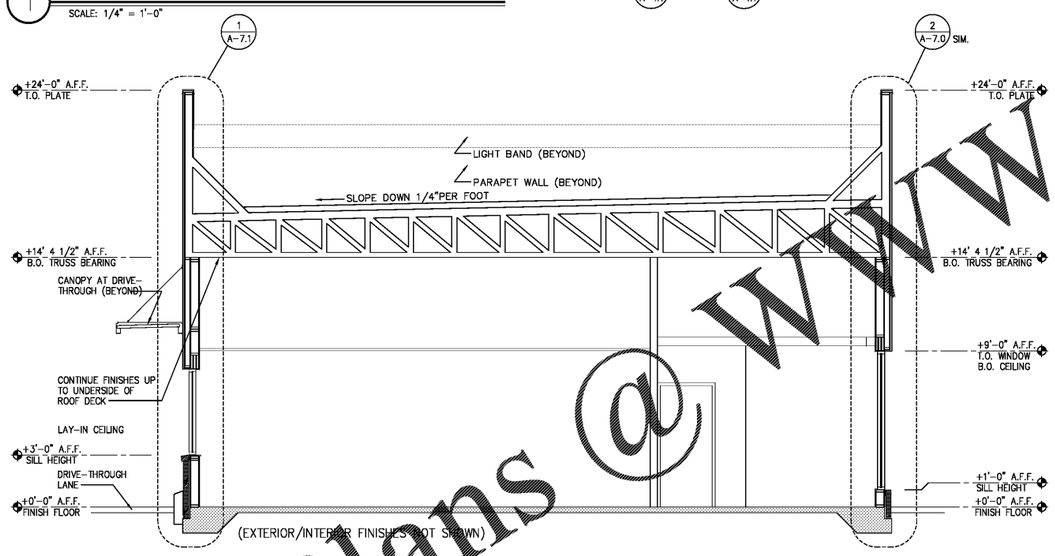

2 BUILDING SECTION

SCALE: 1/4" = 1'-0"

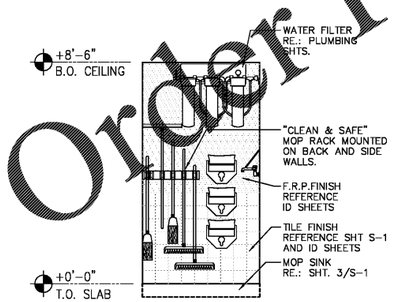

3 INTERIOR ELEVATION

SCALE: 3/8" = 1'-0"

Order Plans @ www.LDILine.com

B1914

DATE	RELEASE
08.26.19	FOR CONSTRUCTION
~	~
~	~
~	~
~	~
~	~
~	~
~	~
~	~
~	~
~	~
~	~
~	~
~	~

CHECKED BY: AK
DRAWN BY: CY

NOTE:
THESE DRAWINGS ARE THE PROPERTY OF ARIE KOHN ARCHITECTS, P.C. AND SHALL NOT BE USED, REPRODUCED, AND/OR MODIFIED WITHOUT WRITTEN CONSENT FROM ARIE KOHN ARCHITECTS, P.C.

DRAWINGS FOR:
BRUCE DANIELS
CAROLINA RE HOLDINGS, LLC
P.O. BOX 711
GREENWOOD, SC 29649
646-482-5481

ARIE KOHN ARCHITECTS, P.C.
74 WOODSTOCK ROAD, ROSWELL, GA. 30075
TEL. (770) 842-9030 FAX. (770)642-3755
EMAIL: arie@akohnarch.com

STATE OF SOUTH CAROLINA
ARIE KOHN
REGISTERED ARCHITECT

406 & 408 EAST MAIN ST.
ANDREWS, SC 29510

PROJECT: B1914
DATE: 07/22/2019

BURGER KING RESTAURANT
#06-0008-021-00-00

BUILDING SECTIONS AND INTERIOR ELEVATIONS

A-3.0