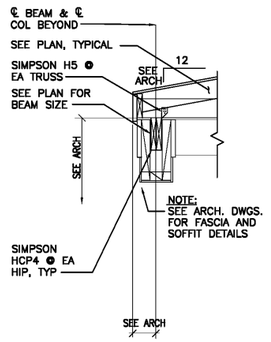

SECTION 1 P-S4.0
3/4"=1'-0"

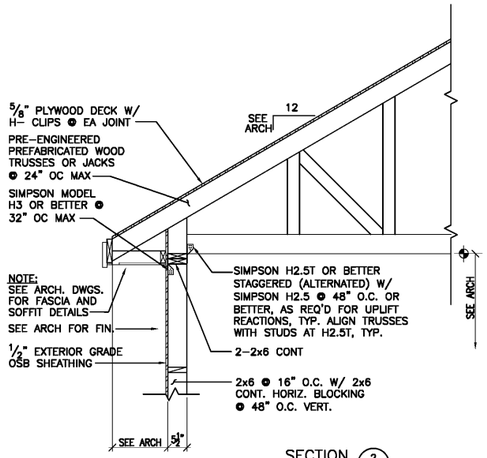

SECTION 2 P-S4.0
3/4"=1'-0"

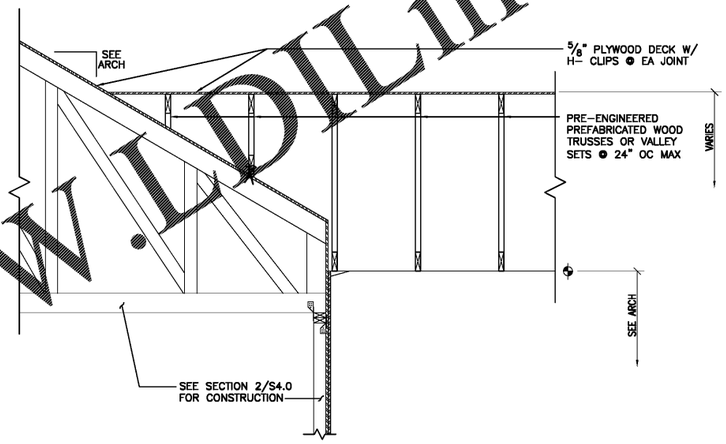

SECTION 3 P-S4.0
3/4"=1'-0"

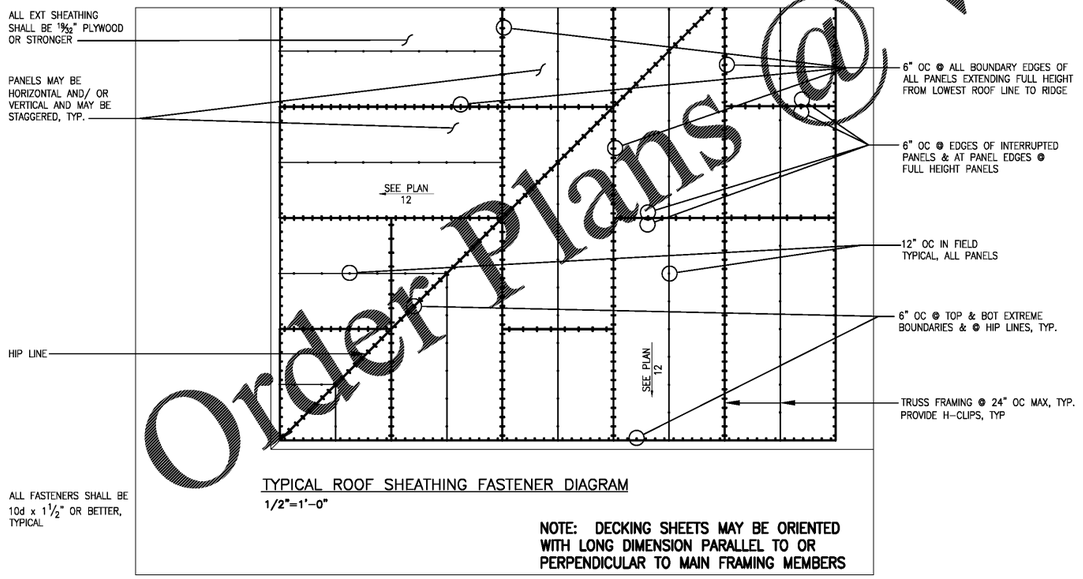

TYPICAL ROOF SHEATHING FASTENER DIAGRAM
1/2"=1'-0"

NOTE: DECKING SHEETS MAY BE ORIENTED WITH LONG DIMENSION PARALLEL TO OR PERPENDICULAR TO MAIN FRAMING MEMBERS

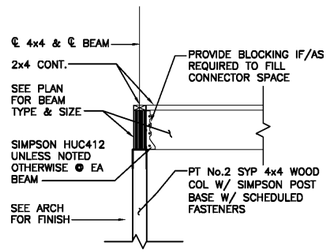

DETAIL A P-S4.0
3/4"=1'-0"

AUBURN STRUCTURAL DESIGN, INC.
ROY H. MAYO, JR. P.E.
2008 JANABROOKE LN
AUBURN, AL 36830
(334) 826-8040
engineer@austructure.com/
www.austructure.com

Order Plans @ WWW.LDILine.com

Pate Design Group, Inc.
Architecture / Interiors
4168 Abbotts Bridge Road
Duluth, Georgia 30097
(p) 770.814.0885
(f) 770.814.0886
Kirby@patedesigngroup.com

POOL PAVILLION
WISTERIA RIDGE
Will-O-War LLC
75 North Main Street
Watkinsville, GA 30677

Issue & Revisions:

No.	Date	Description
1	04.01.19	CLARIFICATION

ROOF FRAMING SECTIONS + DETAILS

Drawn CKT
Checked RHM
Contract No. 07-03
Scale AS NOTED

GEORGIA REGISTERED PROFESSIONAL ENGINEER ROY HOWARD MAYO, JR.

030519
040119

P-S4.0
of sheets

THIS DRAWING IS THE PROPERTY OF PATE DESIGN GROUP AND IS NOT TO BE COPIED IN WHOLE OR IN PART. IT IS TO BE USED FOR THE PROJECT AND SITE SPECIFICALLY IDENTIFIED HEREIN AND IS NOT TO BE USED IN ANY OTHER PROJECT. IT IS TO BE RETURNED UPON REQUEST.

RELEASED FOR CONSTRUCTION