FINISH LEGEND

ACT ACOUSTICAL CEILING TILE
AFB ATHLETIC FLOOR BASE
AWP ACOUSTICAL WALL PANEL
CB CERAMIC BASE
CMU CONCRETE MASONRY UNIT
CONC CONCRETE
CPT CARPET
CT CERAMIC TILE
EXP EXPOSED STRUCTURE
ga GAUGE
GWB GYPSUM WALL BOARD
GYP. BD. GYPSUM BOARD
HDW HARDWARE
HM HOLLOW METAL
INSUL INSULATED
LAM LAMINATE
MAT MATERIAL
MP CORRUGATED METAL PANEL
PCB PORCELAIN CERAMIC BASE
POR PORCELAIN CERAMIC TILE
PCONC POLISHED CONCRETE
PR PAIR
PT PAINT
QT QUARRY TILES
RB RESILIENT BASE
RST RESILIENT STAIR TREAD
SAP SOUND ATTENUATION PANEL
SBA SELECTED BY ARCHITECT
SCONC SEALED CONCRETE
SS STAINLESS STEEL
STL STEEL
STRUCT STRUCTURE
VCT VINYL COMPOSITION TILES
VL VINYL FLOORING
WD WOOD

NOTE: THE ABBREVIATIONS IN THIS LEGEND ARE TYPICAL AND MAY OR MAY NOT APPLY. THERE MAYBE ABBREVIATIONS IN THIS LEGEND WHICH DO NOT OCCUR IN THESE DRAWINGS.

DOOR SCHEDULE

DOOR									FRAME									
		SIZE									SIZE							
DOOR NO.	TYPE	WIDTH	HEIGHT	THK'NESS	UNDERCUT	MATERIAL	GLASS	LABEL	MATERIAL	TYPE	HEAD	JAMB	THRESHOLD	LABEL	DOOR/ FRAME NOTES	HDW SET	REMARKS	DOOR NO.
01	D2	PR 3'-6"	7'-0"	1 3/4"	SEE SPECS.	14 ga. STEEL	NO GLASS	NO LABEL	12 ga. STEEL	F3	1/A3.1	2/A3.1	–	–	PAINT FINISH	SEE SPECS.	DOOR AND FRAME SHALL MEET ICC/NSSC 500 STANDANDS	01
02	D2	PR 3'-6"	7'-0"	1 3/4"	SEE SPECS.	14 ga. STEEL	NO GLASS	NO LABEL	12 ga. STEEL	F3	1/A3.1	2/A3.1	–	–	–	SEE SPECS.	DOOR AND FRAME SHALL MEET ICC/NSSC 500 STANDANDS	02
03	D2	3'-6"	7'-0"	1 3/4"	SEE SPECS.	14 ga. STEEL	NO GLASS	NO LABEL	12 ga. STEEL	F2	1/A3.1	2/A3.1	–	–	–	SEE SPECS.	DOOR AND FRAME SHALL MEET ICC/NSSC 500 STANDANDS	03
04	D1	3'-0"	7'-0"	1 3/4"	3/8"	HOLLOW METAL	NO GLASS	NO LABEL	HOLLOW METAL	F1	4/A3.1	5/A3.1	–	–	–	SEE SPECS.		04
05	D1	3'-0"	7'-0"	1 3/4"	3/8"	HOLLOW METAL	NO GLASS	NO LABEL	HOLLOW METAL	F1	4/A3.1	5/A3.1	–	–	–	SEE SPECS.		05
06	D1	3'-0"	7'-0"	1 3/4"	3/8"	HOLLOW METAL	NO GLASS	NO LABEL	HOLLOW METAL	F1	4/A3.1	5/A3.1	–	–	–	SEE SPECS.		06
07	D1	3'-0"	7'-0"	1 3/4"	3/8"	HOLLOW METAL	NO GLASS	NO LABEL	HOLLOW METAL	F1	4/A3.1	5/A3.1	–	–	–	SEE SPECS.		07
08	D1	3'-0"	7'-0"	1 3/4"	3/8"	HOLLOW METAL	NO GLASS	NO LABEL	HOLLOW METAL	F1	4/A3.1	5/A3.1	–	–	–	SEE SPECS.		08
09	D1	3'-0"	7'-0"	1 3/4"	3/8"	HOLLOW METAL	NO GLASS	NO LABEL	HOLLOW METAL	F1	4/A3.1	5/A3.1	–	–	–	SEE SPECS.		09
10	D1	3'-0"	7'-0"	1 3/4"	3/8"	HOLLOW METAL	NO GLASS	NO LABEL	HOLLOW METAL	F1	4/A3.1	5/A3.1	–	–	–	SEE SPECS.		10
11	D2	PR 3'-6"	7'-0"	1 3/4"	SEE SPECS.	14 ga. STEEL	NO GLASS	NO LABEL	12 ga. STEEL	F3	1/A3.1	2/A3.1	–	–	–	SEE SPECS.	DOOR AND FRAME SHALL MEET ICC/NSSC 500 STANDANDS	11
12	D2	PR 3'-6"	7'-0"	1 3/4"	SEE SPECS.	14 ga. STEEL	NO GLASS	NO LABEL	12 ga. STEEL	F3	1/A3.1	2/A3.1	–	–	–	SEE SPECS.	DOOR AND FRAME SHALL MEET ICC/NSSC 500 STANDANDS	12
13	D3	3'-0"	3'-0"	2"	–	1/4" STEEL	NO GLASS	NO LABEL	1/4" STEEL	F4	3/A3.1	3/A3.1	–	–	–	–	DOOR AND FRAME SHALL MEET ICC/NSSC 500 STANDANDS	12

ROOM FINISH & COLOR SCHEDULE

		FLOOR		BASE		WALLS								CEILING			REMARKS
						NORTH		EAST		SOUTH		WEST					
ROOM NO.	ROOM NAME	MAT.	COLOR	MAT.	COLOR	MAT.	COLOR	MAT.	COLOR	MAT.	COLOR	MAT.	COLOR	MAT.	COLOR	HEIGHT	
FIRST FLOOR																	
100	SAFE ROOM AREA	VL	SBA	CMU	SBA	MP/GWB-PT	SBA	CMU/PT	SBA	MP/GWB-PT	SBA	MP/GWB-PT	SBA	EXP.	SBA	STRUCT.	
101	ENTRY 1	SCONC	SBA	NO BASE	–	CONC-PT	SBA	CONC-PT	SBA	CONC-PT	SBA	CONC-PT	SBA	GYP. BD.	SBA	7'-5"	
102	ENTRY 2	SCONC	SBA	NO BASE	–	CONC-PT	SBA	CONC-PT	SBA	CONC-PT	SBA	CONC-PT	SBA	GYP. BD.	SBA	7'-5"	
103	GENERATOR ROOM	SCONC	SBA	NO BASE	–	CONC	SBA	CONC	SBA	CONC	SBA	CONC	SBA	EXP.	SBA	STRUCT.	
104	ALCOVE	SCONC	SBA	NO BASE	–	CONC	SBA	CMU/PT	SBA	CMU/PT	SBA	CONC	SBA	EXP.	SBA	STRUCT.	
105	SUPPLY ROOM	SCONC	SBA	NO BASE	–	CMU/PT	SBA	CMU/PT	SBA	CONC	SBA	CONC	SBA	EXP.	SBA	STRUCT.	
106	ELEC. ROOM	SCONC	SBA	NO BASE	–	CONC	SBA	CONC	SBA	CONC	SBA	CMU/PT	SBA	EXP.	SBA	STRUCT.	
107	WOMEN'S	SCONC	SBA	RB	SBA	GWB-PT	SBA	CMU/PT	SBA	CMU/PT	SBA	CMU/PT	SBA	EXP.	SBA	STRUCT.	
108	ALCOVE	SCONC	SBA	RB	SBA	CMU/PT	SBA	CMU/PT	SBA	CMU/PT	SBA	CMU/PT	SBA	EXP.	SBA	STRUCT.	
109	JANITOR	SCONC	SBA	RB	SBA	CMU/PT	SBA	CMU/PT	SBA	GWB-PT	SBA	CMU/PT	SBA	EXP.	SBA	STRUCT.	
110	MEN'S	SCONC	SBA	RB	SBA	CMU/PT	SBA	CONC-PT	SBA	GWB-PT	SBA	CMU/PT	SBA	EXP.	SBA	STRUCT.	
111	OFFICE	VCT	SBA	RB	SBA	CMU/PT	SBA	GWB-PT	SBA	CMU/PT	SBA	CMU/PT	SBA	EXP.	SBA	STRUCT.	
112	ENTRY 3	SCONC	SBA	NO BASE	–	CONC-PT	SBA	CONC-PT	SBA	CONC-PT	SBA	CONC-PT	SBA	GYP. BD.	SBA	7'-5"	
113	MECHANICAL AREA	ROOFING MATERIAL	SBA	NO BASE	–	CONC-PT	SBA	CONC-PT	SBA	CONC-PT	SBA	CONC-PT	SBA	EXP.	SBA	STRUCT.	
114	MECHANICAL/ ELECTRICAL AREAS	SCONC	SBA	NO BASE	–	GWB-PT	SBA	–	–	–	SBA	GWB-PT	SBA	EXP.	SBA	STRUCT.	
115	SUPPLY ROOM	SCONC	SBA	NO BASE	–	–	–	GWB-PT	SBA	GWB-PT	SBA	–	–	EXP.	SBA	STRUCT.	
116	STOR. AREA	SCONC	SBA	NO BASE	–	GWB-PT	SBA	–	–	–	–	GWB-PT	SBA	EXP.	SBA	STRUCT.	
117	STOR. AREA	SCONC	SBA	NO BASE	–	–	–	–	–	GWB-PT	SBA	GWB-PT	SBA	EXP.	SBA	STRUCT.	

LOUVER SCHEDULE

LOUVERS AND FRAMES				OPENINGS		DETAILS				LOCATION	REMARKS
DENOTATION		SIZE		SIZE							
LOUVER NO.	TYPE	WIDTH	HEIGHT	WIDTH	HEIGHT	MOUNTED	HEAD	JAMB	SILL		
L1	A	6'-0"	6'-0"	6'-0"	6'-0"	INTERNAL	6/A4.2	5/A4.2	7/A4.2	GEN. ROOM # 103	FEMA 361 COMPLIANT, DESIGN AND CONSTRUCTION FORCOMMUNITY SHELTERS, ZONE IV CRITERIA
L2	A	6'-0"	6'-0"	6'-0"	6'-0"	INTERNAL	6/A4.2	5/A4.2	7/A4.2	GEN. ROOM # 103	FEMA 361 COMPLIANT, DESIGN AND CONSTRUCTION FORCOMMUNITY SHELTERS, ZONE IV CRITERIA
L3	B	7'-0"	6'-0"	7'-0"	6'-0"	INTERNAL	6/A4.2	5/A4.2	7/A4.2	MECH. AREA # 113	FEMA 361 COMPLIANT, DESIGN AND CONSTRUCTION FORCOMMUNITY SHELTERS, ZONE IV CRITERIA
L4	A	6'-0"	6'-0"	6'-0"	6'-0"	INTERNAL	6/A4.2	5/A4.2	7/A4.2	MECH. AREA # 113	FEMA 361 COMPLIANT, DESIGN AND CONSTRUCTION FORCOMMUNITY SHELTERS, ZONE IV CRITERIA
L5	A	6'-0"	6'-0"	6'-0"	6'-0"	INTERNAL	6/A4.2	5/A4.2	7/A4.2	MECH. AREA # 113	FEMA 361 COMPLIANT, DESIGN AND CONSTRUCTION FORCOMMUNITY SHELTERS, ZONE IV CRITERIA
L6	B	7'-0"	6'-0"	7'-0"	6'-0"	INTERNAL	6/A4.2	5/A4.2	7/A4.2	MECH/ELEC. # 114	FEMA 361 COMPLIANT, DESIGN AND CONSTRUCTION FORCOMMUNITY SHELTERS, ZONE IV CRITERIA
L7	B	7'-0"	6'-0"	7'-0"	6'-0"	INTERNAL	6/A4.2	5/A4.2	7/A4.2	MECH/ELEC. # 114	FEMA 361 COMPLIANT, DESIGN AND CONSTRUCTION FORCOMMUNITY SHELTERS, ZONE IV CRITERIA
L8	C	4'-0"	4'-0"	4'-0"	4'-0"	INTERNAL	6/A4.2	5/A4.2	7/A4.2	MECH. AREA # [illegible]	FEMA 361 COMPLIANT, DESIGN AND CONSTRUCTION FORCOMMUNITY SHELTERS, ZONE IV CRITERIA

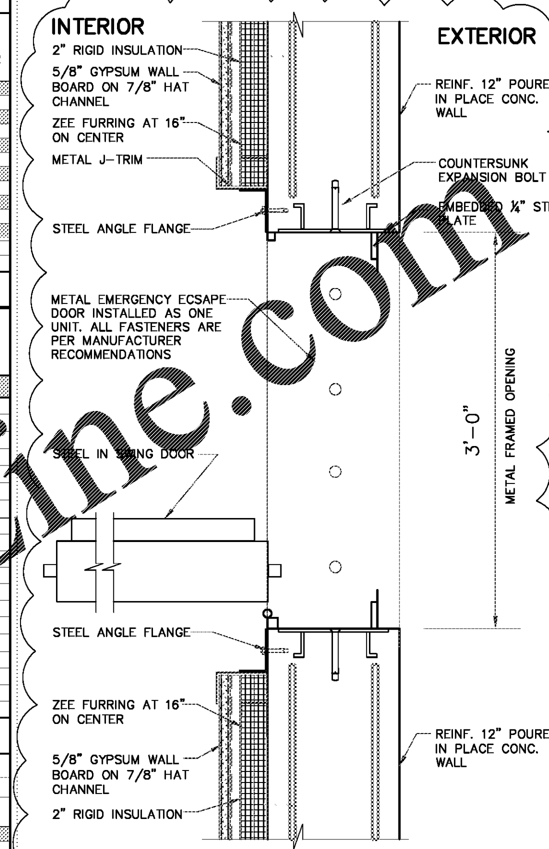

6 EMERGENCY ESCAPE DOOR PLAN DETAIL
SCALE: 1 1/2" = 1' – 0"

02

DOUBLE DOOR ENTRY DETAILS

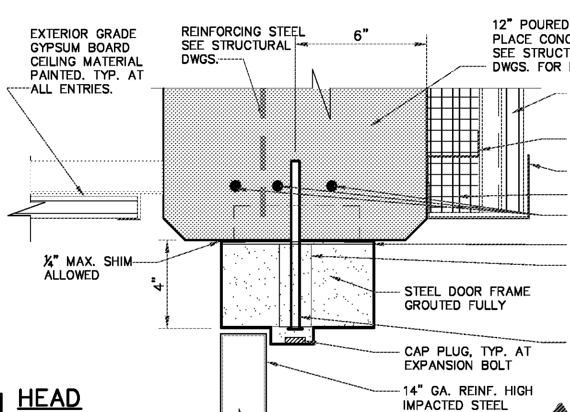

1 HEAD
SCALE: 3" = 1' – 0"

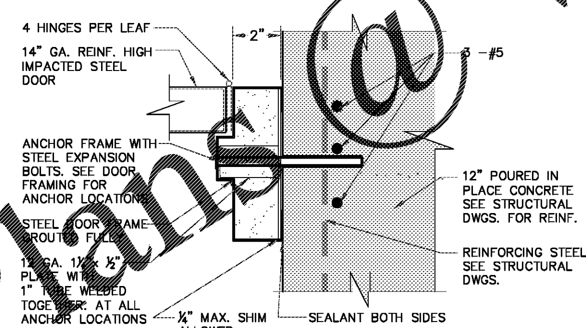

2 JAMB
SCALE: 3" = 1' – 0"

ALL IMPACT-PROTECTIVE SYSTEMS (EXTERIOR DOORS AND LOUVERS)SHALL BE SUBMITTED AND INSTALLED AS TESTED AS AN ASSEMBLY (ONE UNIT).

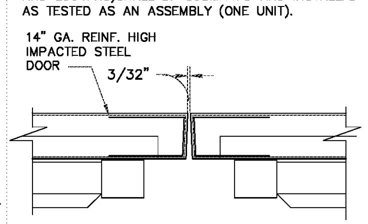

SEE SPECIFICATIONS FOR HARDWARE ASSOCIATED WITH ALL TORNADO RESISTANT DOORS, NO EXCEPTIONS.

DOOR MEETING EDGE DETAIL
SCALE: 3" = 1' – 0"

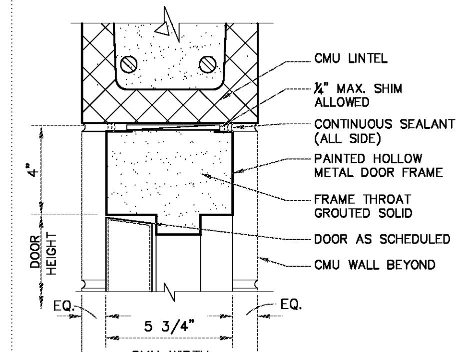

4 HEAD
SCALE: 3" = 1' – 0"

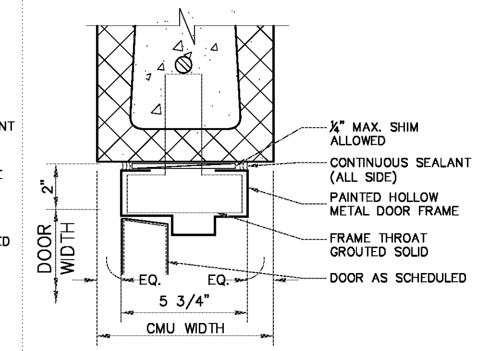

5 JAMB
SCALE: 3" = 1' – 0"

PRODUCT SHALL QUALIFY FOR USE IN TORNADO STORM SHELTER

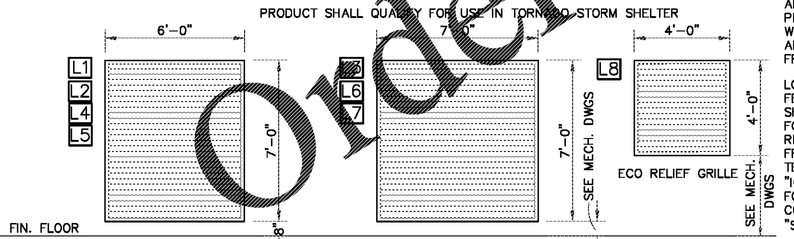

ALL LOUVERS ARE PRE-FINISHED WITH WEATHER LOUVER BLADE AND STEEL SCREEN AND FRAME

LOUVERS SHALL COMPLY FEMA 361 COMMUNITY SHELTER REQUIREMENTS FOR A TORNADO RESISTANT LOUVER AND FRAME ASSEMBLY AND TESTED TO MEET ICC 500 "ICC/NSSA STANDARD FOR THE DESIGN AND CONSTRUCTION OF "STORM SHELTERS"

SEE LOUVER DETAILS 5,6,7/A4.2

LOUVER ELEVATIONS
SCALE: 1/4"=1'-0"

PRODUCT SHALL BE IN COMPLIANCE FOR USE IN TORNADO COMMUNITY SHELTER

PAIR OF REINFORCED TORNADO RESISTANT STEEL DOORS

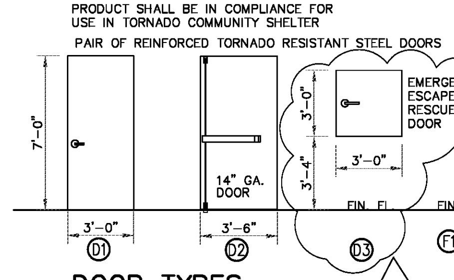

DOOR TYPES
SCALE: 1/4" = 1' – 0"

02

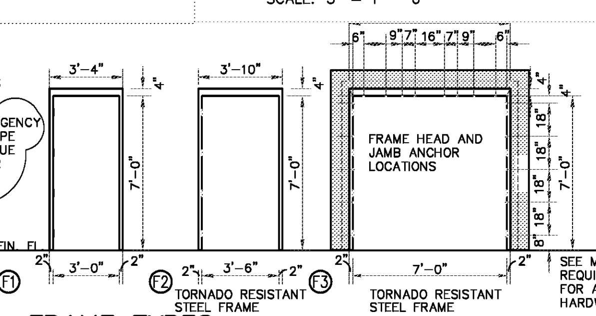

FRAME TYPES
SCALE: 1/4" = 1' – 0"

SEE MTGR REQUIREMENTS FOR ALL HARDWARE

EMERGENCY ESCAPE RESCUE DOOR

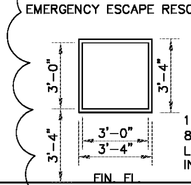

1/4" FRONT PLATE, 2" STEP SYSTEM DOOR, 8-BOLT LOCKING SYSTEM W/ 1 1/2" X 4" LOCKING BOLTS, INTERNAL RELEASE W/ IN-SWING HINGES

FRAME DETAILING IS PER MANUFACTURER'S RECOMMENDATIONS

02

THIS SET OF CONSTRUCTION DOCUMENTS ARE IN CONFORMITY WITH THE ICC/NSSA-500 2014 "STANDARD FOR THE DESIGN AND CONSTRUCTION OF STORM SHELTERS" REQUIREMENTS.

STRUCTURAL DRAWINGS ARE BASED ON ICC 500 "ICC/NSSA STANDAND FOR THE DESIGN AND CONSTRUCTION OF STORM SHELTERS." BASED ON THE "DESIGN WIND SPEED MAP FOR STORM SHELTERS," THE STRUCTURAL SYSTEMS FOR THE BUILDING WAS DESIGNED FOR ZONE IV (250 MILES PER HOUR) LOADS.

KHAFRA

SEAL

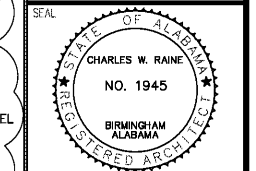

SEAL

No.	DATE	REVISION	APVD
01	04-25-2018	REVISED FINAL ABC'S COMMENTS AND REPLIES	RDSS
02	06-13-2018	PEER REVIEW REPLIES TO GMC COMMENTS	RDSS
03	04-08-2019	SECOND REVISED FINAL ABC'S COMMENTS AND REPLIES	RDSS

REUSE OF DOCUMENTS
THIS DOCUMENT WITH THE IDEAS AND DESIGNS INCORPORATED HEREIN ARE AN INSTRUMENT OF KHAFRA AND MUST NOT TO BE USED IN WHOLE OR IN PART FOR ANY OTHER PROJECT WITHOUT THE WRITTEN AUTHORIZATION OF KHAFRA

PROJECT: COMMUNITY STORM SHELTER
B.C. NO. 2014346
FOR THE
PERRY COUNTY COMMISSION
300 Washington Street, Marion Alabama
Perry County, Alabama 36756

DATE APRIL 30, 2019
DRWN. BY RDSS
DSGN. BY RDSS
CHKD. BY CWRE
APVD. BY CWRE
SCALE 1/8" = 1'- 0"

ARCHITECTURAL
SHEET TITLE
MARION STORM SHELTER
SCHEDULED AND OPENING TYPES AND DETAILS

PROJECT No. 11MON01
DRAWING No. A3.1
B.C. Project No. 2014346

CONSTRUCTION DOCUMENTS

LAST SAVE: Oct/15/2018 1:17 PM PLOTTED BY: ROY STOVES PLOT DATE: May/3/2019 1:19 AM
FILE: R:\Engineer\11MON01 PERRY COUNTY COMMUNITY SHELTERS\Drawings\PERRY COUNTY COMMUNITY SHELTER - MARION\Sheets\A3.1 SCHEDULES & DETAILS.dwg

Order Plans @ WWW.LDILine.com