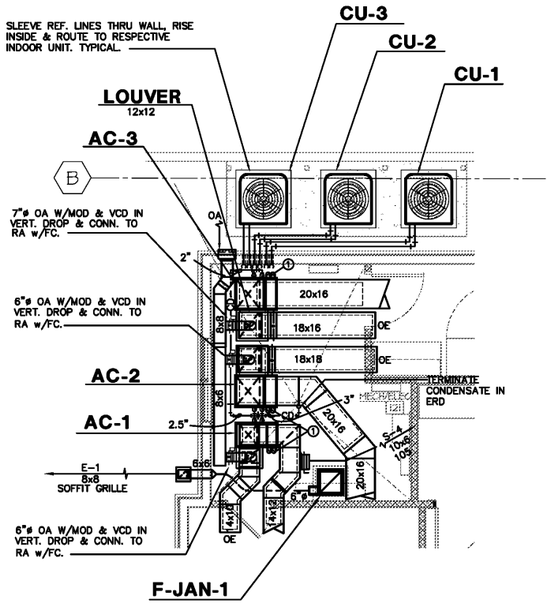

HVAC MECH. RM PART PLAN

SCALE: 1/4" = 1'-0"

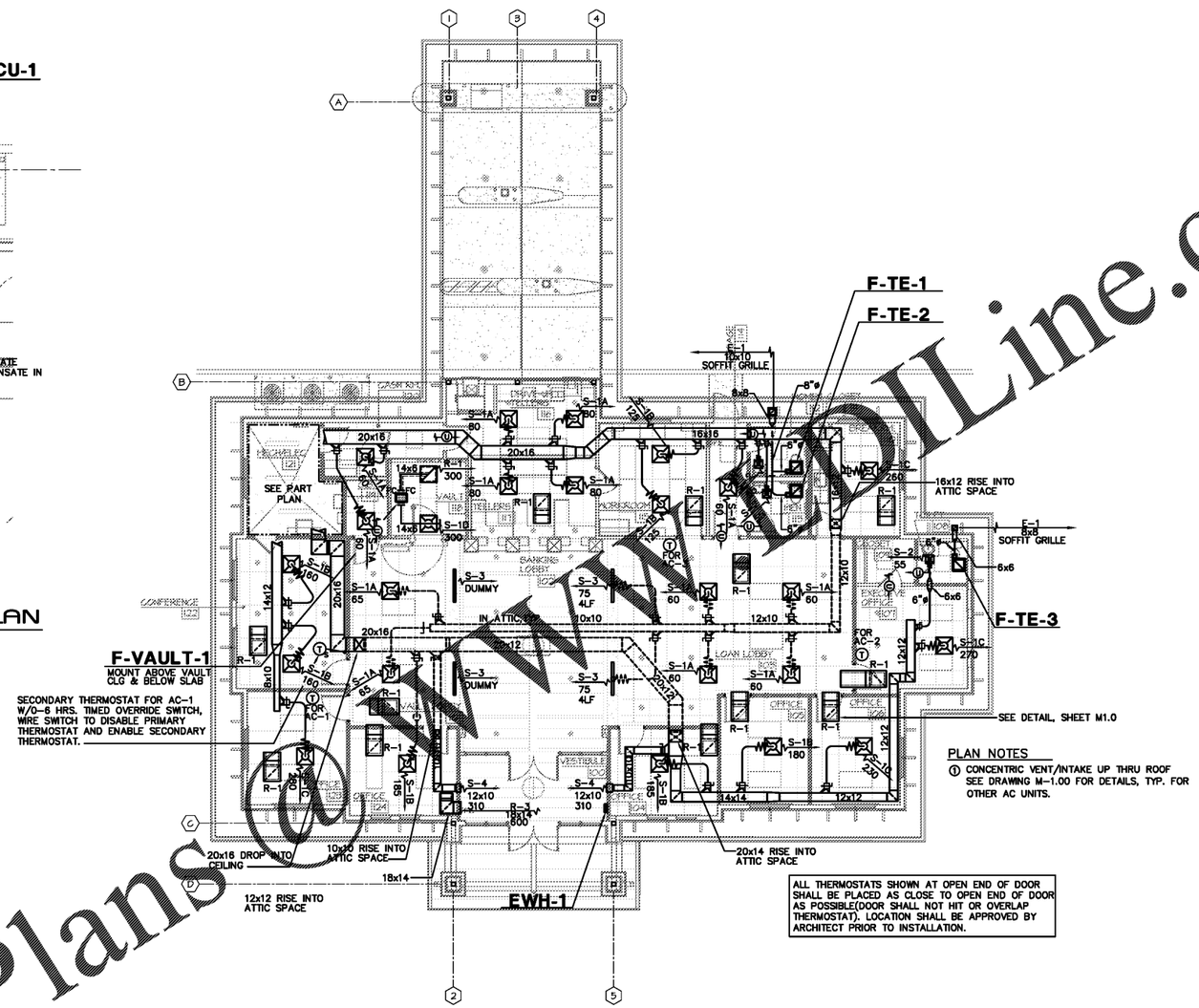

PLAN NOTES

① CONCENTRIC VENT/INTAKE UP THRU ROOF SEE DRAWING M-1.00 FOR DETAILS, TYP. FOR OTHER AC UNITS.

ALL THERMOSTATS SHOWN AT OPEN END OF DOOR SHALL BE PLACED AS CLOSE TO OPEN END OF DOOR AS POSSIBLE(DOOR SHALL NOT HIT OR OVERLAP THERMOSTAT). LOCATION SHALL BE APPROVED BY ARCHITECT PRIOR TO INSTALLATION.

HVAC FLOOR PLAN

SCALE: 1/8" = 1'-0"

NORTH

GENERAL NOTES

1. ROUTE REFRIGERANT LINES INTO BLDG. TO RESPECTIVE DX COIL, REFRIGERANT LINES SHALL BE SIZED BY EQUIPMENT MANUFACTURER, TYP. EACH UNIT.
2. MAINTAIN MINIMUM CLEARANCES PER MANUFACTURER'S RECOMMENDATIONS, TYP. ALL UNITS, ALL SIDES. UNLESS NOTED OTHERWISE. COORDINATE ACTUAL SITE LOCATIONS WITH ARCHITECT.
3. PROVIDE FLEXIBLE CONNECTORS ON INLET AND DISCHARGE OF EACH FAN & AIR HANDLER.
4. CAREFUL COORDINATION BETWEEN STRUCTURAL, PLUMBING, AND INTERIORS SHALL BE TAKEN SO THAT CONFLICTS DO NOT ARISE.
5. SEAL AIR TIGHT AROUND ALL DUCTS AND PIPING THROUGH ATTIC ABOVE, WALLS TO UNDERSIDE OF TRUSS OR THAT PENETRATE EXTERIOR FOR SOFFIT GRILLES. REFER TO ARCHITECTURAL DWG/SPEC. FOR WALLS EXTENDED TO STRUCTURE.
6. ALL ROOF PENETRATIONS AND ROOF ELEMENTS SHALL BE PAINTED TO MATCH ROOF COLOR.
7. PROVIDE FULL-SIZE INTERNALLY LINED RA PLENUM FOR ALL AC UNITS. PROVIDE FLEXIBLE CONNECTORS FOR RA AND OA CONNCETIONS TO PLENUM.
8. PROVIDE A MOD & VCD IN ALL OA BRANCH DUCTS TO AC UNITS.
9. PROVIDE AUXILIARY DRAIN PAN WITH FLOAT SWITCH WIRED TO SHUTDOWN UNIT FOR ALL AC UNITS.

Under Plans @ WWW.EDILine.com

HLH
H. LLOYD HILL ARCHITECTS & ASSOCIATES, INC.
736 GREEN STREET
GAINESVILLE, GA 30501
(770) 534-8404

A.I.A.

GEORGIA REGISTERED No. 18834 PROFESSIONAL ENGINEER JOHN E. MAYES

New Cornelia Branch
Southern Bank & Trust
Cornelia, Georgia

COPYRIGHT (C) 2019- H. LLOYD HILL ARCHITECTS AND ASSOCIATES, INC.

DATE	DESCRIPTION
04-09-2019	SCHEMATIC DESIGN DRAWINGS
04-30-2019	DESIGN DEVELOPMENT DRAWINGS

PROJ. NO: G1902
FILE NAME: .DWG
DRAWN BY: AR
SHEET TITLE: HVAC FLOOR PLAN
SHEET NUMBER: M1.1

BAA MECHANICAL ENGINEERS INC
500 Bishop Street Suite F-3 Atlanta, GA 30318 Ph: 404-355-0050 Fax: 404-355-1050