RUSKIN®

3900 Dr. Greaves Rd. • Kansas City, MO 64030 • (816) 761-7476 • FAX (816) 765-8955

INSTALLATION INSTRUCTIONS
1½ HOUR UL CLASSIFIED
CURTAIN TYPE FIRE DAMPERS
MODELS (D-)IBD2, IBDT, IBDT1, and IBDT2

APPLICATION

The fire damper models shown on this sheet are marked with a 1½ hour fire damper label and are approved for use in fire walls or floors with ratings of less than 3 hours. Fire Dampers require a field-or factory-installed sleeve. Select a sleeve of sufficient length to permit attachment, with perimeter mounting angles, to duct work on each side of wall or floor opening.

(All sizes apply to galvanized and stainless steel construction unless indicated otherwise)

DYNAMIC FIRE DAMPERS -- DIBD and DIBDX models

See label on damper for maximum air flow and pressure.

MODEL D-IBD2 MAXIMUM SIZE
Single Section
Vertical or Horizontal installation -- 33"w x 36"h (838 x 914).
Single Section
Out of Wall (vertical) installation -- 36"w x 48"h (914 x 1219)
Multiple Section Assembly
Vertical installation, galvanized steel construction -- 120"w x 72"h (3048 x 1829).
Vertical installation, stainless steel construction -- 99"w x 72"h (2515 x 1829).
Horizontal installation -- 114"w x 38"h or 90"w x 91"h (2896 x 965 or 2286 x 2301).

MODELS DIBDT, DIBDT1, AND DIBDT2 MAXIMUM SIZE
Single Section
Vertical installation -- 40"w x 48"h (1016 x 1219).
Single Section
Out of Wall (vertical) installation -- 36"w x 48"h (914 x 1219).

INSTALLATION SUPPLEMENTS

Refer to the appropriate Ruskin installation operation instructions supplements for special requirements.
• S-and-Drivemate No. 14680
• Ductmate
• Sealing of Dampers in Fire Rated Walls or Floors
• Picture Frame Mounting Angles
• Metal Stud Framing for Fire Dampers in Drywall Partitions
• Metal Stud Framing for Fire Dampers in Drywall Design No. U433
• Wood Stud Framing for Fire Dampers in Drywall Partitions

STATIC FIRE DAMPERS - IBD models

Not for use in dynamic (fans on) systems.

MODEL IBD2 MAXIMUM SIZE
Single Section
Vertical installation -- 48"w x 30"h or 33"w x 72"h (1219 x 762 or 838 x 1829).
Single Section
Out of Wall (vertical) installation -- 36"w x 48"h (914 x 1219).
Horizontal installation -- 33"w x 38"h or 30"w x 45½"h (838 x 965 or 762 x 1156).
Multiple Section Assembly
Vertical installation, galvanized steel construction -- 120"w x 72"h (3048 x 1829).
Vertical installation, stainless steel construction -- 99"w x 72"h (2515 x 1829).
Horizontal installation -- 114"w x 38"h or 90"w x 91"h (2896 x 965 or 2286 x 2301).

MODELS IBDT, IBDT1, AND IBDT2 MAXIMUM SIZE
Single Section
Vertical installation -- 40"w x 48"h (1016 x 1219).
Horizontal installation -- 60"w x 12"h (1524 x 305).
Single Section
Out of Wall (vertical) installation -- 36"w x 48"h (914 x 1219).

SEE DETAILS ON UL CLASSIFICATION MARKING ON ENCLOSED PRODUCT

California State Fire Marshal Listing No. 3225-245:005 (Vertical and Horizontal Mounting)

Note:
Dimensions shown in parentheses ( ) indicate millimeters.

ALL RUSKIN SPECIFICATIONS ARE SUBJECT TO CHANGE WITHOUT NOTICE OR OBLIGATION.

1. Expansion Clearance
Expansion clearance is required for all fire damper/sleeve assemblies. The opening in the wall or floor must be a minimum of ⅛" per foot (3 per 305) larger than the overall damper/sleeve assembly size for galvanized steel dampers and a minimum ¼" per foot (6 per 305) for stainless steel dampers. The maximum opening size is 2" (51) larger than the minimum clearance dimensions above. Example: Opening for a 36" x 24" damper/sleeve assembly can be 36⅜" x 24¼" minimum up to 38⅜" x 26¼" maximum. All openings must be at least ¼" (6) larger than the damper/sleeve assembly.

2. Fasteners and Multiple Section Assembly
Use No. 10 (M5) bolts or screws, 3/16" (5) rivets, tack welds or spot welds as depicted in figures 2 and 4 and spaced as follows when joining individual dampers to make multiple section damper assemblies or when fastening damper to the sleeve:
Vertical Mount (in wall)
Galvanized steel dampers 12" (305) spacing
Stainless steel dampers 6" (152) spacing
Horizontal Mount (in floor)
All dampers 6" (152) spacing
Multiple section horizontal mount dampers require a 14 gage thick x 4½" (2 x 114) wide steel mullion plate sandwiched between the damper frames with ½" (13) long welds staggered intermittently and spaced on maximum 6" (152) centers. The mullion plate must be the same material as the damper. The mullion length must be equal to the damper width of two or more adjoining damper sections. Mullions are not required for assemblies consisting of two dampers attached end-to-end or three dampers attached side-to-side as depicted in figure 5.

3. Out of Wall Installation and Fasteners
Dampers are designed to be installed within the wall. If out of wall installation is required the leading edge of the damper frame may be as much as 11" (279) from the wall but the sleeve shall not extend more than 16" (406) from the wall. If the damper is to be installed out of the wall, use the following methods. The fasteners shall be spaced 12" (305) o-to-c, minimum 1 per side.
a. In metal stud or wood stud walls in drywall partitions, use minimum #10 screws.
b. In U438 or U497 drywall construction use minimum #10 screws.
c. In masonry wall construction use #10 self-tapping concrete anchors.

4. Damper Sleeve
Damper sleeve must be minimum 26 gage (.6) up to a maximum 10 gage (3.5) steel. Sleeve thickness must be equal to or thicker than the duct connected to it. Sleeve gage requirements are listed in the SMACNA Fire, Smoke and Radiation Damper Installation Guide For HVAC Systems and in NFPA90A. If a break-away style duct/sleeve connection is not used, sleeves must be 16 gage (1.6) minimum for dampers up to 36" wide or 24" height and 14 gage (2) minimum when damper exceeds 36" wide or 24" high. Sleeve must be fastened to damper as described in (note 2). Sleeve must not extend more than 6" (152) out of the wall or floor. Exception -- Dampers equipped with factory installed access door may extend 16" (406) out of the wall or floor on the access door side. Sleeves must terminate on both sides of the wall or floor within the dimension shown in figures 1 and 3.

5. Insulation for Out of Wall
For dampers out of the wall, fiberfrax insulation and fire rated gypsum wallboard shall be applied to the top and sides of the sleeve. The fiberfrax insulation shall be minimum 1/4" (6) thick and glued (with rubber cement) to top and both sides of sleeve. The fiberfrax shall extend through the wall opening and terminate at the damper frame edge closest to the wall. The fire rated gypsum wallboard shall be a minimum 1/2" (13) thick and shall cover the fiberfrax insulation except it shall not extend through the wall opening. The wallboard shall be attached to the damper sleeve using 2 rows of #6 sheet rock screws spaced a maximum 12" (305) o-to-c. A minimum of 2 screws per row, per side is required. Each row shall be a maximum 2" (51) from the edge of the wallboard.

5. Damper Orientation
Use "Air Flow" and "Mount with Arrow Up" labels on Dynamic DIBD and DIBDX models for proper damper orientation. For Static IBD models use only "Mount With Arrow Up" label on damper for proper damper orientation.

7. Mounting Angles
Ruskin Picture Frame Mounting Angles can be used as shown in the supplemental installation instructions in lieu of the following conventional mounting angles.
Galvanized dampers 50" x 60" or 60" x 50" (1270 x 1524 or 1524 x 1270) or smaller require minimum of 1¼" x 1¼" x 20 gage (32 x 32 x 1.0) conventional mounting angles fastened to the damper sleeve with No. 10 (M5) bolts or screws, 3/16" (5) rivets, tack welds or spot welds as depicted in figures 1 and 3, spaced a maximum of 6" (152) on center.
Larger dampers require minimum 1½" x 1½" x 20 gage (38 x 38 x 1.0) conventional mounting angles fastened to damper sleeve with No. 10 (M5) bolts or screws, 3/16" (5) rivets, tack welds or spot welds as depicted in figures 1 and 3 and spaced as follows:
Galvanized steel dampers 12" (305) spacing
Stainless steel dampers 6" (152) spacing
Mounting angles must overlap the wall or floor a minimum of 1" (25). Do not fasten angles together at corners of the damper/sleeve assembly.

6. Duct/Sleeve Connections
a. Break-away Duct/Sleeve Connections
Rectangular ducts must use one or more of the connections depicted below:
A maximum of two #10 sheet metal screws on each side and

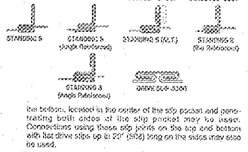

the bottom, located in the center of the slip pocket and penetrating both sides of the slip pocket may be used. Connections using these slip joints on the top and bottom with flat drive slips up to 20" (508) long on the sides may also be used.

b. Round and Oval Break-away Connections
Round and flat oval break-away connections must use either a 4" (102) wide drawband or #10 sheet metal screws spaced equally around the circumference of the duct as follows:
• Duct diameters 22" (559) and smaller -- Maximum 3 screws.
• Duct diameters over 22" (559) and including 36" (914) -- Maximum 5 screws.
• Duct diameters over 36" (914) and up to and including 191" (4851) total perimeter -- Maximum 8 screws. For flat oval ducts, the diameter is considered the largest (major) dimension of the duct.
Note: When optional sealing of these joints is desired, the following sealants may be applied in accordance with the sealant manufacturer's instructions:
Hardcast, Inc. -- Iron Grip 601 Eco Duct Seal 44-52
Precision -- PA2084T

c. Flanged Break-away Style Duct Sleeve Connections.
Flanged connection systems manufactured by Ductmate, Nexus or Ward are approved break-away connections when installed as depicted.
TDC (by Lockformer) and TDF (by Engle) flanged connections are approved break-away connections when installed per the flange manufacturer's instructions.

d. Non-Break-away Duct/Sleeve Connections
If other duct sleeve connections are used, the sleeve shall be a minimum of 16 gage (1.6) for dampers up to 36" (914) wide x 24" (610) high and 14 gage (2.0) for dampers exceeding 36" (914) wide x 24" (610) high.

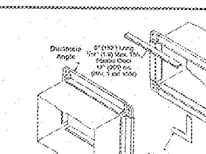

9. Installation and Maintenance
To ensure optimum operation and performance, the damper must be installed so it is square and free from racking. Do not compress or stretch the damper frame into the duct or opening. Lift or handle the damper using sleeve or frame. Do not lift damper using blades. Each fire damper should be exercised on a regular basis to ensure it is not rusted or blocked, or in accordance with NFPA recommendations. Care should be exercised to ensure that such tests are performed safely and do not cause system damage.

VERTICAL INSTALLATION

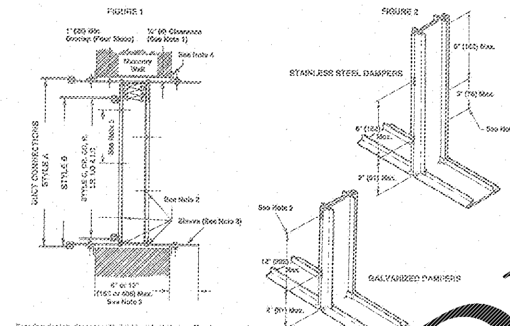

Drawing depicts damper with field installed sleeve. For dampers with factory installed sleeve, see (D)IBD20, 40, 60 installation instructions.

HORIZONTAL INSTALLATION

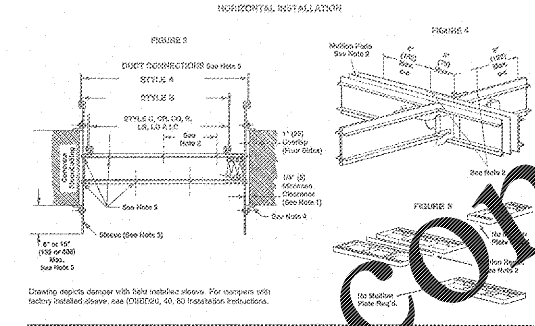

Drawing depicts damper with field installed sleeve. For dampers with factory installed sleeve, see (D)IBD20, 40, 60 installation instructions.

(D-)IBD, IBDT, IBDT1, IBD2 OUT OF THE WALL

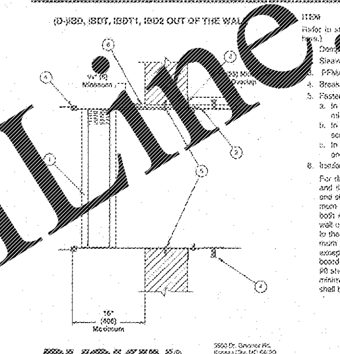

ITEM DESCRIPTION
(Refer to standard installation instructions for items not covered here.)
1. Damper
2. Sleeve
3. PFMA or conventional Mounting Angles
4. Breakaway sleeve to duct connection.
5. Fasteners -- 12" (305) o-to-c, minimum 1 per side:
a. In metal stud or wood stud walls in drywall partitions, use minimum #10 screws.
b. In U438 or U497 drywall construction use minimum #10 screws.
c. In masonry wall construction use #10 self tapping concrete anchors.
6. Insulation for Out of Wall
For dampers with blades out of the wall fiberfrax insulation and fire rated gypsum wallboard shall be applied to the top and sides of the sleeve. The fiberfrax insulation shall be minimum 1/4" (6) thick and glued (with rubber cement) to top and both sides of sleeve. The fiberfrax shall extend through the wall opening and terminate at the damper frame edge closest to the wall. The fire rated gypsum wallboard shall be a minimum 1/2" (13) thick and shall cover the fiberfrax insulation except it shall not extend through the wall opening. The wallboard shall be attached to the damper sleeve using 2 rows of #6 sheet rock screws spaced a maximum 12" (305) o-to-c. A minimum of 2 screws per row, per side is required. Each row shall be a maximum 2" (51) from the edge of the wallboard.

RUSKIN® 3900 Dr. Greaves Rd. Kansas City, MO 64030 (816) 761-7476 FAX (816) 765-8955 www.ruskin.com

System No. CAJ1001
(Formerly System No. 49)
F Rating—3 Hr
T Rating—0 Hr

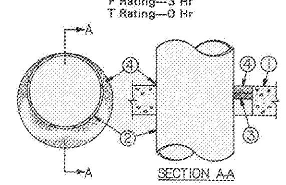

1. Floor or Wall Assembly—Min 4-1/2 in. thick lightweight or normal weight (100-150 pcf) concrete. Wall may also be constructed of any UL Classified Concrete Blocks*. Max diam of circular through opening is 22-1/2 in.
See Concrete Blocks (CAZT) category in the Fire Resistance Directory for names of manufacturers.
1A. Steel Sleeve—(Optional, not shown)—Nom 12 in. diam (or smaller) Schedule 40 (or heavier) steel pipe sleeve cast into concrete floor or wall. Sleeve to be flush with or extend max 2 in. from top surface of floor or from both surfaces of wall.
2. Pipe or Conduit—Nom 20 in. diam (or smaller) Schedule 10 (or heavier) steel pipe, nom 6 in. diam (or smaller) rigid steel conduit or Type L (or heavier) copper tube, nom 4 in. diam (or smaller) cast iron pipe or steel conduit. Max one pipe or conduit per through opening. Max annular space between pipe or conduit and edge of through opening not to exceed 2-1/2 in. Min annular space between pipe or conduit and edge of through opening is zero in. (point contact). Pipe or conduit to be rigidly supported on both sides of floor or wall assembly.
3. Packing Material—Polyethylene backer rod or nom 1 in. thickness of tightly-packed ceramic (alumina silica) fiber blanket, mineral-wool batt or glass fiber insulation material used as a permanent form. Packing material to be recessed from top surface of floor or from both surfaces of wall as required to accommodate the required thickness of caulk fill material (Item 4). As an alternate when max pipe size is 10 in. diam and when max annular space is 1 in., a min 1 in. thickness of tightly-packed ceramic fiber blanket or mineral-wool batt packing material may be recessed min 1 in. from bottom surface of floor or from either side of wall.
4. Fill, Void or Cavity Materials*—Caulk—Applied to fill the annular space to the min thickness shown in the following table:

Max Pipe Diam In	Annular Space In	Packing Material Type (a)	Min Caulk Thkns In
[illegible]	1	BR, CF, GF or MW	1/2 (b)
10	1	CF or MW	1/2 (c)
20	2-1/2	BR, CF, GF or MW	1 (b)

(a) BR—Polyethylene backer rod.
CF—Ceramic fiber blanket.
GF—Glass fiber insulation.
MW—Mineral-wool batt.
(b) Caulk installed flush with top surface of floor or both surfaces of wall
(c) Caulk installed flush with bottom surface of floor or one surface of wall
Minnesota Mining & Mfg. Co.—Type CP 25N/S
*Bearing the UL Classification Marking

3M Fire Protection Products — This material was extracted by 3M Fire Protection Products from the 1996 edition of the UL Fire Resistance Directory.
86

FILE NAME = XHEZ.C-AJ-1001
COPYRIGHT 2004 UNDERWRITERS LABORATORIES, INC.
REPRINTED FROM THE UL ONLINE CERTIFICATIONS DIRECTORY WITH PERMISSION FROM UNDERWRITERS LABORATORIES INC.

System No. CAJ5001
(Formerly System No. 91)
F Ratings—1, 2 and 3 Hr (See Item 4)
T Ratings—0, 1/2, 3/4 and 1 Hr (See Items 1A and 4)
L Rating At Ambient—2 CFM per sq ft
L Rating At 400 F—less than 1 CFM per sq ft

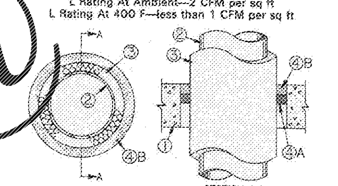

1. Floor or Wall Assembly—Min 2-1/2 in. thick reinforced lightweight or normal weight (100-150) pcf concrete. Wall may also be constructed of any UL Classified Concrete Blocks*. Max diam of opening is 18 in.
See Concrete Blocks (CAZT) category in the Fire Resistance Directory for names of manufacturers.
1A. Steel Sleeve—(Optional, not shown)—Nom 8 in. (or smaller) Schedule 10 (or heavier) steel sleeve cast or grouted into floor or wall assembly. Sleeve may extend a max of 2 in. above top of floor or beyond either surface of wall. Sleeve may be used only when floor or wall assembly is min 4-1/2 in. thick. T Rating is 0 Hr when sleeve is used.
2. Through Penetrant—Nom 4 in. diam (or smaller) Type L (or heavier) copper pipe, nom 12 in. diam (or smaller) service weight (or heavier) cast iron soil pipe, nom 12 in. diam (or smaller) Class 50 (or heavier) ductile iron pressure pipe or nom 12 in. diam (or smaller) Schedule 10 (or heavier) steel pipe centered in the opening and rigidly supported on both sides of the floor or wall assembly.
3. Pipe Covering*—Nom 1 or 2 in. thick hollow cylindrical heavy density (min. 3.5 pcf) glass fiber units jacketed on the outside with an all service jacket. Longitudinal joints sealed with metal fasteners or factory-applied self-sealing lap tape. Transverse joints secured with metal fasteners or with butt strip tape supplied with the product.
See Pipe and Equipment Covering—Materials*(BRGU) category in Building Materials Directory for names of manufacturers. Any pipe covering material meeting the above specifications and bearing the UL Classification Marking with a Flame Spread Index of 25 or less and a Smoke Developed Index of 50 or less may be used.
4. Firestop System—The details of the firestop system shall be as follows:
A. Packing Material—Min 1 in. thickness of firmly packed mineral wool batt insulation used as a permanent form. Packing material to be recessed from top surface of floor or sleeve or from both surfaces of wall as required to accommodate the required thickness of caulk fill material (Item B).
B. Fill, Void or Cavity Material*—Caulk—Applied to fill the annular space flush with the top surface of the floor or sleeve or flush with both surfaces of wall. When nom pipe covering thickness is 2 in., min thickness of caulk fill material is 2 in. When nom pipe covering thickness is 1 in., min thickness of caulk fill material is 1 in. The hourly F and T Ratings of the firestop system are dependent upon the thickness of the floor or wall, the size of pipe, the thickness of pipe covering material and the size of the annular space (between the pipe covering material and the edge of the circular through opening), as shown in the following table:

Min Floor Or Wall Thkns In.	Max Pipe Diam In.	Nom Pipe Covering Thkns In.	Annular Space In.	F Rating Hr	T Rating Hr
2-1/2	4	1	1/2 to 2-3/8	2	1
4-1/2	4	2	1/4 to 3-5/8	2	1-1/2
2-1/2	12	1	1/2 to 1-1/2	3	1/2
4-1/2	12	1	1/2 to 2-3/8	3	1

Minnesota Mining & Mfg. Co.—CP 25WB+.
*Bearing the UL Classification Marking

3M Fire Protection Products — This material was extracted by 3M Fire Protection Products from the 1996 edition of the UL Fire Resistance Directory.
160

FILE NAME = XHEZ.C-AJ-5001
COPYRIGHT 2004 UNDERWRITERS LABORATORIES, INC.
REPRINTED FROM THE UL ONLINE CERTIFICATIONS DIRECTORY WITH PERMISSION FROM UNDERWRITERS LABORATORIES INC.

NOTE:
DETAILS ARE FOR REFERENCE ONLY. DAMPERS TO BE INSTALLED PER MANUFACTURER'S U.L. APPROVED INSTALLATION INSTRUCTIONS FOR THE DAMPER FURNISHED. DAMPERS TO BE BY RUSKIN, PREFCO, SAFE AIR, NATIONAL CONTROLLED AIR, UNITED AIR, OR NAILOR. FIRESTOPPING PRODUCTS TO BE BY 3M, DOW CORNING, OR CERTAINTEED.

NOTE:
INSTALL FIRE DAMPER IN ACCORDANCE WITH THE MANUFACTURER'S INSTALLATION DETAILS. DO NOT VARY FROM THOSE INSTRUCTIONS IN ANY WAY. DO NOT FIRESTOP THE GAP BETWEEN THE FIRE DAMPER SLEEVE AND THE PENETRATION UNLESS SPECIFICALLY REQUIRED BY THE DAMPER MANUFACTURER'S INSTALLATION INSTRUCTIONS.

NOTE:
REPRINTED FROM THE 2004 FIRE RESISTANCE DIRECTORY WITH PERMISSION FROM UNDERWRITER'S LABORATORIES INC.
COPYRIGHT 2004 UNDERWRITER'S LABORATORIES INC.

NOTE:
THIS TYPICAL FIRE/SMOKE DAMPER DETAIL IS GENERIC GUIDANCE ONLY. INSTALL FIRE/SMOKE DAMPER IN ACCORDANCE WITH THE MANUFACTURER'S INSTALLATION DETAILS. DO NOT VARY FROM THOSE INSTRUCTIONS IN ANY WAY. DO NOT FIRESTOP THE GAP BETWEEN THE FIRE/SMOKE DAMPER SLEEVE AND THE PENETRATION UNLESS SPECIFICALLY REQUIRED BY THE MANUFACTURER'S INSTALLATION INSTRUCTIONS.

Order Plans @ WWW.LDIILine.com

cra
222 cloister court
chapel hill, nc 27514
919.401.8586
www.cra-ae.com

RN&M ENGINEERS
Reece, Noland & McElrath, Inc.
94 Main Street
Canton, North Carolina 28716

NORTH CAROLINA PROFESSIONAL ENGINEER SEAL 024539 7-22-19 MARK R. McDOWELL

Renovation of
920 Corporate Drive
Orange County Schools
920 Corporate Drive
Hillsborough, North Carolina

no. revisions

drawn DJM checked MRM

U.L. DETAILS

sheet
M0.3

project no. 2019016.00

date 7.22.19

Construction Document Bid Set