DEMOLITION NOTES:
(THIS SHEET ONLY)

1. THIS PANEL IS EXISTING TO BE RELOCATED.
2. SEE NEW WORK RISER FOR RECONNECTION.

NOTES:
(THIS SHEET ONLY)

1. REFEED FROM EXISTING PANEL. PROVIDE A 150A/3P BREAKER AND ROUTE 3#1/0,#6;2"C. ASSUME 40' FEEDER LENGTH.
2. REFEED FROM EXISTING PANEL IN NEW LOCATION. SEE FLOOR PLAN FOR NEW LOCATION. PROVIDE A 150A/3P BREAKER AND ROUTE 3#1/0,#6;2"C. INTERCEPT EXISTING CONDUCTORS AND MAKE SPLICE AS REQUIRED.

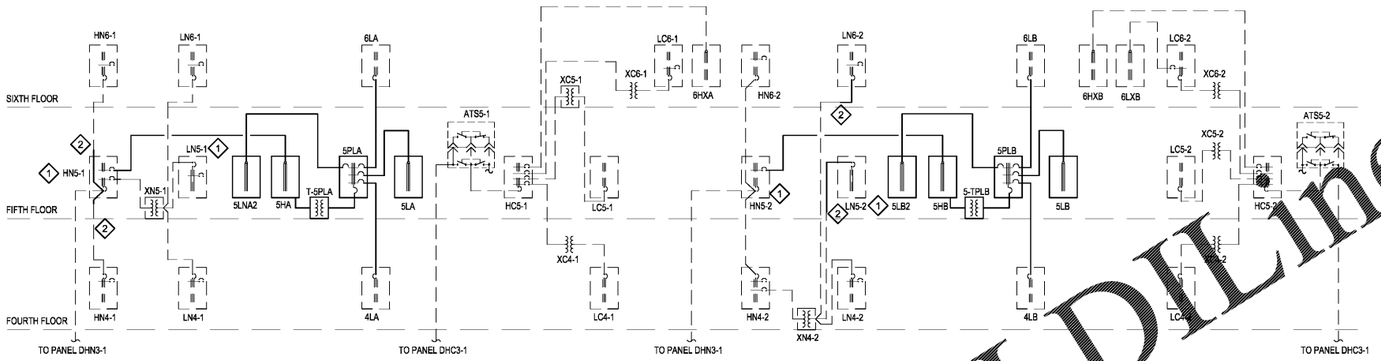

DEMOLITION RISER DIAGRAM
SCALE: NONE

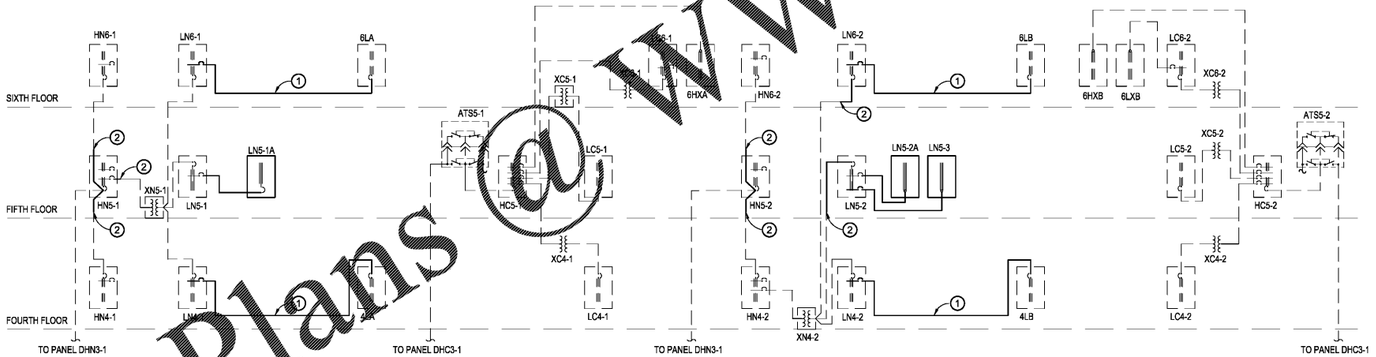

NEW WORK RISER DIAGRAM
SCALE: NONE

Order Plans @ WWW.LDILine.com

Revisions:	Date:

CONSULTANT

CLARKNEXSEN
440 Martin Luther King Jr. Blvd
Macon, GA 31201
478.743.8415 Fax: 478.743.8239
www.clarknexsen.com

ARCHITECT/ENGINEER OF RECORD

TOLAND MIZELL MOLNAR
590 MEANS STREET NW
STE. 200
ATLANTA, GA 30318

STAMP

GEORGIA REGISTERED NO. 043850 PROFESSIONAL ENGINEER MATTHEW SAMSON

Office of Construction and Facilities Management

VA U.S. Department of Veterans Affairs

Drawing Title	Phase	Project Title	Project Number
RISER DIAGRAMS	FINAL SUBMITTAL	RENOVATE GERIATRIC-MED-PSYCH INPATIENT 5TH FLOOR	508-17-101
Approved: Project Director	FULLY SPRINKLERED	Location: Atlanta VA Medical Center - Atlanta, Ga.	Building Number: Bldg C: Main Tower
		Issue Date: 06-07-2019 / Checked: PEW / Drawn: TWG	Drawing Number: E701

I:\PROJECTS\7000\7491-TMM VA ATLANTA RENOVATE GERIATRIC MED\7491-TMM VA ATLANTA RENOVATE GERIATRIC MED\CONSTRUCTS\GX-TBLK.DWG

VA FORM 08 - 6231