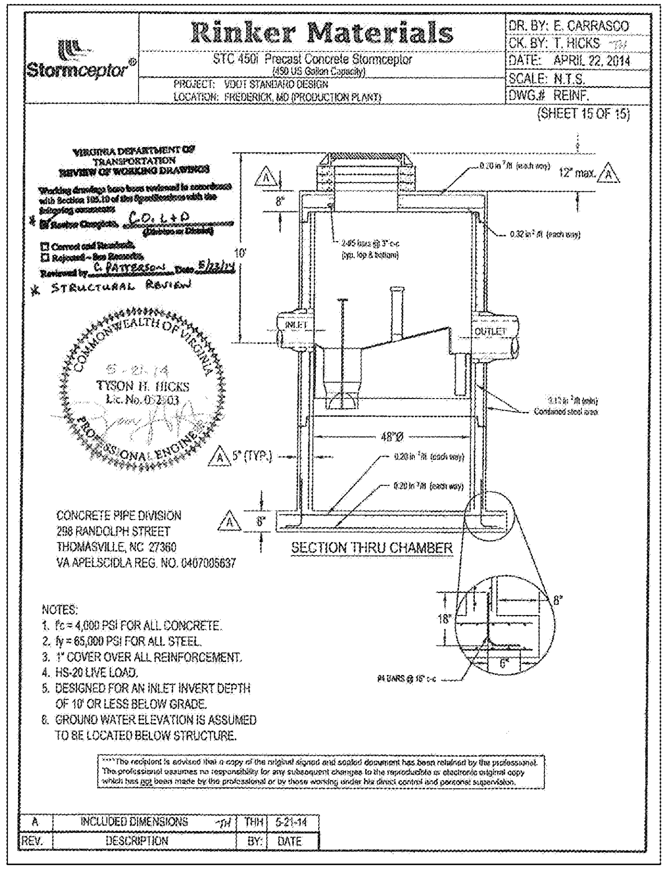

7 STORMCEPTOR
Scale: NTS

COMMONWEALTH of VIRGINIA

DEPARTMENT OF TRANSPORTATION
1401 EAST BROAD STREET
RICHMOND, VIRGINIA 23219-2000

Charles A. Kilpatrick, P.E.
Commissioner

May 23, 2014

Aimee J. Connerton
Technical Promotions
Rinker Materials

Dear Ms. Connerton:

This office has completed our review of the shop drawings for the Precast Stormceptor 450i and 900. The structural designs appear to be adequate and should be acceptable for use on projects within the Commonwealth of Virginia, provided that individual job requirements are met. Note that the review of the hydraulic capacity and water quality functions of both devices must be evaluated by the District Hydraulics staff on a project specific basis. Therefore, the drawings have been appropriately stamped "Review Completed".

The review of these drawings is in accordance with section 105.10 and 302.03 of the 2007 Road and Bridge Specifications. Approval by the Department for the use of precast units is permissive only. The contractor shall ensure that the precast unit, as installed at each specific location, will posses the specified structural, aesthetic, and service ability characteristics of the device specified in the contract documents.

If you have any questions regarding this review, please feel free to contact me at (804) 786-1805.

Sincerely,

Charles Patterson, P.E.
Standards & Special Design
Location and Design Division

VirginiaDOT.org
WE KEEP VIRGINIA MOVING

8 VDOT APPROVAL OF STORMCEPTOR
Scale: NTS

Stormceptor® Rinker Materials

Brief Stormceptor Sizing Report - Wawa Sudley Road

Project Information & Location			
Project Name	Wawa Sudley Road	Project Number	7673
City	Manassas	State/ Province	Virginia
Country	United States of America	Date	6/5/2018
Designer Information		EOR Information (optional)	
Name	Aimee Connerton	Name	Jessica Murray
Company	Rinker	Company	Kimley Horn
Phone #	301-357-0324	Phone #	703-870-3639
Email	aimeej.connerton@rinkerpipe.com	Email	jessica.murray@kimley-horn.com

Stormwater Treatment Recommendation
The recommended Stormceptor Model(s) which achieve or exceed the user defined water quality objective for each site within the project are listed in the below Sizing Summary table.

Site Name	Wawa Sudley Road
Target TSS Removal (%)	80
TSS Removal (%) Provided	84
Recommended Stormceptor Model	STC 450i

The recommended Stormceptor Model achieves the water quality objectives based on the selected inputs, historical rainfall records and selected particle size distribution.

Stormceptor Sizing Summary	
Stormceptor Model	% TSS Removal Provided
STC 450i	84
STC 900	90
STC 1200	90
STC 1800	91
STC 2400	93
STC 3600	93
STC 4800	95
STC 6000	95
STC 7200	96
STC 11000	97
STC 13000	98
STC 16000	98
StormceptorMAX	Custom

Stormceptor Brief Sizing Report – Page 1 of 2

9 STORMCEPTOR REPORT PG 1
Scale: NTS

Stormceptor® Rinker Materials

Sizing Details			
Drainage Area		Water Quality Objective	
Total Area (acres)	0.35	TSS Removal (%)	80.0
Imperviousness %	100.0	Runoff Volume Capture (%)	
Rainfall		Oil Spill Capture Volume (Gal)	
Station Name	WASHINGTON REAGAN NATL	Peak Conveyed Flow Rate (CFS)	29.00
State/Province	Virginia	Water Quality Flow Rate (CFS)	1.25
Station ID #	8906	Up Stream Storage	
Years of Records	58	Storage (ac-ft)	Discharge (cfs)
Latitude	38°50'54"N	0.000	0.000
Longitude	77°2'3"W	Up Stream Flow Diversion	
		Max. Flow to Stormceptor (cfs)	0.00000

Particle Size Distribution (PSD) The selected PSD defines TSS removal		
Fine Distribution		
Particle Diameter (microns)	Distribution %	Specific Gravity
20.0	20.0	1.30
60.0	20.0	1.80
150.0	20.0	2.20
400.0	20.0	2.65
2000.0	20.0	2.65

Notes
- Stormceptor performance estimates are based on simulations using PCSWMM for Stormceptor, which uses the EPA Rainfall and Runoff modules.
- Design estimates listed are only representative of specific project requirements based on total suspended solids (TSS) removal defined by the selected PSD, and based on stable site conditions only, after construction is completed.
- For submerged applications or sites specific to spill control, please contact your local Stormceptor representative for further design assistance.

For Stormceptor Specifications and Drawings Please Visit:
http://www.imbriumsystems.com/technical-specifications

10 STORMCEPTOR REPORT PG 2
Scale: NTS

Z886 Perma-Trench HDPE 6" Drain System

4

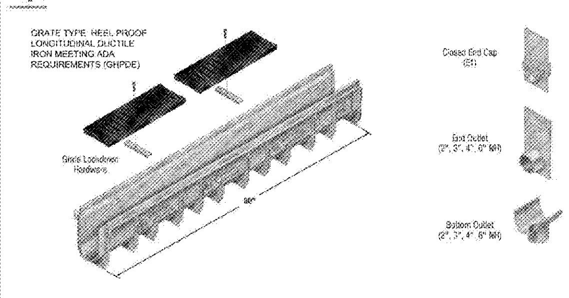

Z886 Dimensional Data									
Trench Number	Shallow Invert Inches	Shallow Invert mm	Deep Invert Inches	Deep Invert mm	Max. Flow Rate GPM	Max. Flow Rate LPS	Max. Flow Rate CFS	Approx. Weight (Less Grate) Lbs.	Approx. Weight (Less Grate) Kg
8601	3.50	89	4.10	104	83	5	[illegible]	14	6.2
8602	4.10	104	4.70	119	122	8	0.272	15	6.8
8603	4.70	119	5.30	135	152	10	0.339	16	7.4
8603N	5.30	135	5.30	135	–	–	–	17	7.7
8604	5.30	135	5.90	150	183	12	0.408	18	8.3
8605	5.90	150	6.50	165	214	14	0.477	20	8.9
8606	6.50	165	7.10	180	245	15	0.546	21	9.5
8606N	7.10	180	7.10	180	–	–	–	22	10.0
8607	7.10	180	7.70	196	276	17	0.615	23	10.6
8608	7.70	196	8.30	211	308	19	0.686	25	11.2
8609	8.30	211	8.90	226	339	21	0.755	26	11.8
8610	8.90	226	9.50	241	371	23	0.827	27	12.3
8611	9.50	241	10.10	257	403	25	0.898	29	13.0
8612	10.10	257	10.70	272	435	27	0.969	30	13.6
8612N	10.70	272	10.70	272	–	–	–	30	13.6
8613	10.70	272	11.30	287	467	29	1.041	31	14.2
8614	11.30	287	11.90	302	498	32	1.110	33	14.8
8615	11.90	302	12.50	318	530	34	1.181	34	15.4

Z886 System Profile

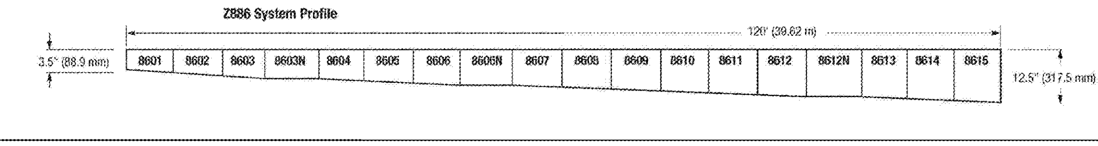

Z886 Applications

Highways, Driveways, Kitchens, Pools, Parking Lots, Gas Stations, Airports, Airplane Hangars, Industrial Parks, Chemical Plants, Food Processing, Shopping Malls, Industrial Plants, Pharmaceuticals, Amusement Parks

Installation Specification

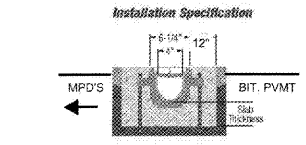

Features and Benefits

- *80" Modular Channel Sections with 20" Grates*
- *.75% Built-In Slope – Handles greater flows, uniform slope.*
- *Radiused Bottom – Better flow rate, less solids build-up.*
- *Smooth High Density Polyethylene Structural Composite interior – 0% water absorption.*
- *Durable and Lightweight – Strong corrosion-resistant material.*
- *Extra Long Runs – Sidewall extensions allow pre-slope runs longer than 120 feet.*
- *Variety of Gratings*
- *Grate Options – Available in H-20, FAA, ADA. See pages 22-23.*

GRATE TYPE: HEEL PROOF LONGITUDINAL DUCTILE IRON MEETING ADA REQUIREMENTS (GHPDE)

5

Z886 System Highlights

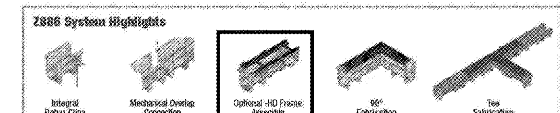

Engineering Specification Channels shall be 80" long, 6" wide, and have a 4" wide throat. Modular channel sections shall be made of High Density Polyethylene (HDPE), have interlocking ends, and radiused bottom. Channel shall be provided either flat (neutral) or with a .75% built-in slope. Channels shall be available with inverts ranging from 3.5" to 12.50". Channels shall have clips molded into the sides of the channel to accommodate vertical rebar for positioning and anchoring purposes. Choice of class A, B, C, D, E, and F grates shall be available with H-20 and/or FAA load ratings and/or ADA compliance with mechanical lockdown devices. End caps and catch basins shall be available to complement the channels and grates. End outlets, bottom outlets, and side outlets shall be available in 2", 3", 4", and 6" diameters. Trench drain shall be Flo-Thru model Z886.

11 TRENCH DRAIN DETAIL
Scale: NTS

No.	REVISIONS	DATE	BY
1	PWC COMMENTS – 1ST ROUND	09/10/2018	CAH
2	PWC COMMENTS – 2ND ROUND	11/02/2018	CAH
3	PWC COMMENTS – SIGNATURE SET	02/06/2019	CAH
4	UTILITY REVISIONS	07/25/2019	CMH

Kimley»Horn
© 2018 KIMLEY-HORN AND ASSOCIATES, INC.
11400 COMMERCE PARK DR., SUITE 400, RESTON, VA 20191
PHONE: 703-674-1300 FAX: 703-674-1350
WWW.KIMLEY-HORN.COM

COMMONWEALTH OF VIRGINIA
ROSS STEVENS
Lic. No. 047498
02/06/2019
PROFESSIONAL ENGINEER

KHA PROJECT 110499001
DATE 02/06/2019
SCALE AS SHOWN
DESIGNED BY JLM
DRAWN BY JLM
CHECKED BY RSS

DRAINAGE DETAILS

WAWA - SUDLEY ROAD
PREPARED FOR
FRONTIER DEVELOPMENT
PRINCE WILLIAM COUNTY VA

SHEET NUMBER
C-451

Order Plans @ WWW.LDILine.com