## UL DESIGN X526

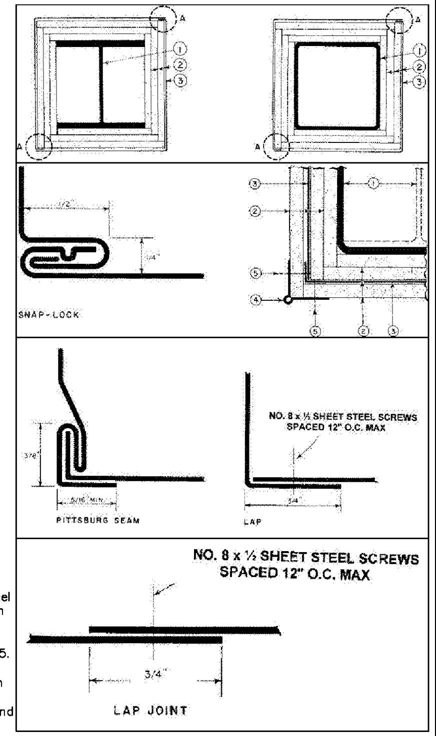


Design No. X526

June 06, 2016

Ratings —1, 2, 3 and 4 Hr.
* Indicates such products shall bear the UL or cUL Certification Mark for jurisdictions employing the UL or cUL Certification (such as Canada), respectively.
1. Steel Column —Min sizes of W shape and tubular steel columns in the AISC Steel Construction Manual as shown under Item 2.
2. Gypsum Board ——Any 1/2 in. thick UL Classified Gypsum Board that is eligible for use in Design No. X515. Any 5/8 in. thick UL Classified Gypsum Board that is eligible for use in Design Nos. L501, G512 or U305. Nom 5/8 in. thick or 1/2 in. thick gypsum board. Min total thicknesses of layers in inches for the various ratings and min column sizes are as follows:

| W Shape Columns | | | | | | | | |
|---|---|---|---|---|---|---|---|---|
| | Min. Column Size | | | | Rating Hr. | | | |
| | | | | | Total Thkns of Layers of Wallboard In. | | | |
| Dsg | Outside Dimensions In. | Flange Thkns In. | Web Thkns In. | In. Area | 1 | 2 | 3 | 4 |
| W4x13 | 4−1/8x4 | 0.345 | 0.280 | 3.82 | 1 | 1−1/2 | 2−1/4 | – |
| W6x15.5 | 6x6 | 0.269 | 0.235 | 4.56 | 1 | 1−1/2 | 2−1/4 | 3−1/8 |
| W10x49 | 10x10 | 0.558 | 0.340 | 14.4 | 1/2 | 1−1/8 | 1−7/8 | 2−1/2 |

| Tubular Shape Columns | | | | | | | |
|---|---|---|---|---|---|---|---|
| | Min. Column Size | | | Rating Hr. | | | |
| | | | | Total Thkns of Layers of Wallboard In. | | | |
| Dsg | Outside Dimensions In. | Flange Thkns In. | In. Area | 1 | 2 | 3 | 4 |
| TS4x4x0.188 | 4x4 | 0.188 | 2.74 | 1 | 1−3/4 | 2−5/8 | – |
| TS4.5x4.5x0.250 | 4.5x4.5 | 0.250 | 3.84 | 5/8 | | | |
| TS8x8x0.250 | 8x8 | 0.250 | 7.48 | 5/8 | 1−1/2 | 2−1/2 | – |

Applied in layers as shown in above illustration. Each layer held together with paper masking adhesive tape during erection to allow placement of succeeding layers.
For column ratings of 2 hr or less, one layer of gypsum board may be applied to the outer surface of steel cover. Boards applied vertically, without horizontal joints, attached to cover with screws located 1 in. from the board edge and 8 in. OC.
ACADIA DRYWALL SUPPLIES LTD (View Classification) —CKNX.R25370
AMERICAN GYPSUM CO (View Classification) —CKNX.R14196
BEIJING NEW BUILDING MATERIALS PUBLIC LTD CO (View Classification) —CKNX.R19374
CERTAINTEED GYPSUM INC (View Classification) —CKNX.R3660
CGC INC (View Classification) —CKNX.R19751
CONTINENTAL BUILDING PRODUCTS OPERATING CO, L L C (View Classification) —CKNX.R18482
GEORGIA—PACIFIC GYPSUM L L C (View Classification) —CKNX.R2717
LOADMASTER SYSTEMS INC (View Classification) —CKNX.R11809
NATIONAL GYPSUM CO (View Classification) ——eXP—C, CKNX.R3501
PABCO BUILDING PRODUCTS L L C, DBA PABCO GYPSUM (View Classification) —CKNX.R[illegible]94
PANEL REY S A (View Classification) —CKNX.R21796
SIAM GYPSUM INDUSTRY (SARABURI) CO LTD (View Classification) —CKNX.R[illegible]262
THAI GYPSUM PRODUCTS PCL (View Classification) —CKNX.R27517
UNITED STATES GYPSUM CO (View Classification) —CKNX.R1319
USG MEXICO S A DE C V (View Classification) —CKNX.R16089
2A. Gypsum Board* —As an alternate to Item 2, 3/4 in. thick applied as described in Item 2.
CGC INC —Type IP—X3 or ULTRACODE
UNITED STATES GYPSUM CO —Type IP—X3 or ULTRACODE
USG BORAL ZAWAWI DRYWALL L L C SFZ —Type ULTRACODE
USG MEXICO S A DE C V —Type IP—X3 or ULTRACODE
2B. Gypsum Board* —(As an alternate to Items 2 and 2A) —Nominal 5/8 in. thick panels. One of the layers of Gypsum Board (Item 2) used to obtain the minimum required thickness in Item 2 may be substituted with one layer and secured as described in Item 2.
PABCO BUILDING PRODUCTS L L C, DBA PABCO GYPSUM —Type QuietRock ES
2C. Wall and Partition Facings and Accessories* —(As an alternate to Items 2 through 2B) —Composite Gypsum Panel —Nominal 5/8 in. thick panels. One of the layers of Gypsum Board (Item 2) used to obtain the minimum required thickness in Item 2 may be substituted with one layer of composite gypsum panel and secured as described in Item 2.
PABCO BUILDING PRODUCTS L L C, DBA PABCO GYPSUM —Type QuietRock 527
3. Steel Covers —For seamed joints —0.024 in. min thickness (No. 24 MSG) uncoated, galv or stainless steel, for column ratings of 3 hr or less. For 4 hr ratings, only stainless steel cover to be used. Covers consist of two L—shaped sections with Snap—Lock or Pittsburgh sheet steel joints. Width to be determined on the basis of protection thickness and column size. Length of sections to provide 1/8 in. clearance per lineal foot of column length between cover and any restraint.
For lapped joints —(Max ratings 2 hr) —No. 22 MSG (0.027 in. thick) uncoated or galv steel. Fasteners used at laps to be No. 8 by 1/2 in. steel sheet metal screws spaced a max of 12 in. O.C. Other details to be the same as those stated for seamed joints as shown above.
4. Corner Bead —For columns with outer layer of wallboard attached to outside surface of metal cover, No. 28 MSG galv steel, 1−1/4 in. legs corner beads attached to wallboard with screws spaced 12 in. O.C.
5. Screws —For columns with outer layer of wallboard attached to outside surface of metal cover, self—drilling Phillips bugle head, 1 in. long screws for 1/2 or 5/8 in. thick wallboard (1−1/4 in. long screws for 3/4 in. thick wallboard) are used to attach wallboard to steel cover, and corner bead to wallboard.
6. Sodium Silicate Solution —(Not shown, optional) —Used to adhere one layer of wallboard to inside of steel cover prior to assembly.
7. Finishing System —(Not shown) —Joint compound applied over corner beads to a thickness of 1/16in.
*Indicates such products shall bear the UL or cUL Certification Mark for jurisdictions employing the UL or cUL Certification (such as Canada), respectively.

## UL DESIGN U309

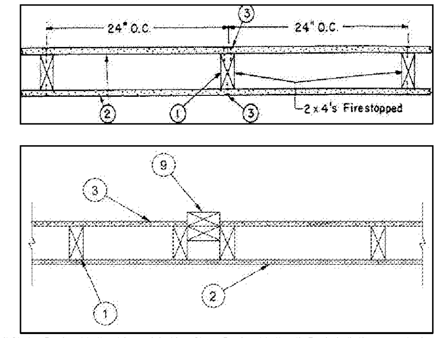


Design No. U309
April 15, 2019
Bearing Wall Rating -- 1 Hr.
Finish Rating -- See Items 2, 2A and 2B
This design was evaluated using a load design method other than the Limit States Design Method (e.g., Working Stress Design Method). For jurisdictions employing the Limit States Design Method, such as Canada, a load restriction factor shall be used -- See Guide BXUV or BXUV7
* Indicates such products shall bear the UL or cUL Certification Mark for jurisdictions employing the UL or cUL Certification (such as Canada), respectively.
1. Wood Studs -- Nom 2 by 4 in., spaced 24 in. OC effectively firestopped.
2. Gypsum Board* -- 5/8 in. thick, 4 ft wide, applied either horizontally or vertically,
nailed to studs and bearing plates with 6d cement coated nails min. 1-7/8 in. long, 0.0915 in. shank diam and 1/4 in. diam heads spaced 7 in. OC. Finish Rating 27 Min. When used in widths other than 48 in., gypsum board to be installed horizontally.
When Steel Framing Members* (Items 5, 5A, 5B, 5C, or 5D) are used, wallboard attached to furring channels with 1 in. long Type S bugle-head steel screws spaced 12 in. OC.
When Item 6, resilient channels are used, 5/8 in. thick, 4 ft wide applied vertically. Screw attached furring channels with 1 in. long, self-drilling, self-tapping Type S or S-12 steel screws spaced 8 in. OC, vertical joints located midway between studs.
ACADIA DRYWALL SUPPLIES LTD -- Type X, 5/8 Type X, Type Blueglass Exterior Sheathing
AMERICAN GYPSUM CO -- Types AGX-1, M-Glass, AG-C, LightRoc
BEIJING NEW BUILDING MATERIALS PUBLIC LTD CO -- Type DBX-1
CERTAINTEED GYPSUM INC -- Type X, Type X-1, Types EGRG, GlasRoc, GlasRoc-2, Type C
CONTINENTAL BUILDING PRODUCTS OPERATING CO, L L C -- Types LGFC6A, LGFC2A, LGFC-C/A, LGCF-WD, LGLLX, CLLX
GEORGIA-PACIFIC GYPSUM L L C -- Types 5, 6, 9, C, DAP, DD, DA, DAPC, DGG, DS, GPFS6, LS (finish rating 23 min), Type X, Veneer Plaster Base - Type X, Water Rated - Type X, Sheathing - Type X, Soffit - Type X, TG-C, Type LWX, Veneer Plaster Base-Type LWX, Water Rated-Type LWX, Sheathing Type-LWX, Soffit-Type LWX, Type DGLW, Water Rated-Type DGLW, Sheathing Type- DGLW, Soffit-Type DGLW, Type LW2X, Veneer Plaster Base - Type LW2X, Water Rated - Type LW2X, Sheathing - Type LW2X, Soffit - Type LW2X, Type DGL2W, Water Rated - Type DGL2W, Sheathing - Type DGL2W
NATIONAL GYPSUM CO -- Types -eXP-C, FSK, FSK-C, FSW, FSW-3, FSW-5, FSW-C, FSW-G, FSMR-C, FSW-6 (finish rating 20 min), FSL, FSW-8
PABCO BUILDING PRODUCTS L L C, DBA PABCO GYPSUM -- Type C, PG-9, PG-11, PG-C, PGS-WRS
PANEL REY S A -- Types GREX, PRC, PRC2, PRX, RHX, MDX, ETX
SIAM GYPSUM INDUSTRY (SARABURI) CO LTD -- Type EX-1
THAI GYPSUM PRODUCTS PCL -- Type X, Type C
2A. Gypsum Board* -- (As an alternate to Item 2, Not Shown) -- Nominal 5/8 in. thick, 4 ft wide panels, applied vertically to studs and bearing plates on one side of the assembly with 1-5/8 in. long Type S screws spaced 12 in. OC at perimeter of panels and 8 in. OC in the field. Horizontal joints of vertically applied panels need not be backed by studs. Panel joints covered with paper tape and two layers of joint compound. Screwheads covered with two layers of joint compound. Batts and Blankets placed in stud cavity as described in Item 4E. Not evaluated for use with Steel Framing Members, Furring Channels or Fiber, Sprayed.
PABCO BUILDING PRODUCTS L L C, DBA PABCO GYPSUM -- Type QuietRock 530 (finish rating 23 min)
2B. Gypsum Board* -- (As an alternate to Item 2) -- 5/8 in. thick gypsum panels, with square edges, applied either horizontally or vertically. Gypsum panels fastened to framing with 1-1/4 in. long Type W coarse thread gypsum panel steel screws spaced a max 8 in. OC, with last two screws 1 and 4 in. from edge of board or nailed to studs and bearing plates with 6d cement coated nails 1-7/8 in. long, 0.0915 in. shank diam and 1/4 in. diam heads spaced 7 in. OC. When used in widths of other than 48 in., gypsum boards are to be installed horizontally.
GEORGIA-PACIFIC GYPSUM L L C -- Type DGG, GreenGlass Type X (finish rating 23 min).
2C. Gypsum Board* -- (As an alternate to Item 2) -- 5/8 in. thick, 4 ft. wide, paper surfaced applied vertically only and secured as described in Item 2.
GEORGIA-PACIFIC GYPSUM L L C -- Type X ComfortGuard Sound Deadening Gypsum Board (finish rating 27 min)
NATIONAL GYPSUM CO -- SoundBreak XP Type X Gypsum Board
2D. Gypsum Board* -- (As an alternate to Items 2 through 2C) -- Nominal 5/8 in. thick, 4 ft wide panels, applied vertically and secured as described in Item 2.
PABCO BUILDING PRODUCTS L L C, DBA PABCO GYPSUM -- Type QuietRock ES
2E. Gypsum Board* -- (As an alternate to Item 2) -- 5/8 in. thick, 4 ft. wide, paper surfaced applied vertically or horizontally and secured as described in Item 2 or 2K.
CERTAINTEED GYPSUM INC -- Type SilentFX
2F. Gypsum Board* -- (As an alternate to 5/8 in. Type FSW in Item 2) -- 2 layers nom. 5/16 in. thick gypsum panels applied vertically or horizontally. Horizontal joints on the same side need not be staggered. Inner layer attached with fasteners as described in item 2, spaced [illegible] OC. Outer layer attached per Item 2.
NATIONAL GYPSUM CO -- Type FSW
2G. Gypsum Board* -- (As an alternate to Item 2) -- 5/8 in. thick, 4 ft. wide, applied vertically or horizontally with vertical joints centered over studs and staggered one stud cavity on opposite sides of studs. Secured as described in Item 2 or 2[illegible].
CERTAINTEED GYPSUM INC -- 5/8" Easi-Lite Type X
THAI GYPSUM PRODUCTS PCL -- 5/8" Easi-Lite Type X
2H. Wall and Partition Facings and Accessories* -- (As an alternate to Item 2) -- Nominal 5/8 in. thick, 4 ft wide panels, applied vertically and secured as described in Item 2.
PABCO BUILDING PRODUCTS L L C, DBA PABCO GYPSUM -- Type QuietRock 527.
2I. Gypsum Board* -- (As an alternate to Item 2) -- 5/8 in. thick gypsum panels, with beveled, square, or tapered edges, applied either horizontally or vertically. Gypsum panels fastened to framing with 1-1/4 in. long Type W coarse thread gypsum panel steel screws spaced a maximum 10 in. OC with the last two screws 4 and 1 in. from the edges of the board. When used in widths other than 48 in., gypsum panels are to be installed horizontally.
CONTINENTAL BUILDING PRODUCTS OPERATING CO, L L C -- Type LGFC6A (finish rating 21 min), Type LGFC2A, Type LGFC-C/A, Type LGFC-WD, Type LGLLX
2J. Gypsum Board* -- (As an alternate to Item 2) -- 5/8 in. thick gypsum panels, with beveled, square, or tapered edges, applied either horizontally or vertically. Gypsum panels fastened to framing as described in Item 2 or with 1-1/4 in. long Type W coarse thread gypsum panel steel screws spaced a max 8 in. OC, with last screw 1 in. from edge of board. When used in widths of other than 48 in., gypsum boards are to be installed horizontally. When square edge boards are used joint treatment, Item 3, may be omitted.
AMERICAN GYPSUM CO -- Types AGX-1, M-Glass, AG-C
NATIONAL GYPSUM CO -- Type FSK, Type FSK-G, Type FSW, Type FSW-3, Type FSW-5, Type FSW-G, Type FSK-C, Type FSW-C, Type FSMR-C, Type FSW-6, Type FSL
2K. Gypsum Board* -- (As an alternate to Item 2) -- 5/8 in. thick gypsum panels, with beveled, square, or tapered edges, applied either horizontally or vertically. Gypsum panels fastened to framing with 1-1/4 in. long Type W coarse thread gypsum panel steel screws spaced a max 8 in. OC, with last screw 1/2 in. from edge of board. When used in widths of other than 48 in., gypsum boards are to be installed horizontally.
CERTAINTEED GYPSUM INC -- Type X, Type X-1, Types EGRG, GlasRoc, GlasRoc-2, Type C
3. Joints and Fastener Heads -- Wallboard joints covered with paper tape and joint compound. Fastener heads covered with joint compound. Gypsum plaster not more than 1/8 in. thick may be applied over the wallboard in addition to the specified joint treatment.
4. Batts and Blankets* -- (Not Shown) -- Optional glass fiber insulation.
CERTAINTEED CORP
JOHNS MANVILLE
OWENS CORNING
4A. Fiber, Sprayed* -- As an alternate to Batts and Blankets (Item 4) -- Spray applied cellulose material. The fiber is applied with water to completely fill the enclosed cavity in accordance with the application instructions supplied with the product with a nominal dry density of 2.7 lb/ft3. Alternate Application Method: The fiber is applied without water or adhesive at a nominal dry density of 3.5 lb/ft3, in accordance with the application instructions supplied with the product. When Item 5 is used, Fiber, Sprayed shall be INS735, INS745, INS765LD or INS770LD.
U S GREENFIBER L L C -- INS735 & INS745 for use with wet or dry application. INS510LD, INS515LD, INS541LD, INS735, INS745, INS765LD, and INS770LD are to be used for dry application only
4B. Fiber, Sprayed* -- As an alternate to Batts and Blankets (Item 4) -- Spray applied cellulose insulation material. The fiber is applied with water to interior surfaces in accordance with the application instructions supplied with the product. Applied to completely fill the enclosed cavity. Minimum dry density of 4.3 pounds per cubic ft.
NU-WOOL CO INC -- Cellulose Insulation
4C. Batts and Blankets* -- Required for use with resilient channels, Item 6, 3 in. thick mineral wool batts, placed to fill interior of wall, attached to the 4 in. face of the studs with staples placed 24 in. OC.
ROCKWOOL -- Type SAFEnSOUND
THERMAFIBER INC -- Type SAFB, SAFB FF
4D. Glass Fiber Insulation -- (As an alternate to Item 4C) -- 3 in. thick glass fiber batts bearing the UL Classification Marking as to Surface Burning and/or Fire Resistance, placed to fill the interior of the wall, attached to the 4 in. face of the studs with staples placed 24 in. OC. See Batts and Blankets (BKNV or BZJZ) Catagories for names of Classified companies.
4E. Batts and Blankets* -- (Required for use with Wall and Partition Facings and Accessories, Item 2A) -- Glass fiber insulation, nom 3-1/2 in. thick, min. density of 0.80 pcf, with a flame spread of 25 or less and a smoke developed of 50 or less, friction-fitted to completely fill the stud cavities. See Batts and Blankets Category (BKNV) for names of manufacturers.
4F. Fiber, Sprayed* -- As an alternate to Batts and Blankets (Item 4) -- Spray applied cellulose fiber. The fiber is applied with water to completely fill the enclosed cavity in accordance with the application instructions supplied with the product. The minimum dry density shall be 4.30 lbs/ft3.
INTERNATIONAL CELLULOSE CORP -- Celbar-RL
4G. Fiber, Sprayed* -- As an alternate to Batts and Blankets (Item 4) -- Spray-applied cellulose material. The fiber is applied with water to completely fill the enclosed cavity in accordance with the application instructions supplied with the product. To facilitate the installation of the material, any thin, woven or non-woven netting may be attached by any means possible to the outer face the studs. The material shall reach equilibrium moisture content before the installation of materials on either face of the studs. The minimum dry density shall be 5.79 lbs/ft3.
APPLEGATE HOLDINGS L L C -- Type 1 SAFE Applegate Fired Rated Material
5. Steel Framing Members* -- (Optional, Not Shown) -- Furring channels and Steel Framing Members as described below:
a. Furring Channels -- Formed of No. 25 MSG galv steel. 2-9/16 in. or 2-23/32 in. wide by 7/8 in. deep, spaced 24 in. OC perpendicular to studs. Channels secured to studs as described in Item b. Ends of adjoining channels are overlapped 6 in. and tied together with double strand of No. 18 SWG galv steel wire near each end of overlap. As an alternate, ends of adjoining channels may be overlapped 6 in. and secured together with two self-tapping #6 framing screws, min. 7/16 in. long at the midpoint of the overlap, with one screw on each flange of the channel. Wallboard attached to furring channels as described in Item 2.
b. Steel Framing Members* -- Used to attach furring channels (Item a) to studs (Item 1). Clips spaced 48 in. OC., and secured to studs with No. 8 x 2-1/2 in. coarse drywall screw through the center grommet. Furring channels are friction fitted into clips. RSIC-1 clip for use with 3-9/16 in. wide furring channels. RSIC-1 (2.75) clip for use with 2-23/32 in. wide furring channels.
PAC INTERNATIONAL L L C -- Types RSIC-1, RSIC-1 (2.75)
5A. Steel Framing Members* -- (Optional, Not Shown) -- Furring channels and Steel Framing Members as described below:
a. Furring Channels -- Formed of No. 25 MSG galv steel. 2-3/8 in. wide by 7/8 in. deep, spaced 24 in. OC perpendicular to studs. Channels secured to studs as described in Item b. Ends of adjoining channels are overlapped 6 in. and tied together with double strand of No. 18 SWG galv steel wire near each end of overlap. As an alternate, ends of adjoining channels may be overlapped 6 in. and secured together with two self-tapping #6 framing screws, min. 7/16 in. long at the midpoint of the overlap, with one screw on each flange of the channel. Gypsum board attached to furring channels as described in Item 2.
b. Steel Framing Members* -- Used to attach furring channels (Item a) to studs. Clips spaced 48 in. OC. Genie clips secured to studs with No. 8 x 1-1/2 in. coarse drywall screw through the center hole. Furring channels are friction fitted into clips.
PLITEQ INC -- Type Genie Clip
5B. Steel Framing Members* -- (Optional, Not Shown) -- Furring channels and Steel Framing Members as described below:
a. Furring Channels -- Formed of No. 25 MSG galv steel. Spaced 24 in. OC perpendicular to studs. Channels secured to studs as described in Item b. Ends of adjoining channels overlapped 6 in. and tied together with double strand of No. 18 AWG galvanized steel wire. Gypsum board attached to furring channels as described in Item 2.
b. Steel Framing Members* -- Used to attach furring channels (Item 5Ba) to studs. Clips spaced 48 in. OC., and secured to studs with 2 in. coarse drywall screw with 1 in. diam washer through the center hole. Furring channels are friction fitted into clips.
STUDCO BUILDING SYSTEMS -- RESILMOUNT Sound Isolation Clips - Type A237R

## UL DESIGN U309 (CONT.)

5C. Steel Framing Members* -- (Optional, Not Shown) -- Furring channels and Steel Framing Members as described below:
a. Furring Channels -- Formed of No. 25 MSG galv steel. Spaced 24 in. OC perpendicular to studs. Channels secured to studs as described in Item 5Cb. Ends of adjoining channels overlapped 6 in. and tied together with double strand of No. 18 AWG galvanized steel wire. Gypsum board attached to furring channels as described in Item 3.
b. Steel Framing Members* -- Used to attach furring channels (Item 5Ca) to studs. Clips spaced 48 in. OC, and secured to studs with No. 8 × 2-1/2 in. coarse drywall screw through the center hole. Furring channels are friction fitted into clips.
REGUPOL AMERICA -- Type SonusClip
5D. Steel Framing Members* -- (Optional, Not Shown) -- Resilient channels and Steel Framing Members as described below:
a. Resilient Channels -- Formed of No. 25 MSG galv steel, spaced 24 in. OC, and perpendicular to studs. Channels secured to studs as described in Item b. Ends of adjoining channels overlapped 6 in. and secured in place with two No. 8 15 x 1/2 in. Philips Modified Truss screws spaced 2-1/2 in. from the center of the overlap. Gypsum board attached to resilient channels as described in Item 3.
b. Steel Framing Members* -- Used to attach resilient channels (Item 5Da) to studs. Clips spaced 48 in. OC., and secured to studs with No. 8 x 2-1/2 in. coarse drywall screw through the center hole. Resilient channels are secured to clips with one No. 10 x 1/2 in. pan-head self-drilling screw.
KEENE BUILDING PRODUCTS CO INC -- Type RC+ Assurance Clip
6. Furring Channel -- Optional -- Not Shown -- For use on one side of the wall - Resilient channels, 25 MSG galv steel, spaced vertically 24 in. OC, flange portion screw attached to one side of studs with 1-1/4 in. long diamond shaped point, double lead Phillips head steel screws. When resilient channels are used, insulation, Items 4C or 4D is required.
7. Wall and Partition Facings and Accessories* -- (Optional, Not Shown) -- Nominal 1/2 in. thick, 4 ft wide panels, for optional use as an additional layer on one or both sides of the assembly. Panels attached in accordance with manufacturer's recommendations. When the QR-500 or QR-510 panel is installed between the wood framing and the UL Classified gypsum board, the required UL Classified gypsum board layer(s) is/are to be installed as indicated as to fastener type and spacing, except that the required fastener length shall be increased by a minimum of 1/2 in. Not evaluated or intended as a substitute for the required layer(s) of UL Classified Gypsum Board.
PABCO BUILDING PRODUCTS L L C, DBA PABCO GYPSUM -- Type QuietRock QR-500 and QR-510
8. Cementitious Backer Units* -- (Optional Item Not Shown -- For Use On Face Of 1 Hr With All Standard Items Required) -- [illegible]/16 in., [illegible] in., 5/8 in., 3/4 in. or 1 in. thick, min. 32 in. wide.- Applied vertically or horizontally with vertical joints centered over studs. Fastened to studs and runners with cement board screws of adequate length to penetrate stud by a minimum of 3/8 in. for steel framing members, and a minimum of [illegible] in. for wood framing members spaced a max of 8 in. OC. When 4 ft. wide boards are used, horizontal joints need not be backed by framing.
NATIONAL GYPSUM CO -- Type DuraBacker, PermaBase, DuraBacker Plus, or PermaBase Plus
9. Non-Bearing Wall Partition Intersection -- (Optional) -- Two nominal 2 by 4 in. stud or nominal 2 by 6 in. stud nailed together with two 3in. long 10d nails spaced a max. 16 in. OC. vertically and fastened to one side of the minimum 2 by 4 in. stud with 3 in. long 10d nails spaced a max 16 in. OC. vertically. Intersection between partition wood studs to be flush with the 2 by 4 in. studs. The wall partition wood studs are to be framed by with a second 2 by 4 in. wood stud fastened with 3 in. long 10d nails spaced a max. 16 in. OC. vertically. Maximum one non-bearing wall partition intersection per stud cavity. Non-bearing wall partition stud depth shall be at a minimum equal to the depth of the bearing wall.
10. Mineral and Fiber Board* -- (Optional, Not Shown) -- For optional use as an additional layer on one side of wall. Nom 1/2 in. thick, 4 ft wide with long dimension parallel and centered over studs. Attached to framing with 2 in. long Type W steel screws, spaced 12 in. OC. The required UL Classified gypsum board layer(s) is/are to be installed as indicated as to fastener type and spacing, except that the required fastener length shall be increased by a minimum of 1/2 in. Not evaluated or intended as a substitute for the required layer(s) of UL Classified Gypsum Board.
HOMASOTE CO -- Homasote Type 440-32
10A. Mineral and Fiber Board* -- (Optional, Not Shown) -- For use with Items 10B-10E -- For optional use as an additional layer on one side of wall. Nom 1/2 in. thick, 4 ft wide with long dimension parallel and centered over studs. Attached to framing with minimum 1-3/8 in. long ring shanked nails or 1-1/4 in. long Type W steel screws, spaced 12 in. OC along board edges and 24 in. OC in field of board along intermediate framing. Not evaluated or intended as a substitute for the required layer(s) of UL Classified Gypsum Board.
HOMASOTE CO -- Homasote Type 440-32
10B. Glass Fiber Insulation -- (For use with Item 10A) 3-1/2 in. thick glass fiber batts bearing the UL Classification Marking as to Surface Burning and/or Fire Resistance, placed to fill the interior of the wall. See Batts and Blankets (BKNV or BZJZ) categories for names of Classified companies.
10C. Batts and Blankets* -- (As an alternate to Item 10B, For use with Item 10A), 3 in. thick mineral wool batts, placed to fill interior of wall, attached to the 3-1/2 in. face of the studs with staples placed 24 in. OC.
ROCKWOOL -- Type SAFEnSOUND
THERMAFIBER INC -- Type SAFB, SAFB FF
10D. Adhesive -- (For use with Item 10A) -- Construction grade adhesive applied in vertical, serpentine, nominal 3/8 in. wide beads down the length of both vertical edges of Mineral and Fiber Board (Item 10A).
10E. Gypsum Board* -- (For use with Item 10A) -- 5/8 in. thick, 4 ft wide, applied vertically over Mineral and Fiber Board (Item 10A) with vertical joints located [illegible] stud cavities. Secured to mineral and fiber boards with 1-1/2 in. Type G Screws spaced 8 in. OC along edges of each vertical joint and 12 in. OC in intermediate field of the Mineral and Fiber Board (Item 10A). Secured to outermost studs and bearing plates with 2 in. long Type S screws spaced 8 in. OC. Gypsum Board joints covered with paper tape and joint compound. Screw heads covered with joint compound. Finish Rating 30 Min.
AMERICAN GYPSUM CO -- Type AG-C
CERTAINTEED GYPSUM INC -- Type FRPC, Type C
CGC INC -- Types C, IP-X2, IPC-AR
CONTINENTAL BUILDING PRODUCTS OPERATING CO, L L C -- Type LGFC-C/A
GEORGIA-PACIFIC GYPSUM L L C -- Types 5, DAPC, TG-C
NATIONAL GYPSUM CO -- Types FSK-C, FSW-C
PABCO BUILDING PRODUCTS L L C, DBA PABCO GYPSUM -- Type PG-C.
PANEL REY S A -- Types PRC, PRC2
THAI GYPSUM PRODUCTS PCL -- Type C
UNITED STATES GYPSUM CO -- Types C, IP-X2, IPC-AR
USG MEXICO S A DE C V -- Types C, IP-X2, IPC-AR
10F. Mineral and Fiber Board -- (Optional, Not Shown) -- For optional use as an additional layer on one side of wall - Nom 1/2 in. thick, 4 ft wide, square edge fiber boards applied vertically to studs on one side of the wall in between the wood studs and the UL Classified Gypsum Board (Item 2). Fiber boards installed with 1-1/4 in. long, Type W, bugle head, coarse thread gypsum board screws spaced 12 in. OC max, with the last screws spaced 2 in. and 6 in. from edge of board. Gypsum board (Item 2) installed as indicated as to fastener type and spacing, except that the required fastener length shall be increased by a minimum of 1/2 in. Not evaluated or intended as a substitute for the required layer(s) of UL Classified Gypsum Board.
BLUE RIDGE FIBERBOARD INC -- SoundStop
11. Wall and Partition Facings and Accessories* -- (Optional, Not Shown) -- For use with Item 1, Item 2, Item 3, Items 4, and Item 6. For maximum fire rating of 1 hour. On one side of the wall, over the first layer of Gypsum Board (Item 2), install RefleXor membrane with the gold side facing outwards. Membrane installed with T50 staples spaced 12 inches on center in both directions as per manufacturer's instructions, seams in membrane to be overlapped by 2 inches. When RefleXor membrane is used an additional layer of Gypsum Board that is identical to the first layer and as specified in Item 2 shall be installed over the membrane. Additional layer of Gypsum Board to be installed through the membrane to the stud as specified in Item 2 except the fastener length shall be increased by a minimum of 5/8 inch. Install Batts and Blankets in the stud cavity as per Item 4. On the other side of the wall prior to the installation of the Gypsum Board install Resilient Channels as per Item 6. Over the Resilient Channel install 3/4 inch thick SONOpan panel secured to the Resilient Channel with drywall screws and washers spaced at 16 in. OC on the perimeter of the panel and 8 in. OC in the field of the panel. Over the SONOpan panel install the same Gypsum Board as specified in Item 2 with the fastener length increased by minimum 3/4 inch. Not evaluated or intended as a substitute for the required layer(s) of UL Classified Gypsum Board.
MSL -- RefleXor membrane, SONOpan panel
* Indicates such products shall bear the UL or cUL Certification Mark for jurisdictions employing the UL or cUL Certification (such as Canada), respectively.

## UL DESIGN U905

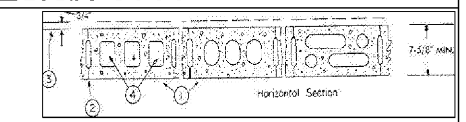


Design No. U905
February 18, 2019
Bearing Wall Rating -- 2 HR.
Nonbearing Wall Rating -- 2 HR
This design was evaluated using a load design method other than the Limit States Design Method (e.g., Working Stress Design Method). For jurisdictions employing the Limit States Design Method, such as Canada, a load restriction factor shall be used -- See Guide BXUV or BXUV7
* Indicates such products shall bear the UL or cUL Certification Mark for jurisdictions employing the UL or cUL Certification (such as Canada), respectively.
1. Concrete Blocks* -- Various designs. Classification D-2 (2 hr).
See Concrete Blocks category for list of eligible manufacturers.
2. Mortar -- Blocks laid in full bed of mortar, nom. 3/8 in. thick, of not less than 2-1/4 and not more than 3-1/2 parts of clean sharp sand to 1 part Portland cement (proportioned by volume) and not more than 50 percent hydrated lime (by cement volume). Vertical joints staggered.
3. Portland Cement Stucco or Gypsum Plaster -- Add 1/2 hr to classification if used. Where combustible members are framed in wall, plaster or stucco must be applied on the face opposite framing to achieve a max. Classification of 1-1/2 hr. Attached to concrete blocks (Item 1).
4. Loose Masonry Fill -- If all core spaces are filled with loose dry expanded slag, expanded clay or shale (Rotary Kiln Process), water repellant vermiculite masonry fill insulation, or silicone treated perlite loose fill insulation add 2 hr to classification.
5. Foamed Plastic* -- (Optional-Not Shown) -- 1-1/2 in. thick max, 4 ft wide sheathing attached to concrete blocks (Item 1).
ATLAS ROOFING CORP -- "EnergyShield Pro Wall Insulation", "EnergyShield Pro 2 Wall Insulation", EnergyShield CGF Pro and EnergyShield Ply Pro
CARLISLE COATINGS & WATERPROOFING INC -- Type R2+ SHEATHE
FIRESTONE BUILDING PRODUCTS CO L L C -- "Enverge™ CI Foil Exterior Wall Insulation" and "Enverge™ CI Glass Exterior Wall Insulation"
HUNTER PANELS -- Types Xci-Class A, Xci 286
RMAX OPERATING L L C -- Types "TSX-8500", "ECOMAXci FR", "TSX-8510", "ECOMAX xi FR White", "ECOMAXci", "ECOMAXci FR Air Barrier", "Thermasheath-XP", "Thermasheath", "Durasheath", "Thermasheath-3", "Durasheath-3".
THE DOW CHEMICAL CO -- Types Thermax Sheathing, Thermax Light Duty Insulation, Thermax Heavy Duty Insulation, Thermax Metal Building Board, Thermax White Finish Insulation, Thermax ci Exterior Insulation, Thermax XARMOR ci Exterior Insulation, Thermax IH Insulation, Thermax Plus Liner Panel, Thermax Heavy Duty Plus (HDP) and TUFF-R™ ci Insulation
5A. Building Units -- As an alternate to Items 5, min. 1-in thick polyisocyanurate composite foamed plastic insulation boards, nom. 48 by 48 or 96 in.
RMAX OPERATING L L C -- "Thermasheath-SI", "ECOBASEci", "ThermaBase-CI", "ECOMAXci FR Ply", "ECOMAXci Ply".
* Indicates such products shall bear the UL or cUL Certification Mark for jurisdictions employing the UL or cUL Certification (such as Canada), respectively.

## FIRE RATED ASSEMBLY GUIDE - VERTICAL

| CONSTRUCTION TYPE/LOCATION - RATING | ASSEMBLY | SHEET No. | STC REQUIRED BY CODE |
|---|---|---|---|
| TYPICAL EXTERIOR WALL - 1 HOUR | U.L. U305 | A8.14 | N/A |
| TYPICAL EXTERIOR WALL - 2 HOUR | U.L. U371 | A8.13 | N/A |
| TYPICAL CORRIDOR WALL - 1 HOUR | U.L. U309 | A8.11 | 50 |
| TYPICAL INTERIOR BEARING WALL - 1 HOUR | U.L. U305 | A8.14 | N/A |
| ELEVATOR SHAFT - 2 HOUR | U.L. U905 | A8.11 | N/A |
| TYPICAL INTERIOR NON-BEARING WALL - NO RATING | N/A | N/A | N/A |
| TYPICAL TENANT WALL - 1 HOUR | U.L. U341 | A8.13 | 50 |
| TYPICAL EXTERIOR BEARING TENANT WALL - 2 HOUR | U.L. U342 | A8.12 | 50 |
| TYPICAL STEEL COLUMN PROTECTION - 2 HOUR | U.L. X526 | A8.11 | N/A |
| SHAFT LINER WALL - 2 HOUR | U.L. U347 | A8.13 | N/A |
| TYPICAL CORRIDOR WALL UNDER PODIUM - 1 HR | U.L. U465 | A8.15 | N/A |
| TYPICAL EXTERIOR WALL - 1 HOUR | U.L. U356 | A8.12 | N/A |
| GREASE SHAFTS - 2 HR | U.L. U415 | A8.16 | N/A |
| | | | |
| | | | |


Common North, Prospect, KY
6.4.19
CHARLAN REGISTERED No. 5035 COMMONWEALTH OF KENTUCKY ARCHITECT
Charles L. Charlan, Architect, AR8219
Charlan Brock & Associates, AAC000798


# Lyric at Norton Commons
Prospect, Kentucky

Bristol Development Group
381 Mallory Station Rd, Suite 204
Franklin, TN 37067


cba
charlan • brock associates
architects planners
1770 fennell street
maitland florida 32751-7208
407 660 8900 f: 407 875 9948
www . cbaarchitects . com


FIRE RATED ASSEMBLIES

VERTICAL RATINGS

date: **06-04-2019**
job no: **3789.15**
drawn by: **JHB**
reviewed by: **CBA**
file: **3789-A8.11**
issue history:

A8.11


charlan, brock & associates, inc. hereby reserves its common law copyright and other property rights in these plans, ideas, and designs. these ideas, designs, and plans are not to be reproduced, changed or copied in any form or manner whatsoever, nor are they to be assigned to any third party, without first obtaining the express written permission from c.b.a., inc. written dimensions shall have precedence over scale dimensions.
Order Plans @ www.LDHLine.com