Note:

1. METAL FABRICATOR TO PROVIDE ENGINEERED SIGNED AND SEALED SHOP DWG'S OF ALL CANOPIES / AWNINGS FOR ARCHITECT'S AND OWNER'S REVIEW AND APPROVAL.
2. SUBMITTALS SHALL INCLUDE ALL ASSOCIATED PERIMETER SUPPORT, GUTTERS / DOWNSPOUT, ALUMINUM SUPPORT, BEAMS DETAILS, COLUMNS, ATTACHMENT DETAILS WITH ALL REQUIRED IN-WALL BLOCKING FOR SYSTEM , ETC.
3. MANUFACTURER TO INCLUDE ISOLATION MEMBRANES AND SPACERS AS REQUIRED BY INDUSTRY'S BEST PRACTICE STANDARDS TO ENSURE PROTECTION OF CANOPY MATERIAL FROM ADJACENT CONSTRUCTION MATERIAL AND CHEMICAL INTERACTION.

4 TYPICAL CANOPY NOTES

SCALE: 3"=1'-0"

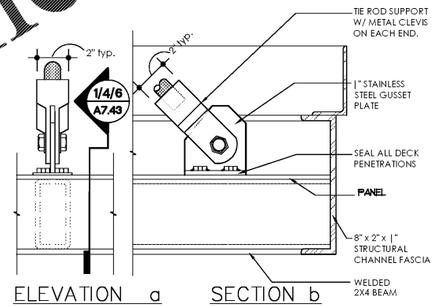

3 CANOPY EDGE

TYPICAL ALL CANOPIES

SCALE: 3"=1'-0"

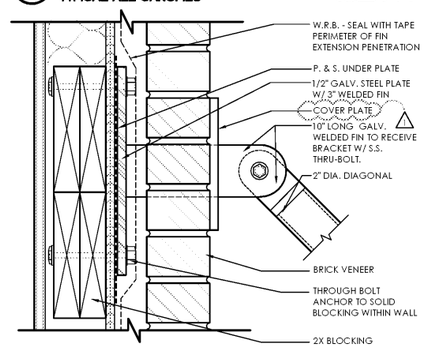

2 CANOPY TIE-BACK

TOP (BRICK)

SCALE: 3"=1'-0"

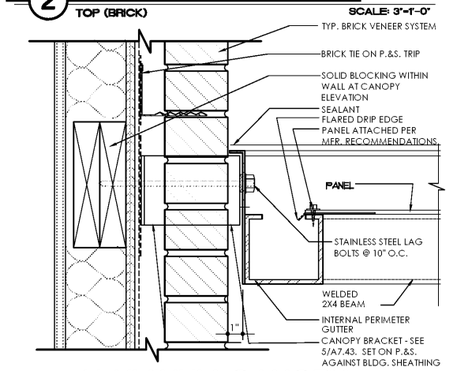

1 ALUMINUM CANOPY

TYPICAL AT ALL CONDITIONS (BRICK)

SCALE: 3"=1'-0"

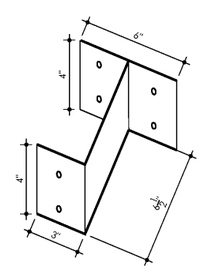

5 CANOPY BRACKET

TYPICAL OFFSET • BRICK CONDITIONS

SCALE: 3"=1'-0"

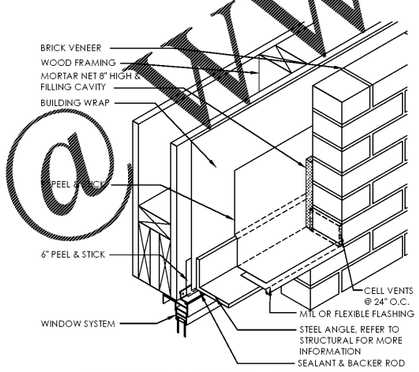

10 BRICK HEAD FLASHING

SCALE: = N.T.S.

Order Plans @ WWW.LDILine.com

7/3/19

Lyric at Norton Commons
Prospect, Kentucky

Bristol Development Group
381 Mallory Station Rd, Suite 204
Franklin, TN 37067

charlan • brock associates
architects planners

1770 fennell street
maitland florida 32751-7208
407 660 8900 f: 407 875 9948
www . cbaarchitects . com

TYPICAL

BRICK DETAILS

date: 06-04-2019
job no: 3789.15
drawn by: JHB
reviewed by: CBA
file: 3789-A7.32
issue history:
△ 07-03-19

A7.32

charlan, brock & associates, inc., hereby reserves its common law copyright and other property rights in these plans, ideas, and designs. these ideas, designs, and plans are not to be reproduced, changed or copied in any form or manner whatsoever, nor are they to be assigned to any third party, without first obtaining the express written permission from c.b.a., inc. written dimensions shall have precedence over scale dimensions.