Wall Opening Protective Materials (CLIV, CLIV7)

CLASSIFIED C UL US
Classified by Underwriters Laboratories, Inc. to UL 263 and CAN/ULC-S101

CP617 / CFS-P PA / FIRESTOP BOX INSERT

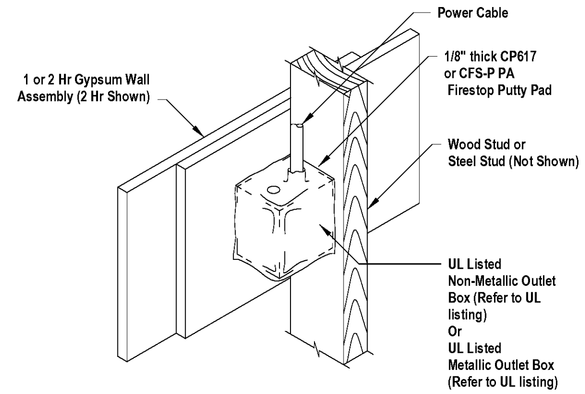

Hilti Firestop Systems

Reproduced by HILTI, Inc. Courtesy of Underwriters Laboratories, Inc. December 07, 2016

Wall Opening Protective Materials (CLIV, CLIV7)

CP617 / CFS-P PA / FIRESTOP BOX INSERT

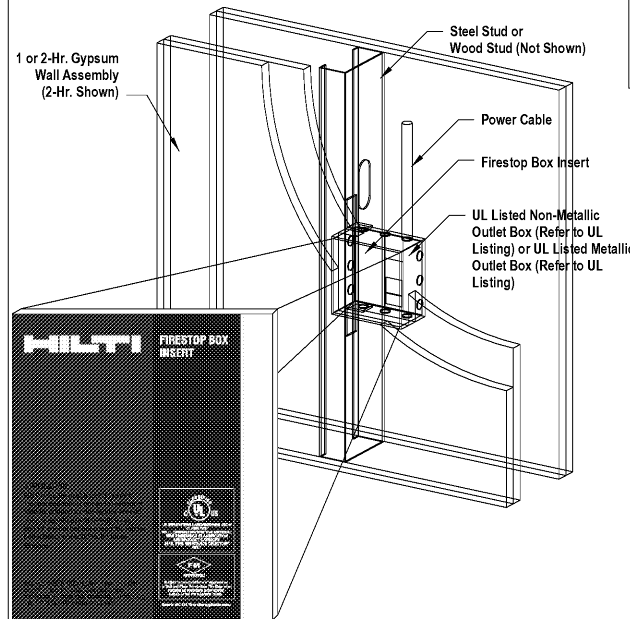

Hilti Firestop Systems

Reproduced by HILTI, Inc. Courtesy of Underwriters Laboratories, Inc. December 07, 2016

Wall Opening Protective Materials (CLIV, CLIV7)

CP617 / CFS-P PA / FIRESTOP BOX INSERT

CP 617 or CFS-P PA Firestop Putty Pads, for use with flush device UL Listed Metallic Outlet Boxes installed with steel mud rings or UL Listed Nonmetallic Outlet Boxes in framed wall assemblies as specified below. When protective material is used on outlet boxes on both sides of the wall as directed, the horizontal separation between outlet boxes on opposite sides of the wall may be less than 24 in. provided that the boxes are not installed back-to-back (unless otherwise indicated). Installation shall comply with the National Electrical Code (NFPA 70). Min 1/8 in. thick (CP 617) or min 0.2 in. (CFS-P PA) thick moldable putty pads are to be installed to completely cover the exterior surfaces of the outlet box (except for the side of the outlet box against the stud) and conduit fittings/connectors and to completely seal against the stud and gypsum board in the wall cavity unless otherwise noted below. When CFS-P PA is used, the putty pads may be installed with the release liner intact on the outside of the pad with the exception of any overlaps, in which case the liner is to be removed from the bottom layer at the overlap location. The box composition, max device dimensions, hourly rating, type of stud and type of faceplate are specified below.

CP 617 or CFS-P PA Firestop Putty Pads, for use with max 4 by 4 by max 2-1/8 in. flush device UL Listed Metallic Outlet Boxes installed with steel cover plates in 1 and 2 hr. fire rated gypsum wallboard wall assemblies framed with min 3-1/2 in. deep wood or steel studs and constructed as specified in the individual U300, U400 or V400 Series Wall and Partition Designs in the Fire Resistance Directory.

CP 617 or CFS-P PA Firestop Putty Pads, for use with max 4-11/16 by 4-11/16 by max 2-1/8 in., or max 4-3/8 by 4-7/8 by max 2-1/8 in., flush device UL Listed Metallic Outlet Boxes installed with steel cover plates for use in 1 hr fire rated V446 gypsum board/steel stud or U341 gypsum board/wood stud Wall and Partition Design No. in the Fire Resistance Directory. When U341 wall design is used, wall shall be sheathed with 5/8 in. gypsum board, and glass or mineral fiber batt insulation shall be installed in stud cavities in accordance with U341 design. Boxes may be installed back-to-back.

CP 617 or CFS-P PA Firestop Putty Pads, for use with max 4-11/16 by 4-11/16 by max 2-1/8 in. flush device UL Listed Metallic Outlet Boxes installed with steel cover plates for use in 1 and 2 hr fire rated gypsum board wall assemblies framed with min 3-1/2 in. deep wood or steel studs and constructed of the materials and in the manner specified in the individual U300, U400 or V400 Series Wall and Partition Designs in the Fire Resistance Directory. Min 0.8 pcf density fiberglass batt insulation is to be installed within the wall cavity required for 1 hr fire rated gypsum board wall assemblies and optional in 2 hr fire rated gypsum wallboard assemblies.

CP 617 or CFS-P PA Firestop Putty Pads, for use with max 4 by 3-3/4 by 3 in. deep UL Listed Nonmetallic Outlet Boxes manufactured by Carlon Electrical Products, made from polyvinyl chloride, and bearing a 2 hr rating under the "Outlet Boxes and Fittings Classification for Fire Resistance" category in the Fire Resistance Directory. Putty pads and boxes for use in 1 and 2 hr fire rated gypsum wallboard assemblies, framed with min 3-1/2 in. deep wood studs and constructed as specified in the individual U300 Series Wall and Partition Designs in the Fire Resistance Directory. Outlet box secured to wood stud by means of two nailing tabs supplied with the outlet box. Putty pads shall lap min 1/2 in. onto the stud and gypsum board within the stud cavity. Outlet boxes installed with steel or plastic cover plates.

CP 617 or CFS-P PA Firestop Putty Pads, for use with max 4 by 4 by 2-7/8 in. deep UL Listed Nonmetallic Outlet Boxes manufactured by Carlon Electrical Products, made from polyvinyl chloride, and bearing a 2 hr rating under the "Outlet Boxes and Fittings Classification for Fire Resistance" category in the Fire Resistance Directory. Putty pads and boxes for use in the 1 hr fire rated V446 gypsum board/steel stud or U341 gypsum board/wood stud Wall and Partition Design in the Fire Resistance Directory. When U341 wall design is used, wall shall be sheathed with 5/8 in. gypsum board, and glass or mineral fiber batt insulation shall be installed in stud cavities in accordance with U341 design. Outlet box secured to steel stud by means of fastening tab supplied with the outlet box. Putty pads shall lap min 1/2 in. onto the stud and gypsum board within the stud cavity. Outlet boxes installed with steel or plastic cover plates. Boxes may be installed back to back.

CP 617 Firestop Putty Pads, for use with max 2-1/4 by 3-3/4 by 2-3/4 in. deep UL Listed Nonmetallic Outlet Boxes manufactured by Pass and Seymore, Inc., and bearing a 2 hr rating under the "Outlet Boxes and Fittings Classification for Fire Resistance" category in the Fire Resistance Directory. Putty pads and boxes for use in 1 and 2 hr fire rated gypsum wallboard assemblies, framed with min 3-1/2 in. deep wood studs and constructed as specified in the individual U300 Series Wall and Partition Designs in the Fire Resistance Directory. Outlet box secured to wood stud by means of two nailing tabs supplied with the outlet box. Putty pads shall lap min 1/2 in. onto the stud and gypsum board within the stud cavity. Outlet boxes installed with steel or plastic cover plates.

CP 617 or CFS-P PA Firestop Putty Pads, for use with max 4 by 3-3/4 by 3 in. deep UL Listed Nonmetallic Outlet Boxes manufactured by Allied Molded Products, Inc., made from fiber reinforced thermoplastic and bearing a 2 hr rating under the "Outlet Boxes and Fittings Classification for Fire Resistance" category in the Fire Resistance Directory. Putty pads and boxes for use in 1 hr fire rated gypsum wallboard assemblies, framed with min 3-1/2 in. deep wood studs and constructed as specified in the individual U300 Series Wall and Partition Designs in the Fire Resistance Directory. Outlet box secured to wood stud by means of two nailing tabs supplied with the outlet box. Putty pads shall lap min 1/2 in. onto the stud and gypsum board within the stud cavity. Outlet boxes installed with plastic cover plates.

Hilti Firestop Systems

Reproduced by HILTI, Inc. Courtesy of Underwriters Laboratories, Inc. December 07, 2016

Wall Opening Protective Materials (CLIV, CLIV7)

CP617 / CFS-P PA / FIRESTOP BOX INSERT

CP 617 or CFS-P PA Firestop Putty Pads, for use with max 4 by 4 in. by 1-1/2 in. deep flush device UL Listed Metallic Outlet Boxes installed with steel cover plates in 1 hr. fire rated gypsum wallboard wall assemblies framed with min 3-1/2 in. deep wood or steel studs and constructed as specified in the individual U300, U400 or V400 Series Wall and Partition Designs in the Fire Resistance Directory. The boxes are installed back to back with 5 in. by 4 in. UL Classified fire block, CP 657 or CFS-BL Firestop Block installed in the cavity between the two boxes.

CP 617 or CFS-P PA Firestop Putty Pads, for use with max 14 by 4 by max 2-1/2 in. flush device UL Listed Metallic Outlet Boxes installed with steel cover plates in 1 and 2 hr. fire rated gypsum board wall assemblies framed with min 5-1/2 in. deep wood or steel studs for 2 hr fire rated walls and min 3-1/2 in. deep wood or steel studs for 1 hr fire rated walls. Walls constructed as specified in the individual U300, U400 or V400 Series Wall and Partition Designs in the Fire Resistance Directory. Stud cavity insulation is required and shall consist of min 5-1/2 in. (2 hr rated walls) or min 3-1/2 in. (1 hr rated walls) thick fiberglass (min 0.8 pcf) or mineral fiber (min 4 pcf). Putty pads shall lap min 1/2 in. onto the stud and gypsum board within the stud cavity. When boxes are interconnected by means of electrical metallic tube (EMT) or conduit, a ball of putty pad material shall be used to completely plug the open end of each EMT or conduit within the box.

CP 617 or CFS-P PA Firestop Putty Pads, for use with max 4-11/16 by 4-11/16 by max 2-1/8 in. flush device UL Listed Metallic Outlet Boxes installed with steel or plastic cover plates for use in 1 and 2 hr fire rated gypsum board wall assemblies framed with min 5-1/2 in. deep steel studs and constructed of the materials and in the manner specified in the individual U400 or V400 Series Wall and Partition Designs in the Fire Resistance Directory. Putty pads shall lap min 1/2 in. onto the stud and gypsum board within the stud cavity. When boxes are interconnected by means of electrical metallic tube (EMT) or conduit, a ball of putty pad material shall be used to completely plug the open end of each EMT or conduit within the outlet boxes. Metallic outlet boxes may be provided with steel attachment brackets which offset box min 1/4 in. from stud. When steel attachment brackets are used, putty pads to be affixed to the back and all four sides of the box.

CFS-P PA Moldable Putty Pads, for use with max 4-11/16 by 4-11/16 in. by max 2-1/8 in. flush device UL Listed Metallic Outlet Boxes installed with steel cover plates in 2 hr fire rated gypsum board wall assemblies framed with min 3-1/2 in. deep steel studs and constructed of the materials and in the manner specified in the individual U400 and V400 Series Wall and Partition Designs in the Fire Resistance Directory. An additional 3/4 in. ball of putty pad material shall be used to plug the end of each electrical metallic tube or conduit at its connection to the box.

CFS-P PA Moldable Putty Pads, for use with max 4 by 4 by 2-1/8 in. flush device UL Listed Metallic Outlet Boxes installed with steel or plastic cover plates in 2 hr fire rated gypsum board wall assemblies framed with min 3-1/2 in. deep steel studs and constructed of the materials and in the manner specified in the individual U400 and V400 Series Wall and Partition Designs in the Fire Resistance Directory. An additional 3/4 in. ball of putty pad material shall be used to plug the end of each electrical metallic tube or conduit at its connection to the box.

CFS-P PA Moldable Putty Pads, for use with max 14-1/4 by 4-1/2 by 2-1/2 in. flush device UL Listed Metallic Outlet Boxes installed with steel cover plates in 2 hr fire rated gypsum board wall assemblies framed with min 3-1/2 in. deep steel studs and constructed of the materials and in the manner specified in the individual U400 and V400 Series Wall and Partition Designs in the Fire Resistance Directory. An additional 3/4 in. ball of putty pad material shall be used to plug the end of each electrical metallic tube or conduit at its connection to the box.

HILTI Firestop Box Insert, for use with flush device UL Listed Metallic Outlet Boxes installed with steel mud rings or UL Listed Nonmetallic Outlet Boxes in framed wall assemblies as specified below. When protective material is used on outlet boxes on both sides of the wall as directed, the horizontal separation between outlet boxes on opposite sides of the wall may be less than 24 in. provided that the boxes are not installed back-to-back (unless otherwise indicated). Installation shall comply with the National Electrical Code (NFPA 70). The box composition, max device dimensions, hourly rating, type of stud and type of faceplate are specified below.

HILTI Firestop Box Insert, for use with max 4-11/16 by 4-11/16 by 2-1/8 in. deep UL Listed Metallic Outlet Boxes without internal clamps in 1 or 2 hr fire rated gypsum wallboard wall assemblies framed with min 3-1/2 in. deep wood or steel studs and constructed of materials and in the manner specified in the individual U300, U400 or V400 Series Wall and Partition Designs in the Fire Resistance Directory. Outlet boxes in 1 hr fire rated walls may be installed with plastic or steel cover plates. Outlet boxes in 2 hr fire rated walls shall be installed with steel cover plates. One 4-3/8 by 4-3/8 in. insert adhered to the interior back wall of the outlet box in accordance with the instructions supplied with the product. Smaller sized inserts may be cut and combined to achieve the 4-3/8 x 4-3/8 in coverage.

HILTI Firestop Box Insert, for use with max 4 by 4 by 1-1/2 in. deep and 2-1/8 in. deep UL Listed Metallic Outlet Boxes without internal clamps in 1 or 2 hr fire rated gypsum wallboard wall assemblies framed with min 3 1/2 in. deep steel or wood studs and constructed of materials and in the manner specified in the individual U400, V400 or U300 Series Wall and Partition Designs in the Fire Resistance Directory, as summarized in the Table below. One 3-11/16 by 3-3/4 in. insert adhered to the interior back wall of the outlet box in accordance with the instructions supplied with the product. Smaller sized inserts may be cut and combined to achieve the 3-11/16 x 3-3/4 in coverage.

Hilti Firestop Systems

Reproduced by HILTI, Inc. Courtesy of Underwriters Laboratories, Inc. December 07, 2016

Wall Opening Protective Materials (CLIV, CLIV7)

CP617 / CFS-P PA / FIRESTOP BOX INSERT

Box Size	Type of Box and Cover Plate	Hourly Rating	Wall Type
4 x 4 x 2-1/8 in deep	Metallic w/ steel cover plates	2-hour	U300, U400 or V400 - wood or steel studs
4 x 4 x 2-1/8 in deep	Metallic w/ plastic cover plates	1-hour	U300, U400 or V400 - wood or steel studs
4 x 4 x 1-1/2 in deep	Metallic w/ plastic cover plates	1-hour	U300 - wood studs

HILTI Firestop Box Insert, for use with max 2 1/8 x 4 x 2 1/8 in. deep UL Listed Metallic Outlet Boxes without internal clamps in 2 hr fire rated gypsum wallboard wall assemblies framed with min 3 1/2 in. deep wood or steel studs and constructed of materials and in the manner specified in the individual U300, U400 or V400 Series Wall and Partition Designs in the Fire Resistance Directory. Outlet boxes may be installed with steel cover plates. One 1-7/8 x 2-13/16 insert adhered to the interior back wall of the outlet box in accordance with the instructions supplied with the product.

HILTI Firestop Box Insert, for use with max 4-1/2 x 8-1/2 in. by 1-5/8 in. deep or max 3-3/4 x 5-1/2 in. by 2-1/2 in deep UL Listed Metallic Outlet Boxes without internal clamps in 1 hr or 2 hr fire rated gypsum wallboard wall assemblies framed with min 3 1/2 in. deep steel or wood studs and constructed of materials and in the manner specified in the individual U400, V400 or U300 Series Wall and Partition Designs in the Fire Resistance Directory, as summarized in the Table below. Outlet boxes installed with steel cover plates. Box inserts evenly spaced and adhered to the interior back wall of the outlet box in accordance with the instructions supplied with the product.

Box Size	Inserts Used	Fire Rating	Wall Type
4-1/2 x 8-1/2 x 1-5/8 in deep	Two 3-11/16 x 3-3/4 in. inserts **	2 hour	U300, U400 or V400 - wood or steel studs
3-3/4 x 5-1/2 x 2-1/2 in deep	One 3-11/16 x 3-3/4 in. insert and one 1-7/8 x 2-13/16 in. insert	1 hour	U300, U400, or V400 - wood or steel studs
** - Min 3/4 in. deep plaster rings installed over outlet box. After installation of gypsum board, nom 1/4 in. thickness of Hilti FS-ONE Sealant or FS-ONE MAX Intumescent Sealant, bearing the UL Classification Marking for Fill, Void or Cavity Materials, applied between the base layer of wallboard and the plaster ring.			

HILTI Firestop Box Insert , for use with 4-3/8 by 4-7/8 by 2-1/4 in. deep flush device UL Listed Metallic Outlet Boxes without internal clamps in 1 hr fire rated gypsum board wall assemblies framed with min 3-1/2 in. deep wood or steel studs and constructed of the materials and in the manner specified in the individual U300, U400 or V400 Series Wall and Partition Designs in the Fire Resistance Directory. One 4-3/8 in. wide by 4-3/8 in. high insert adhered to the interior back wall of the outlet box in accordance with the installation instructions supplied with the product. Smaller sized inserts may be cut and combined to achieve the 4-3/8 in. by 4-3/8 in. coverage and adhered to the interior back wall of the outlet box. Outlet boxes installed with plastic or steel cover plates.

HILTI Firestop Box Insert, for use with 4-3/8 by 4-7/8 by 2-1/4 in. deep flush device UL Listed Metallic Outlet Boxes without internal clamps in 2 hr fire rated gypsum board wall assemblies framed with min 3-1/2 in. deep wood or steel studs and constructed of the materials and in the manner specified in the individual U300, U400 or V400 Series Wall and Partition Designs in the Fire Resistance Directory. One 4-3/8 in. wide by 4-3/8 in. high insert adhered to the interior back wall of the outlet box in accordance with the installation instructions supplied with the product. Smaller sized inserts may be cut and combined to achieve the 4-3/8 in. by 4-3/8 in. coverage and adhered to the interior back wall of the outlet box. Outlet boxes installed with steel cover plates.

CP 617 or CFS-P PA Firestop Putty Pads and HILTI Firestop Box Inserts, for use with max size 4 by 4 by 1-1/2 in. (102 by 102 by 38 mm) deep flush device UL Listed Metallic Outlet Boxes installed with steel mud rings and with steel or plastic faceplates in 1 or 2 hr fire rated gypsum board wall assemblies constructed with min 3-1/2 in. (89 mm) wide wood or steel studs. When both protective materials are used with outlet boxes on both sides of the wall as directed, the boxes may be installed back-to-back provided that the backs of the boxes are minimum 1/2 in. (13 mm) apart and provided that the boxes are not interconnected. Adjoining pieces of moldable putty pads to be overlapped approx 1/2 in. (13 mm) at the seam. An insert pad shall be installed to completely cover the back inside surface of each outlet box.

Hilti Firestop Systems

Reproduced by HILTI, Inc. Courtesy of Underwriters Laboratories, Inc. December 07, 2016

Order Plans @ WWW.LDILine.com

No.	Description	Date

DISCLAIMER:
Meister Architects PC. is providing, by agreement with certain parties, materials stored electronically. The parties recognize that data, plans, specifications, reports, documents, or other information recorded on or transmitted as electronic media (including but not necessarily limited to "CAD documents") are subject to undetectable alteration, either intentional or unintentional, due to, among other causes, transmission, conversion, media degradation, software error, or human alteration. Accordingly, all such documents are provided to the parties for informational purposes only and not as an end product or as a record document. Any reliance thereon is deemed to be unreasonable and unenforceable. The signed and/or stamped hard copies of the Architect's Instruments of Service are the only true documents of record.

MEISTER·COX ARCHITECTS
INFO@MEISTER-COX.COM
PHONE: 610-375-1331 FAX: 610-375-4555
1522 PENN AVENUE WYOMISSING, PA 19610
WWW.MEISTER-COX.COM

HILTI FIRESTOP DETAILS

HOLIDAY INN EXPRESS & SUITES

INTERSECTION OF HAYNES PLACE & LAMM RD.
WILSON, NC 27893

STATUS:	BIDDING
PROJ. DATE:	06-07-19
PROJ. NO.	18-176
PRINTED:	6/7/2019 7:12:40 PM
DRAWN BY:	RFF
CHECKED BY:	TGC
SHEET NO.	A915
SCALE:	12" = 1'-0"

N:\Active Projects\Hospitality\2018 Holiday Inn Express - Wilson, NC\Drawings CAD-Revit\18-176.rvt