OPMD 0.0.02

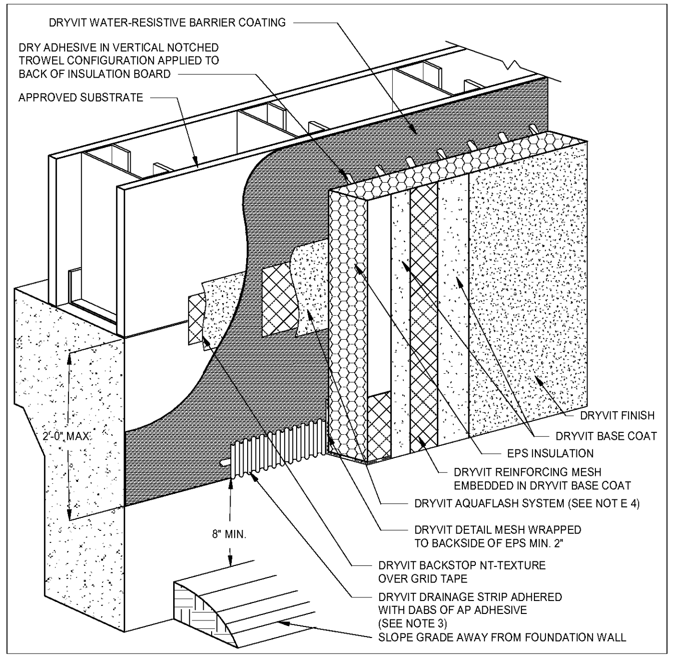

OUTSULATION®PLUS MD SYSTEM® — GRADE TERMINATION WITH DRAINAGE STRIP

NOTE:
1. DRYVIT RECOMMENDS THAT GROUND FLOOR APPLICATIONS AND ALL FACADES EXPOSED TO NORMAL STRESS, HIGH TRAFFIC, OR DELIBERATE IMPACT HAVE THE BASE COAT REINFORCED WITH PANZER MESH PRIOR TO STANDARD OR STANDARD PLUS MESH LOCATION OF HIGH IMPACT ZONES SHOULD BE INDICATED ON CONTRACT DRAWINGS.
2. EXPANSION JOINT IS REQUIRED ALONG TOP OF FOUNDATION OF 2'-0" DIMENSION IS EXCEEDED
3. ENSURE BOTTOM EDGE OF DRAINAGE STRIP IS LEFT FREE TO DRAIN
4. DRYVIT FLASHING TAPE SURFACE CONDITIONER AND DRYVIT FLASHING TAPE MAY BE USED IN LIEU OF DRYVIT AQUAFLASH SYSTEM

1 GRADE TERMINATION WITH DRAINAGE STRIP
12" = 1'-0"

OPMD 0.0.01

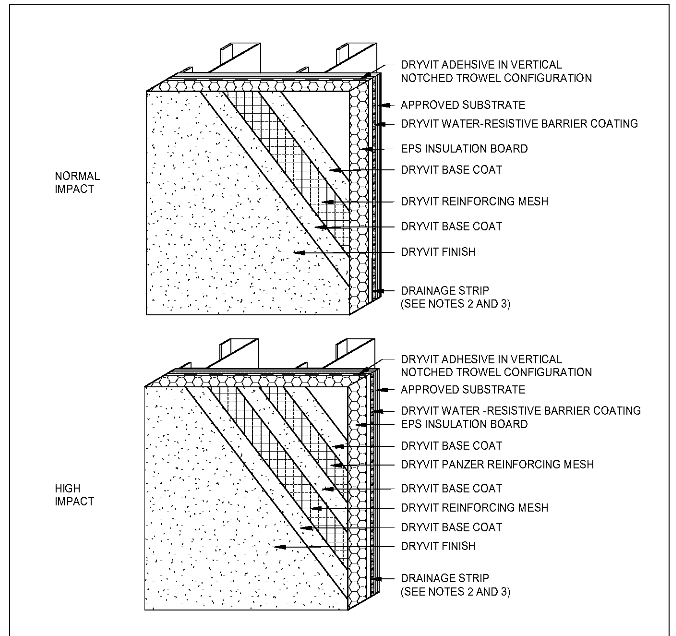

OUTSULATION®PLUS MD SYSTEM® — OUTSULATION PLUS MD SYSTEM

NOTE:
1. DRYVIT RECOMMENDS THAT GROUND FLOOR APPLICATIONS AND ALL FACADES EXPOSED TO NORMAL STRESS, HIGH TRAFFIC, OR DELIBERATE IMPACT HAVE THE BASE COAT REINFORCED WITH PANZER MESH PRIOR TO STANDARD OR STANDARD PLUS MESH LOCATION OF HIGH IMPACT ZONES SHOULD BE INDICATED ON CONTRACT DRAWINGS.
2. AS AN OPTION DRYVIT DRAINAGE TRACK CAN BE USED AT SYSTEM TERMINATION AT GRADE, REFER TO OPMD 0.0.03 FOR CONFIGURATION.
3. DRYVIT DRAINAGE TRACK SHOULD ONLY BE USED AT GRADE LEVEL TERMINATIONS.

2 OUTSULATION PLUS MD SYSTEM
12" = 1'-0"

OPMD 0.0.05

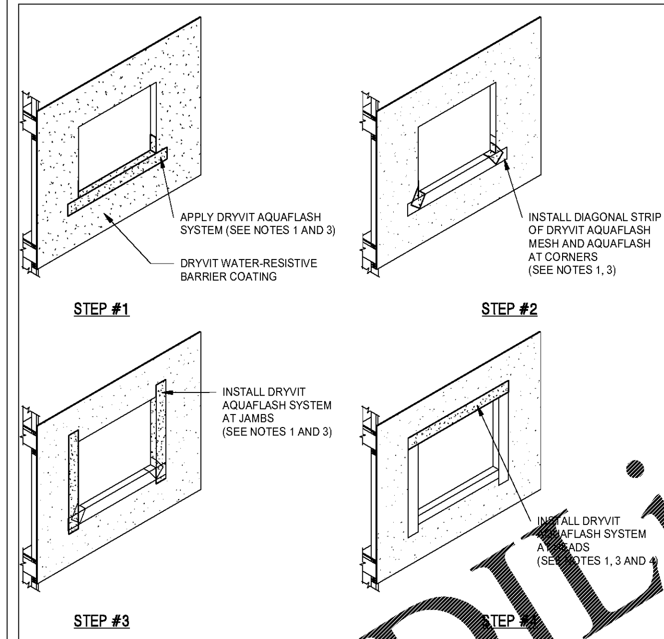

OUTSULATION®PLUS MD SYSTEM® — OPENING PREPARATION-BACKSTOP NT OPTION

NOTE:
1. DRYVIT AQUAFLASH SHALL EXTEND TO INTERIOR FACE OF OPENING.
2. REFER TO HEAD, SILL AND JAMB DETAILS FOR FLASHING CONFIGURATION.
3. DRYVIT FLASHING TAPE SURFACE CONDITIONER AND DRYVIT FLASHING TAPE MAY BE USED IN LIEU OF DRYVIT AQUAFLASH SYSTEM
4. INSTALL WINDOW UNIT AND ASSOCIATED FLASHINGS PER MANUFACTURER'S RECOMMENDATIONS, CODE REQUIREMENTS, AND PROJECT DOCUMENTS.

3 OPENING PREPARATION-AQUAFLASH SYSTEM OPTION
12" = 1'-0"

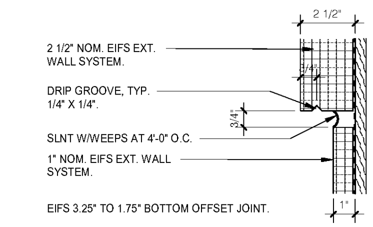

7 EIFS 1" TO 2 1/2" BOTTOM OFFSET JOINT
3" = 1'-0"

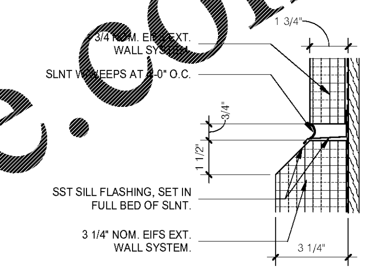

8 EIFS 3 1/4" TO 1 3/4" TOP OFFSET JOINT
3" = 1'-0"

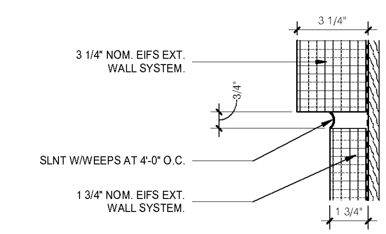

9 EIFS 2 1/2" TO 1" VERTICAL OFFSET JOINT
3" = 1'-0"

OPMD 0.0.06

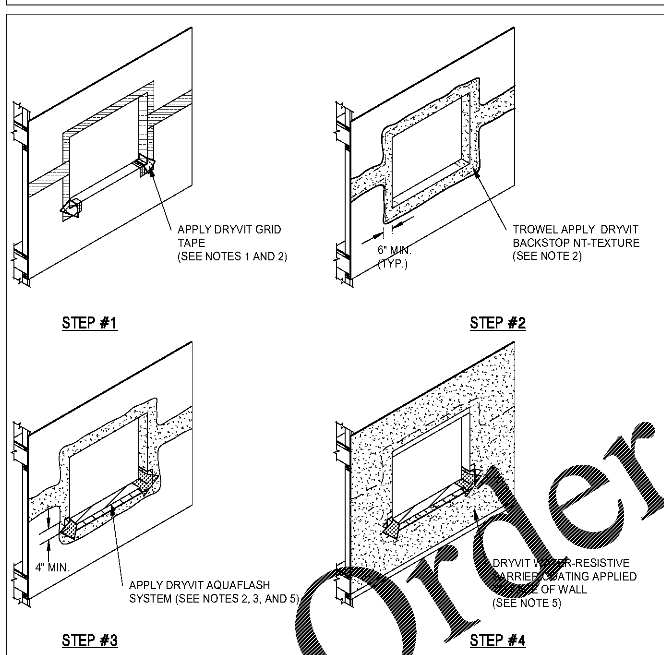

OUTSULATION®PLUS MD SYSTEM® — OPENING PREPARATION- BACKSTOP NT OPTION

NOTE:
1. APPLY DRYVIT GRID TAPE ON CORNERS OF OPENING AND SHEATHING JOINTS.
2. TROWEL APPLY DRYVIT BACKSTOP NT-TEXTURE OVER THE DRYVIT GRID TAPE ALL THE WAY TO INSIDE FACE OF OPENING. ALL VOIDS MUST BE FILLED; MULTIPLE PASSES MAY BE REQUIRED. AS AN OPTION, DRYVIT GRID TAPE AND DRYVIT BACKSTOP NT-TEXTURE MAY ALSO BE APPLIED AT THE SILL PRIOR TO DRYVIT AQUAFLASH SYSTEM OR FLASHING TAPE APPLICATION
3. DRYVIT FLASHING TAPE SURFACE CONDITIONER AND DRYVIT FLASHING TAPE MAY BE USED IN LIEU OF DRYVIT AQUAFLASH SYSTEM AT SILL, INCLUDING CORNER SPLICES.
4. INSTALL WINDOW UNIT AND ASSOCIATED FLASHINGS PER MANUFACTURER'S RECOMMENDATIONS, CODE REQUIREMENTS, AND PROJECT DOCUMENTATIONS.
5. REFER TO HEAD, SILL, AND JAMB DETAILS FOR FLASHING INTEGRATION.

4 OPENING PREPARATION-BACKSTOP NT OPTION
12" = 1'-0"

OPMD 0.0.07

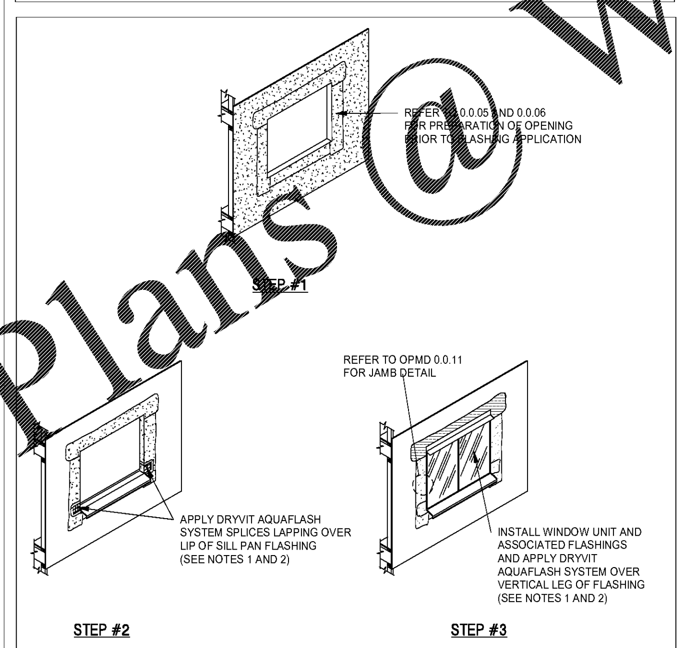

OUTSULATION®PLUS MD SYSTEM® — OPENING FLASHING INTERGRATION

NOTE:
1. REFER TO OPMD 0.0.08 AND 0.0.09 FOR INTEGRATION OF FLASHING
2. DRYVIT FLASHING TAPE SURFACE CONDITIONER AND DRYVIT FLASHING TAPE MAY BE USED IN LIEU OF DRYVIT AQUAFLASH SYSTEM.

5 OPENING FLASHING INTEGRATION
12" = 1'-0"

OPMD 0.0.08

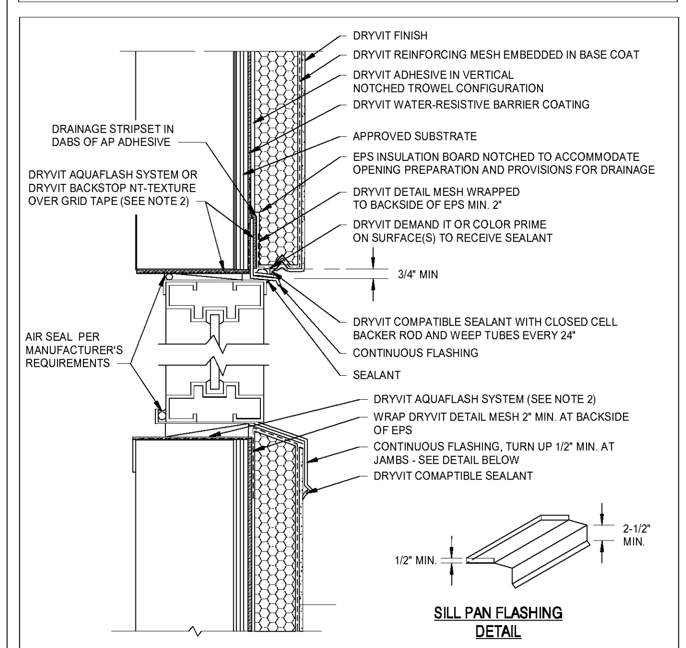

OUTSULATION®PLUS MD SYSTEM® — HEAD/SILL - STOREFRONT WINDOW

NOTE:
1. DRYVIT RECOMMENDS THAT GROUND FLOOR APPLICATIONS AND ALL FACADES EXPOSED TO ABNORMAL STRESS, HIGH TRAFFIC, OR DELIBERATE IMPACT HAVE THE BASE COAT REINFORCED WITH PANZER MESH PRIOR TO STANDARD OR STANDARD PLUS MESH. LOCATION OF HIGH IMPACT ZONES SHOULD IN INDICATED ON CONTRACT DRAWINGS.
2. DRYVIT FLASHING TAPE SURFACE CONDITIONER AND DRYVIT FLASHING TAPE MAY BE USED IN LIEU OF DRYVIT AQUAFLASH STSTEM.

6 HEAD/SILL- STOREFRONT WINDOW
12" = 1'-0"

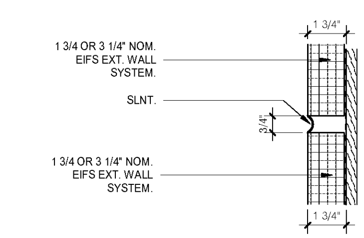

10 EIFS VERTICAL JOINT
3" = 1'-0"

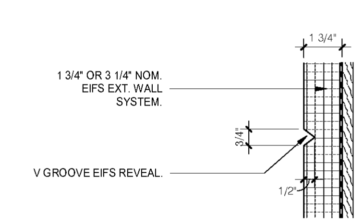

11 EIFS VERTICAL-HORIZONTAL REVEAL
3" = 1'-0"

No.	Description	Date

DISCLAIMER:
Meister Architects PC. is providing, by agreement with certain parties, materials stored electronically. The parties recognize that data, plans, specifications, reports, documents, or other information recorded on or transmitted as electronic media (including but not necessarily limited to "CAD documents") are subject to undetectable alteration, either intentional or unintentional, due to, among other causes, transmission, conversion, media degradation, software error, or human alteration. Accordingly, all such documents are provided to the parties for informational purposes only and not as an end product or as a record document. Any reliance thereon is deemed to be unreasonable and unenforceable. The signed and/or stamped hard copies of the Architect's Instruments of Service are the only true documents of record.

MEISTER·COX ARCHITECTS
INFO@MEISTER-COX.COM
PHONE: 610-375-1331 FAX: 610-375-4555
1522 PENN AVENUE WYOMISSING, PA 19610
WWW.MEISTER-COX.COM

TYPICAL EIFS DETAILS

HOLIDAY INN EXPRESS & SUITES
INTERSECTION OF HAYNES PLACE & LAMM RD.
WILSON, NC 27893

STATUS:	BIDDING
PROJ. DATE:	06-07-19
PROJ. NO.	18-176
PRINTED:	6/7/2019 7:12:12 PM
DRAWN BY:	RFF
CHECKED BY:	TGC
SHEET NO.	A701
SCALE:	As indicated

Holiday Inn Express & Suites

N:\Active Projects\Hospitality\2018 Holiday Inn Express - Wilson, NC\Drawings CAD-Revit\18-176.rvt

Order Plans @ WWW.LDILine.com