WALLS & PARTITIONS

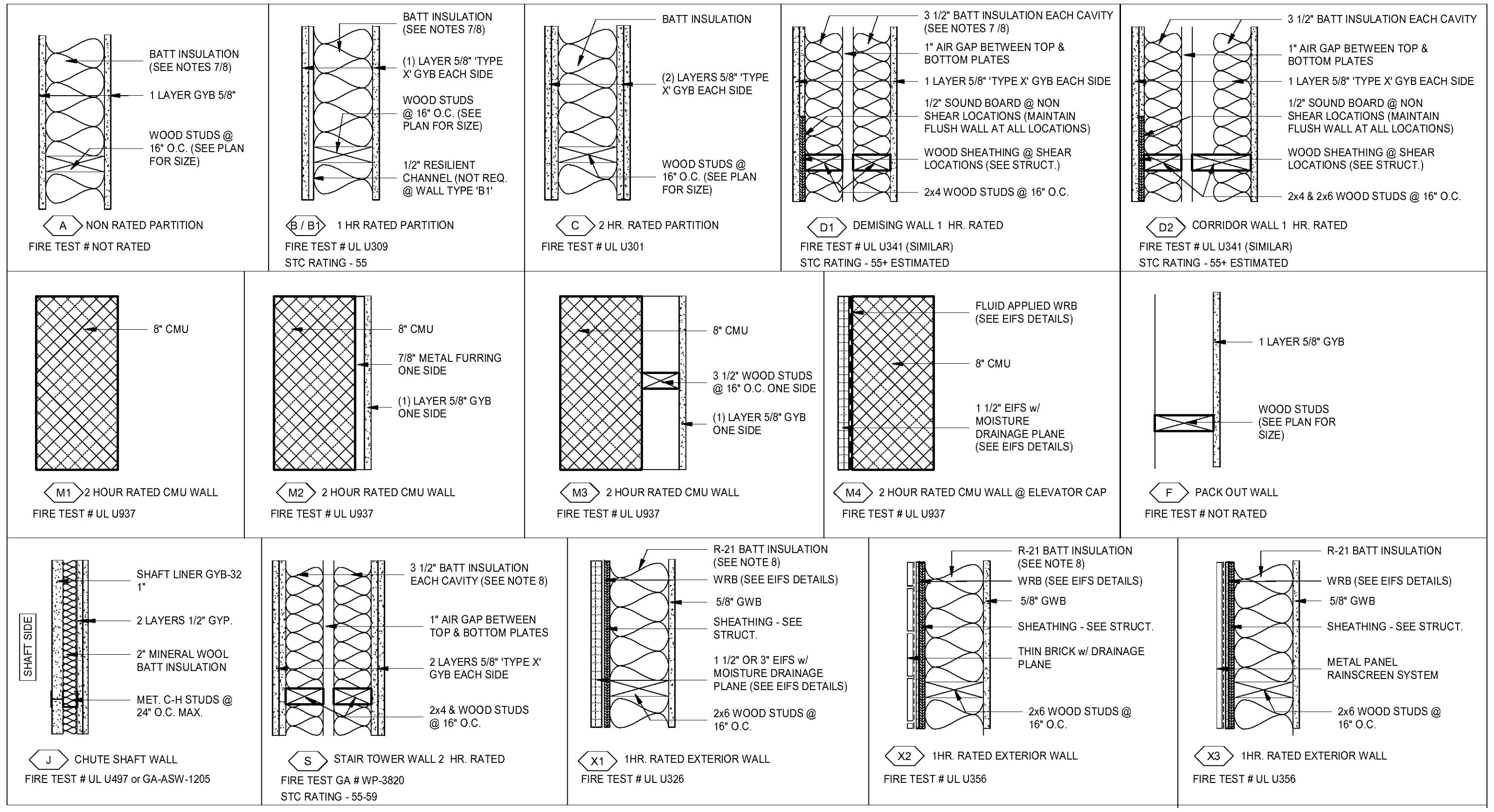

BEAMS & COLUMNS

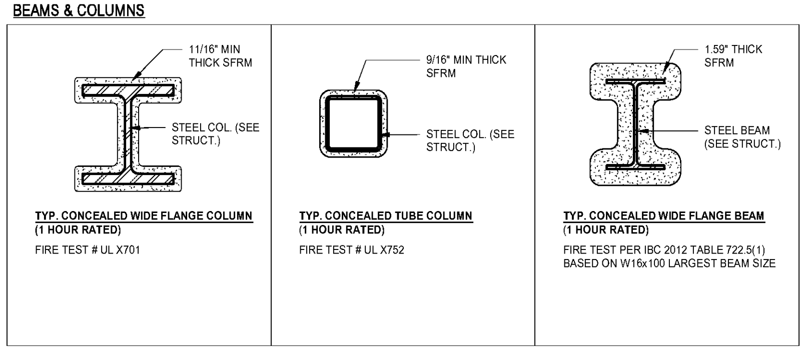

PARTITION TYPE NOTES:

1. PROVIDE 5/8" GYPBOARD (GYB) UNLESS NOTED OTHERWISE, EXCEPTIONS: PROVIDE 5/8" MOISTURE RESISTANT GYPBOARD CEILINGS AND WALLS AT BATHROOMS, TOILETS, PANTRY, POOL, POOL EQUIPMENT, POOL VESTIBULE AND HOUSEKEEPING AREAS INCLUDING 5/8" CEMENT BOARD 12" HIGH BASE.
2. REFER TO TYPICAL NON-LOAD BEARING INTERIOR PARTITION STUDS, TYPICAL NON-LOAD BEARING INTERIOR PARTITION BRACES, BACKING/BLOCKING SCHEDULE/NOTES AND PARTITION DEFLECTION DETAIL AT GYB PARTITIONS FOR PARTITION CONSTRUCTION.
3. PROVIDE SEALANT AT BASE OF ALL GYB PARTITIONS, SEE DETAIL 1C - THIS SHEET.
4. PROVIDE CONTROL JOINT DETAILS AT RATED AND NONE RATED WALLS EVENLY SPACED AT MAXIMUM 30'-0" SPACING. WHERE DOORS OCCUR IN THE WALL ALIGN JOINT WITH EDGE OF DOOR FRAME, UNO.
5. FOR BACKING AND BLOCKING INFORMATION REFER TO AND COMPLY WITH MANUFACTURERS INSTRUCTIONS AND SPECIFICATIONS, SEE ALSO BACKING/BLOCKING SCHEDULE/NOTES AND LOADING TABLES.
6. SEE STRUCTURAL DRAWINGS FOR LOCATIONS OF SHEAR SHEATHING AND FASTENER REQUIREMENTS.
7. SOUND BATT INSULATION IS NOT REQUIRED AT THE FOLLOWING LOCATIONS:
   A. ANY WING WALLS / WALLS WHICH DO NOT ENCLOSE A ROOM
   B. WALLS BETWEEN LUGGAGE STORAGE 100.6 AND BUSINESS CENTER 100.5
   C. WALLS BETWEEN SERVER 100.21 AND PUBLIC MEN'S AND WOMEN'S ROOMS R1 AND R2
   D. BETWEEN EQUIP. EQ1 AND LAUNDRY 100.15
   E. AROUND ELEC. EC1
   F. WALLS BETWEEN STORAGE 100.20 AND ELECTRICAL 100.19
   G. WALLS BETWEEN CONF. STORAGE 100.17A AND CONFERENCE ROOM A 100.17
   H. WALLS ENCLOSING CONFERENCE STORAGE 100.18A
8. USE OF BATT INSULATION OR LOOSE FILL INSULATION AT POOL IS PROHIBITED. USE MED. DENSITY CLOSED CELL SPRAY FOAM INSULATION.

FLOOR TYPES

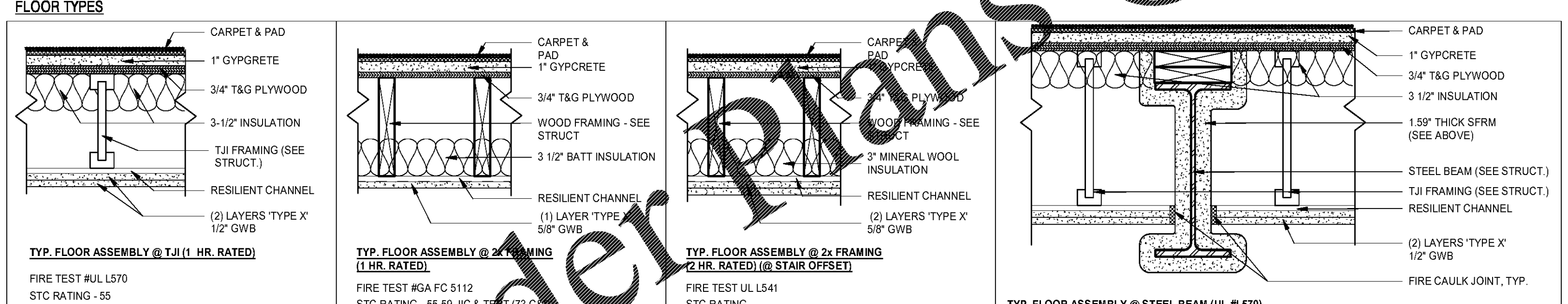

ROOF TYPES

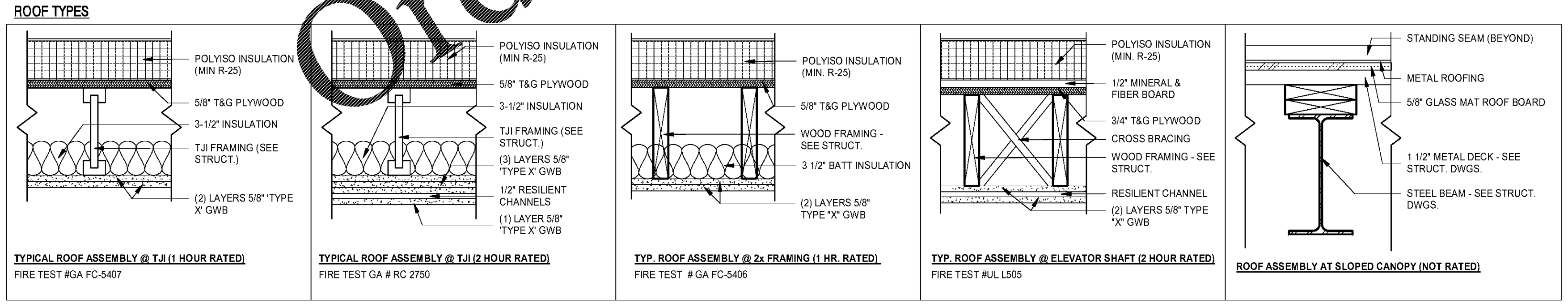

BACKING/BLOCKING SCHEDULE/NOTES.

1. PROVIDE BACKING/BLOCKING IN GYB PARTITIONS FOR ALL WALL-HUNG ITEMS.

2. THESE ANCHORING DETAILS ARE SHOWN AS TYPICAL AND ARE NOT INTENDED TO BE ALL INCLUSIVE. PROVIDE WOOD OR STEEL BACKING IN PARTITIONS FOR WALL HUNG ITEMS, SUCH AS WALL CABINETS, BLDG ACCESS, BATHROOM ACCESS, SHELVING, DOOR HOLD-OPENS, & STOPS, ETC, INCLUDING NIC, BY OWNER, BY OWNER FUTURE, & RELOCATE EXITING ITEMS.

3. USE THE FOLLOWING ASSUMED LOADS TO DETERMINE BLKG & FASTENER REQUIREMENTS UNLESS GREATER LOADS ARE KNOWN.
a. S DISP, PTC, TPH, MIRRORS, COAT HOOKS, BPG, TOWEL BAR & RING, MOP HOLDER, ASH URN, ETC-USE 100lbs MOP HOLDER, ASH URN ETC - USE 100 LB.
b. HANDRAIL, BUMPER RAILS - USE 200 LB CONCENTRATED LOAD.
c. GRAB BARS - USE 250 LB CONCENTRATED LOAD.
d. WALL CABINETS - USE WEIGHT OF CABINET PLUS 100LB PER FOOT OF SHELF.
e. COUNTERTOPS- USE WEIGHT OF COUNTER TOP PLUS 55 LB PER FOOT OF COUNTER
f. 12" ADJ SHELVES - USE 40 LB PER BRKT
g. 18" ADJ SHELVES - USE 55 LB PER BRKT
h. 24" ADJ SHELVES - USE 83 LB PER BRKT

LOADING TABLE NOTES:
1. SEE TABLE 1 BELOW FOR SIZE OF WOOD BLKG, QUANTITY AND SIZE OF SCREWS FOR CONNECTION TO EACH STUD.

2. SEE TABLE 2 OR 3 BELOW FOR QUANTITY AND SIZE OF SCREWS FOR CONNECTION OF WALL HUNG ITEMS, IF NOT ALREADY PROVIDED BY MFR OF WALL HUNG ITEM.

TABLE 1

MAXIMUM ALLOWABLE LOAD-IN POUNDS				
WOOD SCREW		LENGTH OF WALL HUNG ITEM		
QUAN.	SIZE	1'-4" OR LESS	2'-8" OR LESS	2'-9" OR MORE
2x4 WOOD BLOCKING				
2	#6	160	320	480
2	#8	240	480	700
2	#10	320	640	700
2x6 WOOD BLOCKING				
3	#6	240	480	700
3	#8	360	700	700
3	#10	480	700	700

LOADS BASED ON GROUP II WOOD SPECIES & SCREWS EMBEDED IN WOOD A MIN OF 7 TIMES THE SCREW DIA WITH SCREWS INSERTED IN SIDE GRAIN ON ONE SIDE & SIDE GRAIN ON OPPOSITE END.

TABLE 3

MAXIMUM ALLOWABLE LOAD-IN POUNDS				
SCREW SIZE	QUANTITY OF SCREWS			
	2	3	4	5
#6-S12	224	336	448	560
#8-18	236	354	472	[illegible]
#10-16	272	[illegible]	584	700
#12-14	288	[illegible]	576	700

LOADS BASED ON PUBLISHED DATA FOR MILCOR TITE-LOCK SCREWS WITH 20 GA STEEL BACKING AND LIMITING CRITERIA BEING PULLOUT STRENGTH

TABLE 2

MAXIMUM ALLOWABLE LOAD-IN POUNDS				
SCREW SIZE	QUANTITY OF SCREWS			
	2	3	4	5
[illegible]	[illegible]	[illegible]	300	375
[illegible]	[illegible]	318	424	530
#10	286	429	572	700
#12	370	555	700	700

LOADS BASED ON GROUP II WOOD SPECIES & SCREWS EMBEDDED IN WOOD A MIN OF 7 TIMES THE SCREW DIA WITH SCREWS INSERTED IN SIDE GRAIN.

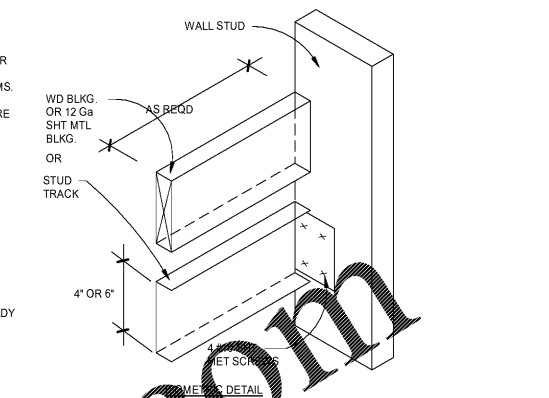

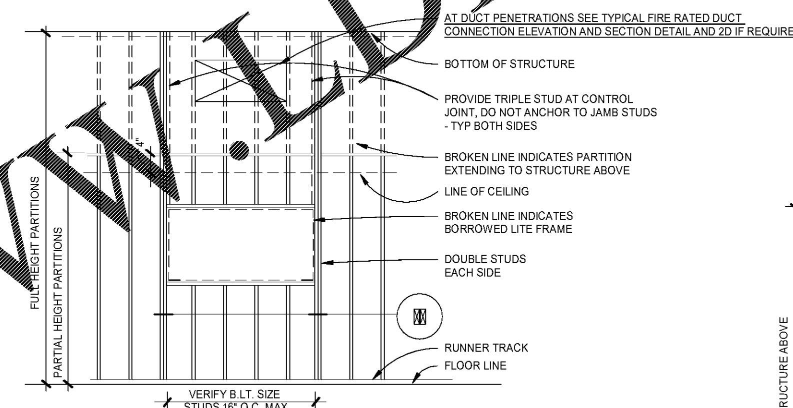

WINDOW/BORROWED LIGHT OPENING TYPICAL FRAMING ELEVATION

FRAMING NOTE, SEE ALSO STRUCTURAL DRAWINGS FOR ADDITIONAL REQUIREMENTS.

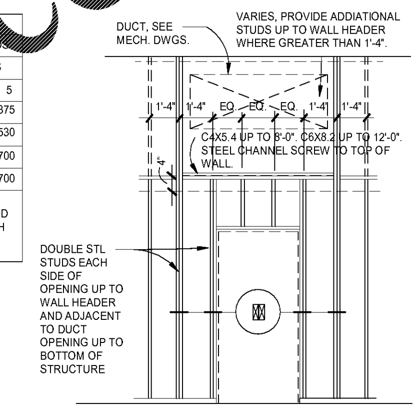

DOOR OPENING TYPICAL FRAMING ELEVATION WITH DUCT ABOVE. WINDOW SIMILAR.

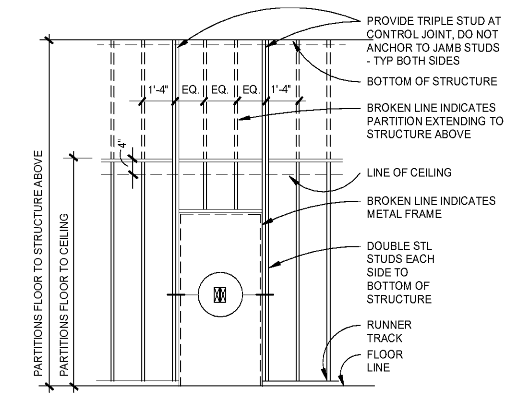

DOOR OPENING TYPICAL FRAMING ELEVATION

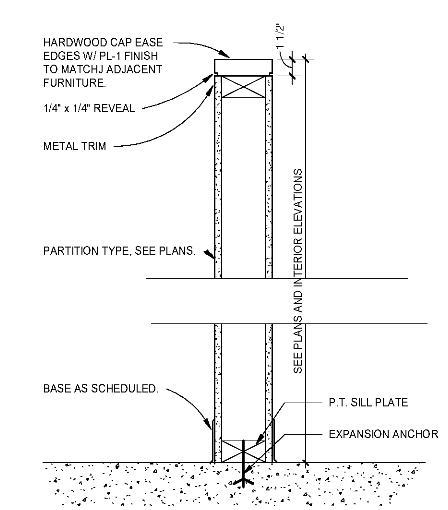

3 PARTITION LOW HEIGHT WALL
1 1/2" = 1'-0"

NOTES:

- IT IS THE CONTRACTOR'S RESPONSIBILITY TO COORDINATE THE ROUTING OF ALL DUCKWORK, CONDUITS, AND PIPING IN THE BUILDING TO MAINTAIN THE INTEGRITY OF THE STRUCTURE. IN ADDITION, FIRESTOPPING, FIRE SAFING, AND ALL PENETRATIONS MUST BE COORDINATED TO MAINTAIN WALL, FLOOR, AND ROOF RATINGS. THE CONTRACTOR SHALL PROVIDE A SCHEDULE OF MATERIALS AND LOCATIONS OF WHERE THEY WILL BE INSTALLED IN THE STRUCTURE.
- CORNER GUARDS SHALL BE INSTALLED ON ALL OUTSIDE CORNERS OF WALLS AND CASED OPENINGS FOR THE FULL HEIGHT OF THE WALL. THE COLOR OF THE CORNER GUARD SHALL MATCH THE WALL COVERING. CLEAR PLASTIC GUARDS ARE NOT ALLOWED.

No.	Description	Date

DISCLAIMER:
Meister Architects PC. is providing, by agreement with certain parties, materials stored electronically. The parties recognize that data, plans, specifications, reports, documents, or other information recorded on or transmitted as electronic media (including but not necessarily limited to "CAD documents") are subject to undetectable alteration, either intentional or unintentional, due to, among other causes, transmission, conversion, media degradation, software error, or human alteration. Accordingly, all such documents are provided to the parties for informational purposes only and not as an end product or as a record document. Any reliance thereon is deemed to be unreasonable and unenforceable. The signed and/or stamped hard copies of the Architect's Instruments of Service are the only true documents of record.

MEISTER·COX ARCHITECTS
INFO@MEISTER-COX.COM
PHONE: 610-375-1331 FAX: 610-375-4555
1522 PENN AVENUE WYOMISSING, PA 19610
WWW.MEISTER-COX.COM

WALL / FLOOR ASSEMBLIES & DETAILS

HOLIDAY INN EXPRESS & SUITES
INTERSECTION OF HAYNES PLACE & LAMM RD.
WILSON, NC 27893

STATUS:	BIDDING
PROJ. DATE:	06-07-19
PROJ. NO.	18-176
PRINTED:	6/7/2019 7:12:00 PM
DRAWN BY:	RFF
CHECKED BY:	TGC
SHEET NO.	A700
SCALE:	1 1/2" = 1'-0"

N:\Active Projects\Hospitality\2018 Holiday Inn Express - Wilson, NC\Drawings CAD-Revit\18-176.rvt