CONTACTS

GOVERNMENTAL AGENCIES

DEPT.: PLANNING DEPARTMENT
NAME: MANATEE COUNTY PLANNING DIVISION
ADDRESS: 1112 MANATEE AVE W
BRADENTON, FL 34205
CONTACT: DOROTHY RAINEY – Dorothy.Rainey@mymanatee.org
PHONE: (941) 748–4501 ext 6851

DEPT.: ZONING DEPARTMENT
NAME: MANATEE COUNTY PLANNING DIVISION
ADDRESS: 1112 MANATEE AVE W
BRADENTON, FL 34205
CONTACT: DOROTHY RAINEY – Dorothy.Rainey@mymanatee.org
PHONE: (941) 748–4501 ext 6851

DEPT.: BUILDING DEPARTMENT
NAME: MANATEE COUNTY BUILDING & PERMITTING
ADDRESS: 1112 MANATEE AVE WEST
BRADENTON, FL 34205
CONTACT: SAMUEL ACOSTA – Samuel.Acosta@mymanatee.org
PHONE: (941) 748–4501

DEPT.: FIRE MARSHAL
NAME: PARRISH FIRE DISTRICT
ADDRESS: 12132 US 301 NORTH
PARRISH, FL 34219
CONTACT: MIKE JOHNSON – admin@parishfd.org
PHONE: (941) 721–2093

DEPT.: PLUMBING
NAME: MANATEE COUNTY BUILDING & PERMITTING
ADDRESS: 1112 MANATEE AVE WEST
BRADENTON, FL 34205
CONTACT: SAMUEL ACOSTA – Samuel.Acosta@mymanatee.org
PHONE: (941) 748–4501

DEPT.: SANITARY SEWER
NAME: MANATEE COUNTY PUBLIC WORKS ENGINEERING
ADDRESS: 1022 26TH AVE EAST
BRADENTON, FL 34208
CONTACT: THOMAS CADY – Thomas.Cady@mymanatee.org
PHONE: (941) 708–7450 ext 7654

DEPT.: WATER
NAME: MANATEE COUNTY PUBLIC WORKS ENGINEERING
ADDRESS: 1022 26TH AVE EAST
BRADENTON, FL 34208
CONTACT: THOMAS CADY – Thomas.Cady@mymanatee.org
PHONE: (941) 708–7450 ext 7654

DEPT.: STORM DRAINAGE
NAME: MANATEE COUNTY PUBLIC WORKS ENGINEERING
ADDRESS: 1022 26TH AVE EAST
BRADENTON, FL 34208
CONTACT: KENNETH KOHN – Kenneth.Kohn@mymanatee.org
PHONE: (941) 708–7497

DEPT.: SERVICE UTILITIES – ELECTRIC
NAME: FLORIDA POWER AND LIGHT (FP&L)
ADDRESS: 1253 12TH AVE EAST
PALMETTO, FL 34221
CONTACT: NYLES PETERSON
PHONE: (941) 723–4425

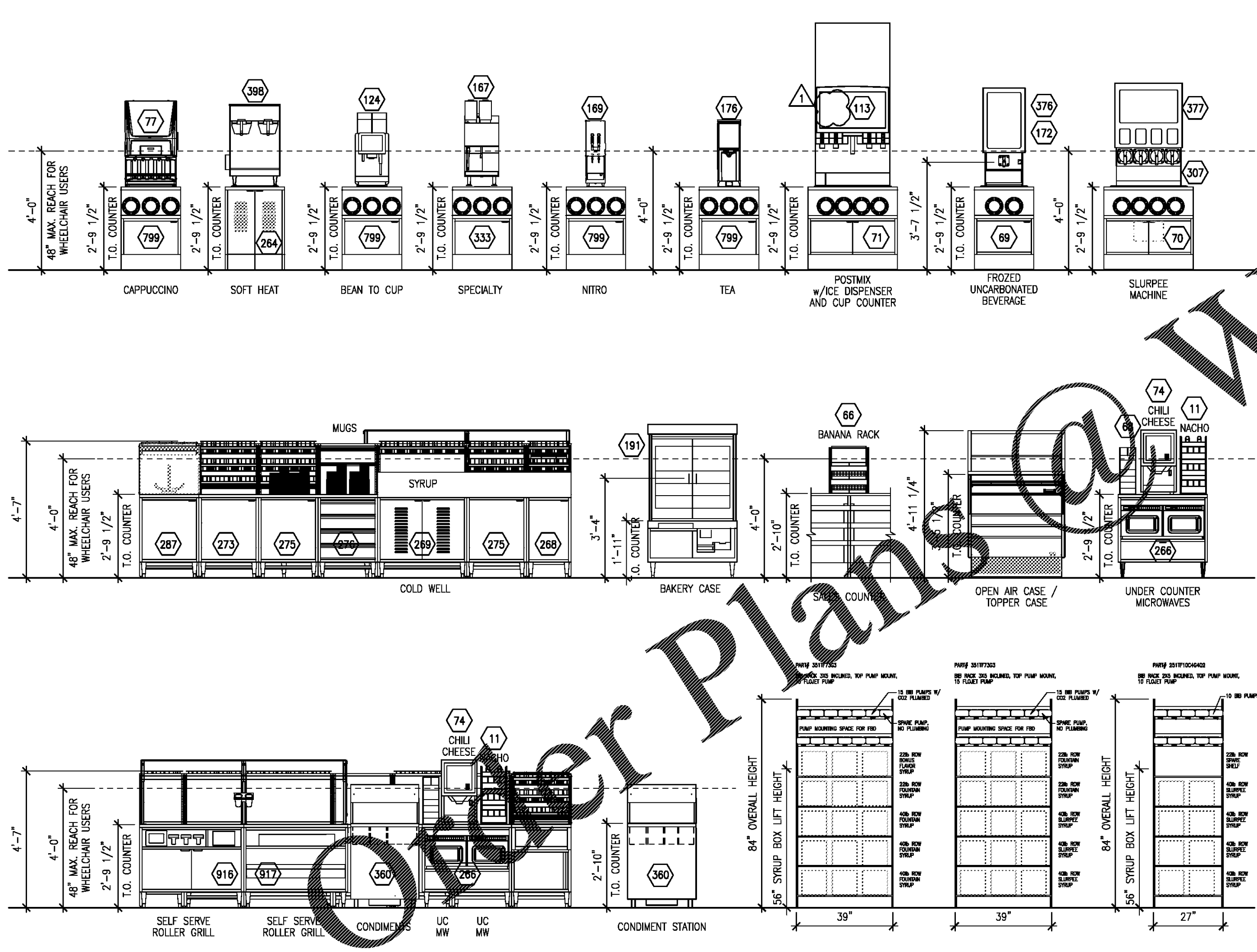

1 EQUIPMENT ELEVATIONS 3/8" = 1'-0"

7-11_EQUIP ELEV_(2018)

PROJECT NOTES

1. ALL CONTRACTORS AND SUBCONTRACTORS WILL THOROUGHLY FAMILIARIZE THEMSELVES WITH THESE CONSTRUCTION DOCUMENTS AND WILL VERIFY EXISTING SITE AND CONDITIONS PRIOR TO SUBMITTING A BID. ALL SUBCONTRACTORS WILL PROVIDE ALL LABOR, SUPERVISION, AND MATERIALS OF EVERY TYPE WHICH MAY BE NECESSARY FOR A SUCCESSFUL COMPLETION. ALL WORK TO BE PERFORMED IN A GOOD AND WORKMANLIKE MANNER ACCORDING TO THE TRUE INTENT AND MEANING OF THE DRAWINGS AND SPECIFICATIONS.
2. THIS ARCHITECT AND HIS PROFESSIONAL CONSULTANTS WILL NOT HAVE CONTROL, OF AND WILL NOT BE RESPONSIBLE FOR, CONSTRUCTION MEANS, METHODS, TECHNIQUES, SEQUENCES, PROCEDURES, OR SAFETY PRECAUTIONS AND PROGRAMS IN CONNECTION WITH THE WORK ON THIS PROJECT OR FOR THE ACTS OR OMISSIONS OF THE CONTRACTOR, SUBCONTRACTOR, OR ANY OTHER PERSONS PERFORMING ANY OF THE WORK ON THIS SITE, NOR FOR THE FAILURE OF ANY OF THEM TO CARRY OUT THE WORK IN ACCORDANCE WITH THE INTENT OF THE CONTRACT AND OR CONSTRUCTION DOCUMENTS.
3. ALL CONTRACTORS WILL PROVIDE ADEQUATE BRACING AND/OR SHORING TO INSURE STRUCTURAL STABILITY OF THE BUILDING AND ALL RELATED BUILDING COMPONENTS IE: STRUCTURAL WALLS, INTERIOR WALL ASSEMBLIES, ETC. DURING THE CONSTRUCTION PHASE OF THIS PROJECT.
4. WORK WILL BE COORDINATED WITH ALL TRADES IN ORDER TO AVOID INTERFERENCE, AND AVOID OMISSIONS.
5. ALL MATERIALS USED WILL BE NEW AND BEAR U.L. LABELS WHERE REQUIRED AND MEET APPROPRIATE N.E.M.A. STANDARDS.
6. LAYOUT ALL PARTITIONS BEFORE BEGINNING CONSTRUCTION TO PREVENT ERRORS BY DISCREPANCY. ALL DRYWALL PARTITIONS WILL BE INSTALLED AS NOTED ON THE DRAWINGS.
7. EACH SUBCONTRACTOR WILL AMEND AND MAKE GOOD AT HIS OWN COST, ANY DEFECTS OR OTHER FAULTS IN HIS WORKMANSHIP AND/OR HIS SUPPLIED MATERIALS.
8. ALL CONTRACTORS WILL GUARANTEE ALL LABOR AND MATERIALS FOR A PERIOD OF ONE YEAR FROM DATE OF OCCUPANCY.
9. VERIFY ALL DIMENSIONS IN THE FIELD PRIOR TO ORDERING, CUTTING AND/OR INSTALLING MATERIAL, PRODUCT OR EQUIPMENT. IN THE EVENT OF ANY DISCREPANCIES, CONTACT THE CONSTRUCTION MANAGER BEFORE PROCEEDING WITH THAT WORK.
10. ALL SUBCONTRACTORS WILL PROVIDE A CERTIFICATE OF INSURANCE TO THE CONSTRUCTION MANAGER PRIOR TO STARTING ANY WORK ON THIS PROJECT. CERTIFICATE OF INSURANCE CANNOT BE TERMINATED OR CANCELED WITHOUT 10 DAYS PRIOR WRITTEN NOTICE TO THE OWNER.
11. ANY ADDITIONS OR CHANGES TO WORK MUST BE AUTHORIZED IN WRITING BY THE CONSTRUCTION MANAGER. NO ALTERATIONS WILL BE MADE ON THIS PROJECT EXCEPT UPON WRITTEN ORDER BY THE CONSTRUCTION MANAGER.
12. NO SUBSTITUTIONS OF ANY KIND FOR MATERIALS SPECIFIED ON THESE CONSTRUCTION DOCUMENTS IS ALLOWED. NO "EQUIVALENT" SUBSTITUTIONS WILL BE MADE, UNLESS DUE TO THE LACK OF AVAILABILITY OF THE ORIGINAL MATERIAL SPECIFIED AND APPROVED IN WRITING BY 7–ELEVEN, INC. CONSTRUCTION MANAGER.
13. WEATHER CONDITIONS: CONTRACTORS WILL PROTECT ALL PARTS OF THEIR WORK FROM WEATHER DAMAGE DUE TO FROST, RAIN, HEAT, ETC. AND WILL MAKE GOOD TO THE SATISFACTION OF THE CONSTRUCTION MANAGER AND/OR GENERAL CONTRACTOR ANY PORTION OF THE WORK WHICH MAY HAVE BECOME DAMAGED.
14. RESPONSIBILITY OF CONTRACTOR: EACH SUBCONTRACTOR IS RESPONSIBLE FOR WORKMANSHIP AND MATERIALS. EACH SUBCONTRACTOR IS RESPONSIBLE FOR THE CARE AND PROTECTION OF HIS OWN WORK AND MATERIALS.
15. SITE SAFETY: EACH CONTRACTOR WILL ABIDE BY LOCAL AREA STANDARDS AND RELATED OSHA STANDARDS FOR THE PROTECTION AND SAFETY FOR THEIR EMPLOYEES ON SITE. THIS ARCHITECT AND HIS PROFESSIONAL CONSULTANTS WILL BE HELD HARMLESS BY THE OWNER, GENERAL CONTRACTOR AND RELATED AWARDED TRADES ON THIS PROJECT FOR ACCIDENTS OR INJURIES CAUSED OR ACCRUED ON THIS PROPERTY DURING THE PRE/ACTUAL/POST CONSTRUCTION PHASES OF THIS PROJECT.
16. PILFERAGE: EACH CONTRACTOR WILL BE RESPONSIBLE FOR HIS OWN EQUIPMENT AND MATERIALS USED IN CONSTRUCTION INCLUDING THOSE ITEMS, FURNISHED BY THE OWNER, AND DELIVERED TO THE JOB SITE, TO BE INSTALLED BY THE CONTRACTOR. THE OWNER WILL NOT BE HELD LIABLE FOR STOLEN EQUIPMENT, MATERIALS OR DAMAGE OF THE SAME ON THIS JOB SITE.
17. LIENS: ALL SUBCONTRACTORS AND THE GENERAL CONTRACTOR WILL DELIVER TO THE OWNER, A COMPLETE RELEASE OF ALL CLAIMS ARISING OUT OF THIS CONTRACT.
18. GENERAL CONTRACTOR WILL BE RESPONSIBLE FOR REMOVAL OF DEBRIS ACCUMULATED BY EACH TRADE. HOWEVER, EACH TRADE WILL KEEP THE JOB SITE CLEAN AND SAFE AT ALL TIMES, ALONG WITH A BROOM FINISH AT THE END OF EACH WORKING DAY.
19. SCHEDULE OF WORK: THE 7–ELEVEN INC. CONSTRUCTION MANAGER WILL STATE, TO THE GENERAL CONTRACTOR DURING THE BIDDING PROCESS, THE REQUIRED NUMBER OF CALENDAR DAYS TO COMPLETE THIS WORK.

CODE / PROJECT DATA

1. APPLICABLE CODE REFERENCE:
   2017 FLORIDA BUILDING CODE 6TH EDITION – BUILDING
   2017 FLORIDA BUILDING CODE 6TH EDITION – PLUMBING
   2017 FLORIDA BUILDING CODE 6TH EDITION – MECHANICAL
   2014 NATIONAL ELECTRIC CODE 6TH EDITION – ELECTRICAL
   2017 FLORIDA FIRE PREVENTION CODE 6TH EDITION – FIRE/LIFE SAFETY
   2015 NFPA 1 & NFPA 101 FL EDITION
   ADAAG FLORIDA STATE ACCESSIBILITY CODE – ACCESSIBILITY
2. OCCUPANCY CLASSIFICATION: MERCANTILE (GROUP 'M')
3. BUILDING TYPE: RETAIL CONVENIENCE STORE
   CONSTRUCTION CLASSIFICATION:
   TABLE 503 OF THE 2017 FBCB:
   TYPE V–B: UNPROTECTED / UNSPRINKLERED
   MAXIMUM AREA ALLOWED = 9000 S.F. PER TABLE 503 OF THE 2017 FBCB.
4. AREA:
   7–11 GROSS ENCLOSED BUILDING AREA: 4,087 S.F.
   COVERED ENTRY AREA: 211 S.F.
5. FIRE PROTECTIVE REQUIREMENTS: TABLE 601/602 OF THE 2017 FBC:

EXTERIOR BRG. WALLS:	0 HRS.
INTERIOR BRG.WALLS:	0 HRS.
COLUMNS:	0 HRS.
BEAMS:	0 HRS.
FLOOR:	0 HRS.
ROOF:	0 HRS.

TYPE V–B/ MAX OP'G	
OVER 5' TO 10' TO PROP. LINE:	1 HRS. (0%)
OVER 10' TO 20' TO PROP. LINE:	0 HRS. (10'–15': 15%; 15'– 20': 25%)
OVER 20' TO 30' TO PROP. LINE:	0 HRS. (20'–25': 45%; 25'–30': 70%)
OVER 30' TO PROP. LINE:	0 HRS. (NL)

6. OCCUPANT LOAD ANALYSIS (2017 FL. FIRE PREVENTION CODE 6TH ED. NFPA 101)

MERCHANDISE	2,540/ 30 = 85
SALES	297/100 = 3
OFFICE	56/100 = 1
WORK ROOM	413/300 = 1
COOLER VAULT	388/300 = 1
BEER CAVE	237/300 = 1

   TOTAL OCCUPANT LOAD = 92 PEOPLE
7. MINIMUM NUMBER OF EXITS: 2 REQUIRED AND 2 PROVIDED.
   EGRESS WIDTH REQUIRED = .2 X OCCUPANT LOAD
   = .2 X 92 = 18.4 INCHES
   EGRESS WIDTH PROVIDED = 102 INCHES
   MAXIMUM TRAVEL DISTANCE TO AN EXIT:
   DOES NOT EXCEED 200' (UNSPRINKLED CRITERIA)
   FIRE EXTINGUISHERS: PROVIDE (2) 4A,60–BC F.E., BRACKET MOUNTED–
   VERIFY LOCATIONS W/ LOCAL FIRE INSPECTOR.
8. ROOF LOADS
   LIVE LOAD: 20 PSF
   DEAD LOAD: 25 PSF
9. WIND VELOCITY: 150 (ULT) MPH/ 108 MPH (ASD) WITH 3 SEC. GUST
   EXPOSURE CATEGORY: C
   RISK CATEGORY: II
   INTERNAL PRESSURE COEFFICIENT: 0.18
   WIND PRESSURES: SEE STRUCTURAL DWG. SHEET S3.1 FOR MORE INFORMATION.
10. OCCUPANT LOAD ANALIYSIS (CHAPTER 10 FBC) FOR PLUMBING FIXTURE CALCS:

MERCHANDISE	2,540/ 60 = 42
SALES	297/100 = 3
OFFICE	56/100 = 1
WORK ROOM	413/300 = 1
COOLER VAULT	388/300 = 1
BEER CAVE	237/300 = 1

   TOTAL OCCUPANT LOAD = 49 PEOPLE
   TOILET FIXTURE COUNT: SEPARATE FACILITIES PROVIDED
   54 OCCUPANTS/2 = (24.5 MALES, 24.5 FEMALES)
   WATER CLOSETS
   24/500 = .048 (1 WATER CLOSET) REQUIRED – FOR MEN
   (1 WATER CLOSET) REQUIRED – FOR WOMEN
   (2) WATER CLOSET (ADA ACCESSIBLE) PROVIDED
   LAVATORIES
   49/750 = .065 (1 LAVATORY) REQUIRED – FOR MEN
   (1 LAVATORY) REQUIRED – FOR WOMEN
   (2) LAVATORY (ADA ACCESSIBLE) PROVIDED
11. MECHANICAL, ELECTRICAL AND PLUMBING:
    SEE MECHANICAL, ELECTRICAL AND PLUMBING DRAWINGS
12. MISCELLANEOUS:
    HAND SINK IS PROVIDED IN MERCHANDISING AREA
13. DRINKING FOUNTAIN:
    ADA ACCESSIBLE HI–LO DRINKING FOUNTAIN PROVIDED IN MERCHANDISING AREA.

ABBREVIATIONS

AC	AIR CONDITIONING
AFF	ABOVE FINISH FLOOR
AHU	AIR HANDLING UNIT
AL	ALUMINUM
ASPH	ASPHALT
AT	ALUMINUM THRESHOLD
BD	BOARD
BLKT	BLANKET
CJ	CONTROL JOINT
CLG	CEILING
CMU	CONCRETE MASONRY UNIT
COL	COLUMN
CONC	CONCRETE
CONT	CONTINUOUS
CPT	CARPET
CT	CERAMIC TILE
C/L	CENTER LINE
DBL	DOUBLE
DF	DRINKING FOUNTAIN
DIA	DIAMETER
DIM	DIMENSION
DN	DOWN
DS	DOWN SPOUT
EA	EACH
EJ	EXPANSION JOINT
ELEC	ELECTRICAL
ELEV / EL	ELEVATION
EQ	EQUAL
EXIST	EXISTING
FD	FLOOR DRAIN
FE	FIRE EXTINGUISHER
FF	FINISH FLOOR
FR	FIRE RATED
GALV	GALVANIZED
GYPBD	GYPSUM BOARD
HC	HANDICAPPED
HDW	HARDWARE
HM	HOLLOW METAL
HVAC	HEATING, AIR CONDITIONING, & VENT
INFO	INFORMATION
INSUL	INSULATION
LAC	LAY–IN ACOUSTICAL CEILING
MAS	MASONRY
MAX	MAXIMUM
MECH	MECHANICAL
MFGR / MFR	MANUFACTURER
MIN	MINIMUM
MO	MASONRY OPENING
MR	MIRROR/MOISTURE RESISTANT
MT	MARBLE THRESHOLD
MTL	METAL
NA	NOT APPLICABLE
NIC	NOT IN CONTRACT
NOM	NOMINAL
NTS	NOT TO SCALE
OC	ON CENTER
OPP	OPPOSITE
PLYWD	PLYWOOD
PREFAB	PREFABRICATED
PSF	POUNDS PER SQUARE FOOT
PT	PAINT / PRESSURE TREATED
QT	QUARRY TILE
R	RISER/RADIUS
REBAR	REINFORCING BAR
REF	REFERENCE
REINF	REINFORCE
REQ'D	REQUIRED
RO	ROUGH OPENING
SB	SPLASHBLOCK
SHLVS	SHELVES
SIM	SIMILAR
SPEC	SPECIFICATION
SS	STAINLESS STEEL
STL	STEEL
STOR	STORAGE
SUSP	SUSPENDED
T	TREAD
TELE	TELEPHONE
TPD	TOILET PAPER DISPENSER
TYP	TYPICAL
UNO	UNLESS NOTED OTHERWISE
VCT	VINYL COMPOSITION TILE
VERT	VERTICAL
VT	VINYL THRESHOLD
WC	WATER CLOSET
WD	WOOD
WP	WATERPROOF
WWF	WELDED WIRE FABRIC
W/	WITH

GENERAL NOTES

A. GENERAL

1. REFER TO STRUCTURAL, MECHANICAL, ELECTRICAL, AND PLUMBING DRAWINGS FOR ADDITIONAL GENERAL NOTES, ABBREVIATIONS, AND SYMBOLS.
2. DETAILS SHOWN ARE TYPICAL IN NATURE AND ARE INDICATIVE OF PROFILES AND TYPES REQUIRED FOR THE WORK. REMAINDER OF THE WORK IS SIMILAR IN CHARACTER TO THESE DETAILS.
3. MATERIALS AND SYSTEMS NOTES ARE TYPICAL IN NATURE AND APPLY TO MULTIPLE DRAWINGS. NOTES ON ANY ONE DRAWING ARE TO APPLY TO ALL OTHER SIMILAR MATERIALS AND SYSTEMS UNLESS NOTED OTHERWISE.
4. ELEVATIONS REFERENCED ON ARCHITECTURAL DRAWINGS ARE TOP OF SLAB LEVELS UNLESS NOTED OTHERWISE.
5. COORDINATE FLOOR AND WALL PENETRATIONS, SLEEVES AND MECHANICAL SHAFTS WITH TRADE'S CONTRACTORS, INCLUDING BUT NOT LIMITED TO, MECHANICAL, ELECTRICAL, PLUMBING AND FIRE PROTECTION CONTRACTORS.
6. REFER TO SITE GRADING PLAN TO DETERMINE EXTENT OF EXTERIOR FINISHES OR SPLIT FACED BLOCK BELOW FINISHED FLOOR.

B. FIRE RATINGS

1. A FIRE RATING INDICATED FOR A WALL OR PARTITION IS FOR THE ENTIRE LENGTH AND HEIGHT OF THE WALL.
2. FIRE RATINGS INDICATED MUST COMPLY WITH THE UNDERWRITERS LABORATORIES TESTS AND AS ACCEPTABLE BY THE APPLICABLE BUILDING CODES AND REGULATIONS.
3. FIRE STOP OPENINGS IN THE FLOOR SLAB AND/OR RATED WALLS, INCLUDING SPACES BETWEEN SLAB EDGE AND EXTERIOR WALL, SPACES BETWEEN DUCTS, CONDUITS, PIPING AND OTHER PENETRATIONS. (EXCEPT WHEN COMPLETELY ENCLOSED BY FIRE RATED CONSTRUCTION) TO MAINTAIN THE CONTINUITY OF THE FIRE RATING OF FLOOR OR WALL CONSTRUCTION AND TO PREVENT THE PASSAGE OF SMOKE.

C. DIMENSIONING

1. ALL DIMENSIONS ARE IN FEET–INCHES UNLESS NOTED OTHERWISE.
2. DIMENSIONS GOVERN. DO NOT SCALE DRAWINGS.
3. VERIFY DIMENSIONS IN THE FIELD BEFORE PROCEEDING WITH THE WORK. NOTIFY THE ARCHITECT OF ANY DISCREPANCIES.
4. EXTERIOR WALLS ARE DIMENSIONED TO THE EXTERIOR FINISHED FACE OF WALL UNLESS NOTED OTHERWISE.
5. INTERIOR WALLS AND PARTITIONS ARE DIMENSIONED TO ONE FINISHED FACE UNLESS NOTED OTHERWISE.
6. DOORS ARE LOCATED BY THEIR JAMB DETAIL RELATIVE TO ADJACENT WALLS AND PARTITIONS. DOOR OPENINGS ARE DIMENSIONED TO THE STRIKE OR HINGE FACE OF THE DOOR FRAMES.

D. MISCELLANEOUS

1. SEAL EXTERIOR JOINTS AROUND DOORS, WINDOWS AND LOUVER FRAMES AND AT PENETRATIONS OF MECHANICAL, ELECTRICAL, PLUMBING AND FIRE PROTECTION ELEMENTS TO PREVENT THE AIR AND WATER LEAKAGE.
2. ISOLATE DISSIMILAR METALS EFFECTIVELY FROM EACH OTHER TO PREVENT ELECTROLYTIC ACTION.
3. COORDINATE SIZES AND LOCATIONS OF EQUIPMENT BASES AND HOUSEKEEPING PADS.
4. PROVIDE ACCESS PANELS AS REQUIRED FOR MECHANICAL, ELECTRICAL, PLUMBING AND FIRE PROTECTION EQUIPMENT.

SYMBOLOGY / LEGEND

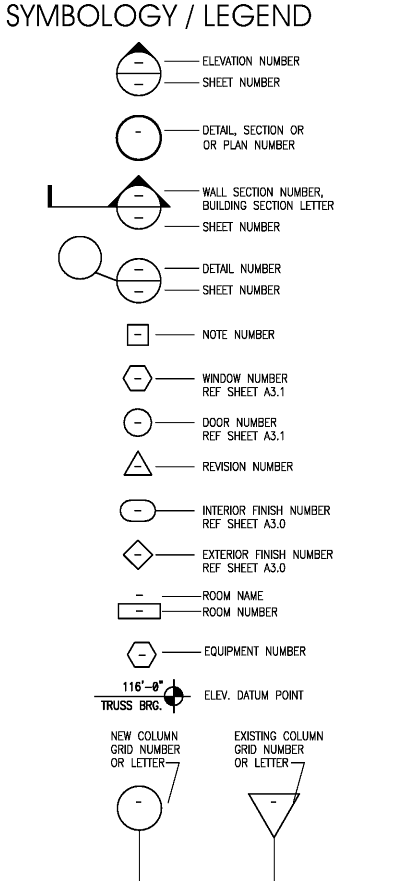

INTERPLAN LLC
ARCHITECTURE
ENGINEERING
INTERIOR DESIGN
PROJECT MANAGEMENT

AA 003420
CA 8660

604 COURTLAND STREET
SUITE 100
ORLANDO, FLORIDA 32804
PH 407.645.5008
FX 407.629.9124

SEAL:

THIS DOCUMENT IS NOT FOR REGULATORY APPROVAL, PERMITTING, OR CONSTRUCTION.

NO	DATE	REMARKS
1	03.18.19	PEER COMMENTS

REVISIONS

BID SET
JUNE 27, 2019

7-ELEVEN
STORE #38777
12060 US 301 N
PARRISH, FL
34219

PROJECT NO: 2018.0891
DATE: FEBRUARY 26, 2019

A1.0
ARCHITECTURAL DATA SYMBOLS AND ABBREVIATIONS
CHECKED: RW DRAWN: JUM

COPYRIGHT © 2019 INTERPLAN LLC. RESERVES COPYRIGHT & OTHER RIGHTS RESTRICTING THESE DOCUMENTS TO THE ORIGINAL SITE OR PURPOSE FOR WHICH THEY WERE PREPARED. REPRODUCTIONS, CHANGES OR ASSIGNMENTS ARE PROHIBITED.

Order Plans @ WWW.LDILine.com