StormTrap®

MODULAR CONCRETE STORMWATER MANAGEMENT

THESE DRAWINGS ARE FOR YOUR REFERENCE ONLY AND SHALL NOT BE USED FOR CONSTRUCTION PURPOSES. THE STORMTRAP DRAWINGS SHALL NOT BE ALTERED OR MANIPULATED IN WHOLE OR IN PART WITHOUT WRITTEN CONSENT OF STORMTRAP. USE OF THESE DRAWINGS IS STRICTLY GRANTED TO YOU, OUR CLIENT, FOR THE SPECIFIED AND NAMED PROJECT ONLY.

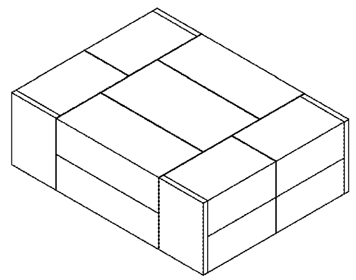

GRADY CASS - North Basin 2
ATLANTA , GA

SHEET INDEX

PAGE	DESCRIPTION
0.0	COVER SHEET
1.0	DOUBLETRAP DESIGN CRITERIA
2.0	DOUBLETRAP SYSTEM LAYOUT
3.0	DOUBLETRAP INSTALLATION SPECIFICATIONS
3.1	DOUBLETRAP INSTALLATION SPECIFICATIONS
4.0	DOUBLETRAP BACKFILL SPECIFICATIONS
5.0	RECOMMENDED PIPE / ACCESS OPENING SPECIFICATIONS
6.0	DOUBLETRAP MODULE TYPES

STORMTRAP CONTACT INFORMATION

STORM TRAP SUPPLIER: STORMTRAP
CONTACT NAME: MICHAEL MCDONALD
CELL PHONE: 470-775-0805
SALES EMAIL: MCDONALD@STORMTRAP.COM

StormTrap®
1287 WINDHAM PARKWAY
ROMEOVILLE, IL 60446
P:815-941-4549 / F:331-318-5347

ENGINEER INFORMATION:
EBERLY & ASSOCIATES
2951 FLOWERS RD S
SUITE 119
ATLANTA, GA
770-452-7849

PROJECT INFORMATION:
GRADY CASS
NORTH BASIN 2
ATLANTA, GA

CURRENT ISSUE DATE: 5/23/2019

ISSUED FOR: PRELIMINARY

REV.	DATE:	ISSUED FOR:	DWN BY:
1	5/23/2019	PRELIMINARY	BS

SCALE: NTS

SHEET TITLE: COVER SHEET

SHEET NUMBER: 0.0

STRUCTURAL DESIGN LOADING CRITERIA

LIVE LOADING:	AASHTO HS-20 HIGHWAY LOADING
GROUND WATER TABLE:	BELOW INVERT OF SYSTEM
SOIL BEARING PRESSURE:	3000 PSF
SOIL DENSITY:	120 PCF
EQUIVALENT UNSATURATED LATERAL ACTIVE EARTH PRESSURE:	35 PSF / FT.
EQUIVALENT SATURATED LATERAL ACTIVE EARTH PRESSURE:	80 PSF/FT. (IF WATER TABLE PRESENT)
APPLICABLE CODES:	ASTM C857 ACI-318
BACKFILL TYPE:	SEE SHEET 4.0 FOR BACKFILL OPTIONS

STORMTRAP SYSTEM INFORMATION

WATER STORAGE PROV: 4,501.41 CUBIC FEET
UNIT HEADROOM: 8' - 4" DOUBLETRAP
UNIT QUANTITY: 14 TOTAL UNITS

SITE SPECIFIC DESIGN CRITERIA

1. STORMTRAP UNITS SHALL BE MANUFACTURED AND INSTALLED ACCORDING TO SHOP DRAWINGS APPROVED BY THE INSTALLING CONTRACTOR AND ENGINEER OF RECORD. THE SHOP DRAWINGS SHALL INDICATE SIZE AND LOCATION OF ROOF OPENINGS AND INLET/ OUTLET PIPE TYPES, SIZES, INVERT ELEVATIONS AND SIZE OF OPENINGS.
2. COVER RANGE: MIN. 1.05' MAX. 6.00' CONSULT STORMTRAP FOR ADDITIONAL COVER OPTIONS.
3. ALL DIMENSIONS AND SOIL CONDITIONS, INCLUDING BUT NOT LIMITED TO GROUNDWATER AND SOIL BEARING CAPACITY ARE REQUIRED TO BE VERIFIED IN THE FIELD BY OTHERS PRIOR TO STORMTRAP INSTALLATION.
4. FOR STRUCTURAL CALCULATIONS THE GROUND WATER TABLE IS ASSUMED TO BE BELOW INVERT OF SYSTEM. IF WATER TABLE IS DIFFERENT THAN ASSUMED, CONTACT STORMTRAP.
5. SYSTEM DESIGN INTENT IS TO CONTAIN WATER AND / OR PREVENT GROUNDWATER MIGRATION INTO THE SYSTEM AND WILL NOT BE SUBJECT TO LEAKAGE TESTING. A THIRD PARTY WATER PROOFING SOLUTION IS REQUIRED FOR SEALING OF SYSTEM / MODULE JOINTS AND SEAMS. SOLUTION TO BE PROVIDED AND INSTALLED BY CONTRACTOR IN ACCORDANCE WITH SUPPLIER'S PRODUCT SPECIFICATIONS.

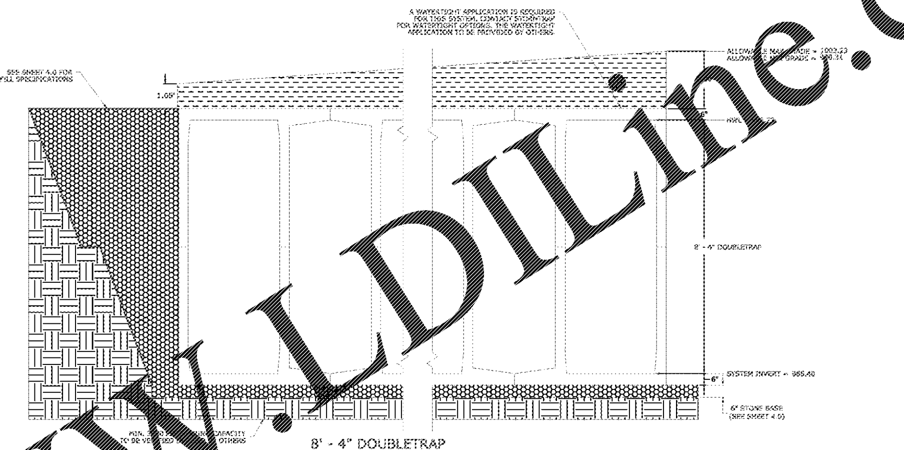

StormTrap®
1287 WINDHAM PARKWAY
ROMEOVILLE, IL 60446
P:815-941-4549 / F:331-318-5347

ENGINEER INFORMATION:
EBERLY & ASSOCIATES
2951 FLOWERS RD S
SUITE 119
ATLANTA, GA
770-452-7849

PROJECT INFORMATION:
GRADY CASS
NORTH BASIN 2
ATLANTA, GA

CURRENT ISSUE DATE: 5/23/2019

ISSUED FOR: PRELIMINARY

REV.	DATE:	ISSUED FOR:	DWN BY:
1	5/23/2019	PRELIMINARY	BS

SCALE: NTS

SHEET TITLE: DOUBLETRAP DESIGN CRITERIA

SHEET NUMBER: 1.0

BILL OF MATERIALS

QTY.	UNIT TYPE	DESCRIPTION	TOP WEIGHT	BASE WEIGHT
1	I	8' - 4" DOUBLETRAP	14984	14782
0	II	8' - 4" DOUBLETRAP	16835	15833
2	III	8' - 4" DOUBLETRAP	14358	14157
0	IV	8' - 4" DOUBLETRAP	15283	15182
0	VII	8' - 4" DOUBLETRAP	13726	13726
4	SPIV	8' - 4" DOUBLETRAP	VARIES	VARIES
4	PANEL	8" THICK PANELS	8186	
2	JOINT WRAP	150' PER ROLL		
16	JOINT TAPE	13.5' PER ROLL		

LOADING DISCLAIMER:

STORMTRAP IS NOT DESIGNED TO ACCEPT ANY ADDITIONAL LOADINGS FROM NEARBY STRUCTURES NEXT TO OR OVER THE TOP OF STORMTRAP. IF ADDITIONAL LOADING CONSIDERATIONS ARE REQUIRED FOR STRUCTURAL DESIGN OF STORMTRAP, PLEASE CONTACT STORMTRAP IMMEDIATELY.

DESIGN CRITERIA
ALLOWABLE MAX GRADE = 1003.23
ALLOWABLE MIN GRADE = 998.31
INSIDE HEIGHT ELEVATION = 996.73
SYSTEM INVERT = 988.40

NOTES:
1. DIMENSIONING OF STORMTRAP SYSTEM SHOWN BELOW ALLOW FOR A 3/4" GAP BETWEEN EACH MODULE.
2. ALL DIMENSIONS TO BE VERIFIED IN THE FIELD BY OTHERS.
3. SEE SHEET 3.0 FOR INSTALLATION SPECIFICATIONS.
4. SP - INDICATES A MODULE WITH MODIFICATIONS.
5. P - INDICATES A MODULE WITH A PANEL ATTACHMENT.
6. CONTRACTORS RESPONSIBILITY TO ENSURE CONSISTENCY/ACCURACY TO FINAL ENGINEER OF RECORD PLAN SET.

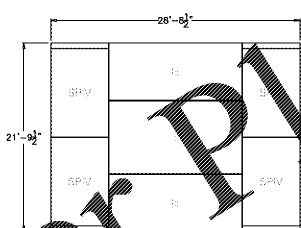

StormTrap®
1287 WINDHAM PARKWAY
ROMEOVILLE, IL 60446
P:815-941-4549 / F:331-318-5347

ENGINEER INFORMATION:
EBERLY & ASSOCIATES
2951 FLOWERS RD S
SUITE 119
ATLANTA, GA
770-452-7849

PROJECT INFORMATION:
GRADY CASS
NORTH BASIN 2
ATLANTA, GA

CURRENT ISSUE DATE: 5/23/2019

ISSUED FOR: PRELIMINARY

REV.	DATE:	ISSUED FOR:	DWN BY:
1	5/23/2019	PRELIMINARY	BS

SCALE: NTS

SHEET TITLE: DOUBLETRAP SYSTEM LAYOUT

SHEET NUMBER: 2.0

STORMTRAP INSTALLATION SPECIFICATIONS

1. STORMTRAP SHALL BE INSTALLED IN ACCORDANCE WITH ASTM C891, STANDARD FOR INSTALLATION OF UNDERGROUND PRECAST CONCRETE UTILITY STRUCTURES, THE FOLLOWING ADDITIONS AND/OR EXCEPTIONS SHALL APPLY:
2. IT IS THE RESPONSIBILITY OF THE INSTALLING CONTRACTOR TO ENSURE THAT PROPER/ADEQUATE EQUIPMENT IS USED TO SET/INSTALL THE MODULES.
3. STORMTRAP MODULES CAN BE PLACED ON A LEVEL, 6" FOUNDATION OF ¾" AGGREGATE EXTENDING 2'-0" PAST THE OUTSIDE OF THE SYSTEM (SEE DETAIL 1) AND SHALL BE PLACED ON PROPERLY COMPACTED SOILS (SEE SHEET 1.0 FOR SOIL BEARING CAPACITY REQUIREMENTS), AND IN ACCORDANCE WITH ASTM C891 STANDARD PRACTICE FOR INSTALLATION OF UNDERGROUND PRECAST UTILITY STRUCTURES.
4. THE STORMTRAP MODULES SHALL BE PLACED SUCH THAT THE MAXIMUM SPACE BETWEEN ADJACENT MODULES DOES NOT EXCEED ¾" (SEE DETAIL 2). IF THE SPACE EXCEEDS ¾", THE MODULES SHALL BE RESET WITH APPROPRIATE ADJUSTMENT MADE TO LINE AND GRADE TO BRING THE SPACE INTO SPECIFICATION.
5. STORMTRAP MODULES ARE NOT WATERTIGHT. IF A WATERTIGHT SOLUTION IS REQUIRED, CONTACT STORMTRAP FOR RECOMMENDATIONS. THE WATERTIGHT APPLICATION IS TO BE PROVIDED AND IMPLEMENTED BY THE CONTRACTOR. THE CONTRACTOR IS RESPONSIBLE TO ENSURE THAT THE SELECTED WATERTIGHT SOLUTION PERFORMS AS SPECIFIED BY THE MANUFACTURER.
6. THE PERIMETER HORIZONTAL JOINT BETWEEN THE TOP AND BASE LEG CONNECTION OF THE STORMTRAP MODULES SHALL BE SEALED WITH PREFORMED MASTIC JOINT TAPE ACCORDING TO ASTM C891, 8.9 AND 8.12. (SEE DETAIL 3). THE MASTIC JOINT TAPE DOES NOT PROVIDE A WATERTIGHT SEAL.
7. ALL EXTERIOR JOINTS BETWEEN ADJACENT STORMTRAP MODULES SHALL BE SEALED WITH 8" WIDE PRE-FORMED, COLD-APPLIED, SELF-ADHERING ELASTOMERIC RESIN, BONDED TO A WOVEN, HIGHLY PUNCTURE RESISTANT POLYMER WRAP, CONFORMING TO ASTM C891 AND SHALL BE INTEGRATED WITH PRIMER SEALANT AS APPROVED BY STORMTRAP (SEE DETAILS 3 & 4). THE JOINT WRAP DOES NOT PROVIDE A WATERTIGHT SEAL. THE SOLE PURPOSE OF THE JOINT WRAP IS TO PROVIDE A SILT AND SOIL TIGHT SYSTEM. THE ADHESIVE EXTERIOR JOINT WRAP SHALL BE INSTALLED ACCORDING TO THE FOLLOWING INSTALLATION INSTRUCTIONS:
   - 7.1. USE A BRUSH OR WET CLOTH TO THOROUGHLY CLEAN THE OUTSIDE SURFACE AT THE POINT WHERE JOINT WRAP IS TO BE APPLIED.
   - 7.2. A RELEASE PAPER PROTECTS THE ADHESIVE SIDE OF THE JOINT WRAP. PLACE THE ADHESIVE TAPE (ADHESIVE SIDE DOWN) AROUND THE STRUCTURE, REMOVING THE RELEASE PAPER AS YOU GO. PRESS THE JOINT WRAP FIRMLY AGAINST THE STORMTRAP MODULE SURFACE WHEN APPLYING.
8. IF THE CONTRACTOR NEEDS TO CANCEL ANY SHIPMENTS, THEY MUST DO SO 48 HOURS PRIOR TO THEIR SCHEDULED ARRIVAL AT THE JOB SITE. IF CANCELED AFTER THAT TIME, PLEASE CONTACT THE PROJECT MANAGER.
9. IF THE STORMTRAP MODULE(S) IS DAMAGED IN ANY WAY PRIOR, DURING, OR AFTER INSTALL, STORMTRAP MUST BE CONTACTED IMMEDIATELY TO ASSESS THE DAMAGE AND TO DETERMINE WHETHER OR NOT THE MODULE(S) WILL NEED TO BE REPLACED. IF ANY MODULE ARRIVES AT THE JOBSITE DAMAGED DO NOT UNLOAD IT; CONTACT STORMTRAP IMMEDIATELY. ANY DAMAGE NOT REPORTED BEFORE THE TRUCK IS UNLOADED WILL BE THE CONTRACTOR'S RESPONSIBILITY.
10. STORMTRAP MODULES CANNOT BE ALTERED IN ANY WAY AFTER MANUFACTURING WITHOUT WRITTEN CONSENT FROM STORMTRAP.

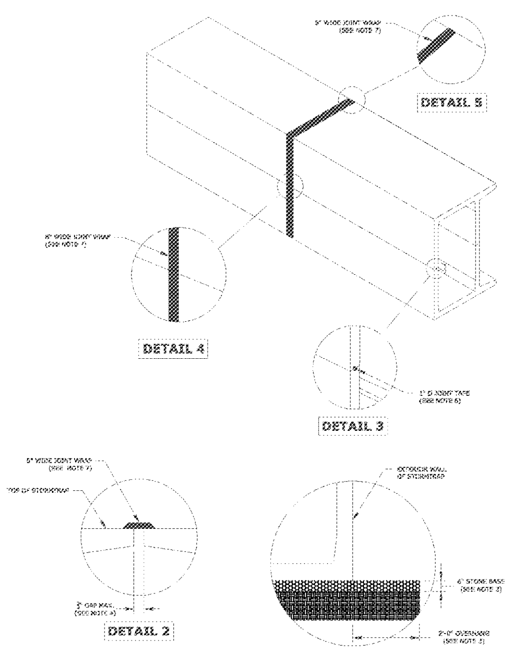

StormTrap®
1287 WINDHAM PARKWAY
ROMEOVILLE, IL 60446
P:815-941-4549 / F:331-318-5347

ENGINEER INFORMATION:
EBERLY & ASSOCIATES
2951 FLOWERS RD S
SUITE 119
ATLANTA, GA
770-452-7849

PROJECT INFORMATION:
GRADY CASS
NORTH BASIN 2
ATLANTA, GA

CURRENT ISSUE DATE: 5/23/2019

ISSUED FOR: PRELIMINARY

REV.	DATE:	ISSUED FOR:	DWN BY:
1	5/23/2019	PRELIMINARY	BS

SCALE: NTS

SHEET TITLE: DOUBLETRAP INSTALLATION SPECIFICATIONS

SHEET NUMBER: 3.0

Order Plans @ WWW.LDILine.com

1 CONSTRUCTION DETAILS
NTS

Grady

Project
THE CENTER FOR ADVANCED SURGICAL SERVICES (CASS)
80 GILMER STREET SE
ATLANTA, GA 30303

Prepared For
GRADY HEALTH SYSTEM
80 JESSE HILL DR. SE
ATLANTA, GA 30303

Hellmuth, Obata & Kassabaum, Inc.
133 Peachtree Street, NE, Suite 4800
Atlanta, GA 30303 USA
t +1 404 439 9000 f +1 404 439 9001

All reproduction & intellectual property rights reserved © 2019

In Association with

Eberly & Associates, Inc.
CIVIL ENGINEERING
2951 Flowers Road South, Suite 119
Atlanta, GA 30341

Key Plan

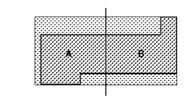

Professional Seals

NOT FOR CONSTRUCTION

No.	Description	Date
1	DD - GMP	2019-07-03

Project No: 18.16013.00

Sheet Title
CONSTRUCTION DETAILS

Original is 30 x 42. Do not scale contents of this drawing.

Sheet Number
C706