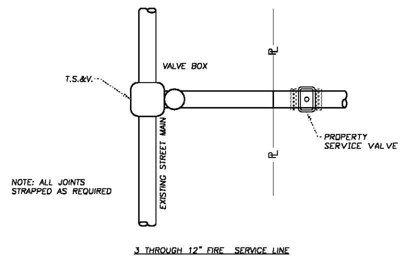

BILL OF MATERIAL
1.) T.S.&V.
2.) 1-VALVE BOX
3.) 10'-8" D.I.P. SHORT
4.) 40'-8" D.I.P. LONG

NOTE:
FOR WATER MAIN IN SIDEWALK METER MAY BE INSTALLED PARALLEL WITH WATER MAIN.

IF INSUFFICIENT AREA EXISTS WITHIN PUBLIC RIGHT-OF-WAY, A METER EASEMENT MUST BE PROVIDED.

NOTE: THIS DRAWING FOR DESIGN INFORMATION ONLY UWSA FORCES WILL INSTALL ALL DETECTORS CHECK VALVES.

THIS DETAIL WAS TAKEN FROM THE CITY OF ATLANTA'S WEBSITE. IT MAY HAVE BEEN MODIFIED AND SHOULD BE REVIEWED THOROUGHLY.

City of Atlanta | STANDARD DETAILS | TYPICAL FIRE-SERVICE INSTALLATION | REV. DATE: OCT. 2011 | ORIG. DATE: NOV. 2004 | SCALE: N.T.S. | DETAIL NO. WR-G_SV003

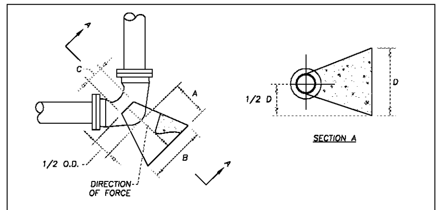

NOTE:
ENGINEER SHALL VERIFY SOIL CONDITION BEFORE THRUST BLOCK DESIGN IS IMPLEMENTED.

DESIGN DATA:
DIMENSION OF THRUST BLOCK IN FEET BASED ON 2000 POUNDS PER SQUARE FOOT SOIL BEARING PRESSURE AND 250 PER SQUARE INCH TEST PRESSURE. ACTUAL INSIDE DIAMETER OF DUCTILE IRON PIPE, CLASS 2 USED AS STANDARD.

CONCRETE SHALL BE CLASS A,3000 P.S.I. HIGH EARLY.

MINIMUM DIMENSIONS IN FEET FOR CONCRETE BLOCKING

BEND	SIZE	A	B	C	D	VOLUME CUBIC YARD
11 1/4°	6"	1.0	1.0	7"	1.0	0.03
	8"	1.0	1.25	7"	1.0	0.04
	12"	1.0	2.0	11"	2.0	0.1
	16"	2.0	3.0	15"	2.0	0.3
	20"	2.0	3.0	19"	3.0	0.5
	24"	3.0	4.0	22"	3.0	0.8
22 1/2°	6"	1.0	1.5	7"	1.0	0.04
	8"	1.0	2.0	7"	2.0	0.1
	12"	2.0	3.0	11"	2.0	0.3
	16"	2.0	4.0	15"	3.0	0.6
	20"	3.0	5.0	19"	3.0	0.1
	24"	4.0	6.0	22"	4.0	2.3
45°	6"	1.5	2.0	7"	1.5	0.11
	8"	2.0	3.0	7"	2.0	0.3
	12"	2.0	4.0	11"	3.0	0.7
	16"	3.0	5.0	15"	4.0	1.4
	20"	4.0	6.0	19"	5.0	2.8
	24"	5.0	8.0	22"	6.0	5.0

BEND	SIZE	A	B	C	D	VOLUME CUBIC YARD
90°	6"	1.75	2.5	7"	2.0	0.2
	8"	2.0	3.0	7"	3.0	0.4
	12"	4.0	6.0	11"	4.0	2.1
	16"	4.0	7.0	15"	5.0	3.1
	20"	5.0	8.0	19"	7.0	5.3
	24"	6.0	10.0	22"	8.0	10.5
TEES AND PLUGS	6"	1.5	2.0	7"	1.75	0.13
	8"	2.0	3.0	7"	2.0	0.3
	12"	2.0	4.0	11"	4.0	0.8
	16"	4.0	5.0	15"	5.0	1.8
	20"	2.0	7.0	19"	6.0	3.9
	24"	2.0	8.0	22"	7.0	5.5

THIS DETAIL WAS TAKEN FROM THE CITY OF ATLANTA'S WEBSITE. IT MAY HAVE BEEN MODIFIED AND SHOULD BE REVIEWED THOROUGHLY.

City of Atlanta | STANDARD DETAILS | TYPICAL HORIZONTAL THRUST BLOCK | REV. DATE: OCT. 2011 | ORIG. DATE: NOV. 2004 | SCALE: N.T.S. | DETAIL NO. WR-G_TH005

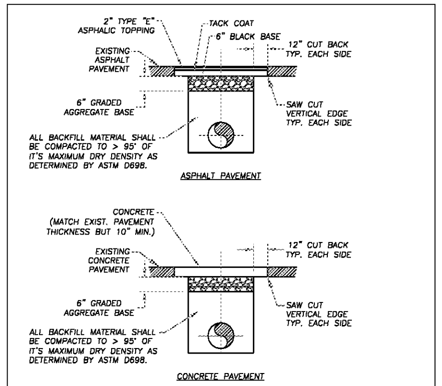

NOTE:
TYPE III PAVEMENT REPLACEMENT SHALL BE USED ONLY FOR. LONGITUDINAL INSTALLATION AND WHERE THE TRENCH WIDTH AT THE TOP OF PIPE IS GREATER THAN FOUR FEET.

THIS DETAIL WAS TAKEN FROM THE CITY OF ATLANTA'S WEBSITE. IT MAY HAVE BEEN MODIFIED AND SHOULD BE REVIEWED THOROUGHLY.

City of Atlanta | STANDARD DETAILS | TYPE III PAVEMENT REPLACEMENT | REV. DATE: OCT. 2011 | ORIG. DATE: OCT. 2004 | SCALE: N.T.S. | DETAIL NO. WR-G_PV003

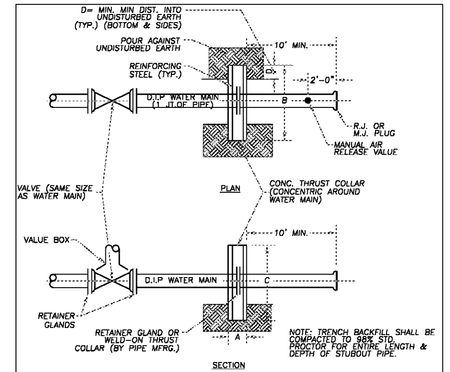

NOTE: TRENCH BACKFILL SHALL BE COMPACTED TO 98% STD. PROCTOR FOR ENTIRE LENGTH & DEPTH OF STUBOUT PIPE.

MAIN DIA	CONCRETE COLLAR DIM. A	B	C	D	REINFORCING STEEL
6"OR 8"	1'-0"	4'-6"	4'-6"	1'-0"	#9 @ 12" O.C. E.W.E.F
12"	1'-2"	5'-4"	5'-2"	1'-2"	#9 @ 12" O.C. E.W.E.F
16"	1'-3"	5'-10"	5'-7"	1'-3"	#9 @ 12" O.C. E.W.E.F
20"	1'-6"	6'-8"	6'-2"	1'-6"	#9 @ 12" O.C. E.W.E.F

TEST PRESSURE: 250 P.S.I.
SOIL BEARING PRESSURE: 2500 P.S.F.

NOTE: TERMINATION DETAIL FOR LARGER DIAMETER PIPE SHALL BE DETERMINED FOR EACH PROJECT.

THIS DETAIL WAS TAKEN FROM THE CITY OF ATLANTA'S WEBSITE. IT MAY HAVE BEEN MODIFIED AND SHOULD BE REVIEWED THOROUGHLY.

City of Atlanta | STANDARD DETAILS | TYPICAL WATER MAIN TERMINATION | REV. DATE: OCT. 2011 | ORIG. DATE: OCT. 2004 | SCALE: N.T.S. | DETAIL NO. WR-G_ST001

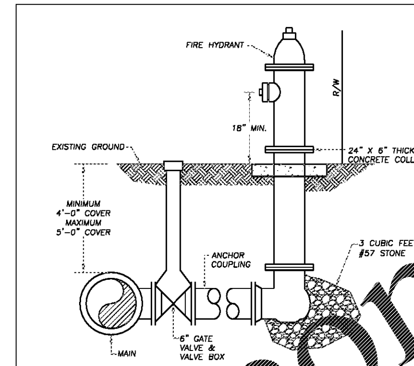

NOTES:
1. HYDRANT CONNECTOR MAY BE USED IN LIEU OF ANCHOR COUPLING.
2. HYDRANT DEPTH OF BURY SHALL MATCH MFGR.'S BURY LINE.
3. HYDRANTS SHALL BE LOCATED:
   -ONE FOOT BEHIND SIDEWALK, OR
   -IF NO SIDEWALK, 6 FEET BEHIND CURB, OR
   -IF NO SIDEWALK OR CURB, ONE FOOT INSIDE OF R/W.
4. WHERE ANCHOR COUPLING IS > 4 FEET LONG, PROVIDE DIP W/RET. GLD. OR TWO 3/4" RODS.

THIS DETAIL WAS TAKEN FROM THE CITY OF ATLANTA'S WEBSITE. IT MAY HAVE BEEN MODIFIED AND SHOULD BE REVIEWED THOROUGHLY.

City of Atlanta | STANDARD DETAILS | TYPICAL FIRE HYDRANT | REV. DATE: OCT. 2011 | ORIG. DATE: OCT. 2004 | SCALE: N.T.S. | DETAIL NO. WR-G_FH001

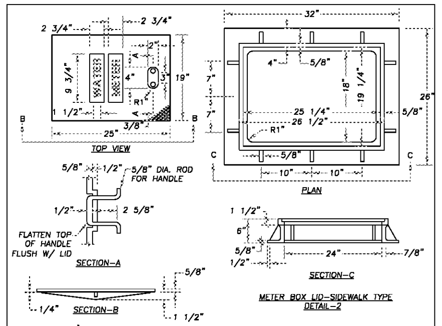

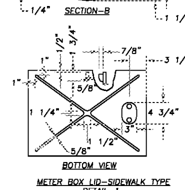

GENERAL NOTES:
1. UNLESS NOTED OTHERWISE, CAST IRON SHALL CONFORM TO A.S.T.M. SPECIFICATIONS A48 LATEST REVISION FOR CLASS 20 GREY IRON CASTINGS.
2. CASTINGS SHALL BE TRUE AND FREE OF HOLES. THEY SHALL BE CLEANED ACCORDING TO GOOD FOUNDRY PRACTICE, CHIPPED AND GROUND AS NEEDED TO REMOVE FINS AND ROUGH PLACES.
3. FINISHED CASTINGS SHALL BE COATED INSIDE AND OUTSIDE WITH COAL TAR PITCH VARNISH AS INDICATED IN A.W.W.A. SPECIFICATIONS C110, LATEST REVISION. COATING MAY BE APPLIED COLD AND SHALL BE SMOOTH, GLOSSY, NOT BRITTLE WHEN COLD, NOT STICKY WHEN EXPOSED TO THE SUN, AND SHALL ADHERE TO THE METAL AT ALL TEMPERATURES.
4. WHEN COATING IS COMPLETE, LID SHALL FIT SNUGLY WITHOUT ROCKING.

THIS DETAIL WAS TAKEN FROM THE CITY OF ATLANTA'S WEBSITE. IT MAY HAVE BEEN MODIFIED AND SHOULD BE REVIEWED THOROUGHLY.

City of Atlanta | STANDARD DETAILS | TYPICAL METER BOX LID AND FRAME SIDEWALK TYPE | REV. DATE: OCT. 2011 | ORIG. DATE: NOV. 2004 | SCALE: N.T.S. | DETAIL NO. WR-G_ME004

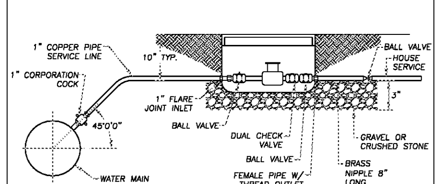

NOTE:
1. FOR 1 1/2" AND 2-INCH SERVICES, MULTIPLE 1-INCH SERVICE LINES SHALL BE PROVIDED BETWEEN WATER MAIN AND WATER METER.
2. NEW SERVICE LINE UNDER ROADWAYS SHALL BE INSTALLED IN A CASING. REPLACEMENT SERVICE LINES MAY BE INSTALLED BY FREE BORE IF EXIST SERVICE IS NOT CASING.

THIS DETAIL WAS TAKEN FROM THE CITY OF ATLANTA'S WEBSITE. IT MAY HAVE BEEN MODIFIED AND SHOULD BE REVIEWED THOROUGHLY.

City of Atlanta | STANDARD DETAILS | WATER SERVICE AND METER CONNECTION | REV. DATE: OCT. 2011 | ORIG. DATE: OCT. 2004 | SCALE: N.T.S. | DETAIL NO. WR-G_SV004

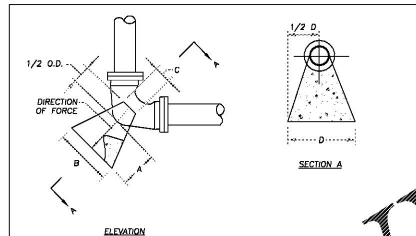

NOTE:
ENGINEER SHALL VERIFY SOIL CONDITION BEFORE THRUST BLOCK DESIGN IS IMPLEMENTED.

DESIGN DATA:
DIMENSION OF THRUST BLOCK IN FEET BASED ON 2000 POUNDS PER SQUARE FOOT SOIL BEARING PRESSURE AND 250 PER SQUARE INCH TEST PRESSURE. ACTUAL INSIDE DIAMETER OF DUCTILE IRON PIPE, CLASS 2 USED AS STANDARD.

CONCRETE SHALL BE CLASS A,3000 P.S.I. HIGH EARLY.

MINIMUM DIMENSIONS IN FEET FOR CONCRETE BLOCKING

BEND	SIZE	A	B	C	D	VOLUME CUBIC YARD
11 1/4°	6"	1.0	1.0	7"	1.0	0.03
	8"	1.0	1.25	7"	1.0	0.04
	12"	1.0	2.0	11"	2.0	0.1
	16"	2.0	3.0	15"	2.0	0.3
	20"	2.0	3.0	19"	3.0	0.5
	24"	3.0	4.0	22"	3.0	0.8
22 1/2°	6"	1.0	1.5	7"	1.0	0.04
	8"	1.0	2.0	7"	2.0	0.1
	12"	2.0	3.0	11"	2.0	0.3
	16"	2.0	4.0	15"	3.0	0.6
	20"	3.0	5.0	19"	3.0	0.1
	24"	4.0	6.0	22"	4.0	2.3
45°	6"	1.5	2.0	7"	1.5	0.11
	8"	2.0	3.0	7"	2.0	0.3
	12"	2.0	4.0	11"	3.0	0.7
	16"	3.0	5.0	15"	4.0	1.4
	20"	4.0	6.0	19"	5.0	2.8
	24"	5.0	8.0	22"	6.0	5.0

BEND	SIZE	A	B	C	D	VOLUME CUBIC YARD
90°	6"	1.5	2.5	7"	2.0	0.2
	8"	2.0	3.0	7"	3.0	0.4
	12"	4.0	6.0	11"	4.0	2.1
	16"	4.0	7.0	15"	5.0	3.1
	20"	5.0	8.0	19"	7.0	5.3
	24"	6.0	10.0	22"	8.0	10.5
TEES AND PLUGS	6"	1.5	2.0	7"	1.75	0.13
	8"	2.0	3.0	7"	2.0	0.3
	12"	2.0	4.0	11"	4.0	0.8
	16"	4.0	5.0	15"	5.0	1.8
	20"	5.0	7.0	19"	6.0	3.9
	24"	2.0	8.0	22"	7.0	5.5

THIS DETAIL WAS TAKEN FROM THE CITY OF ATLANTA'S WEBSITE. IT MAY HAVE BEEN MODIFIED AND SHOULD BE REVIEWED THOROUGHLY.

City of Atlanta | STANDARD DETAILS | TYPICAL DOWNWARD THRUST BLOCK | REV. DATE: OCT. 2011 | ORIG. DATE: NOV. 2004 | SCALE: N.T.S. | DETAIL NO. WR-G_TH004

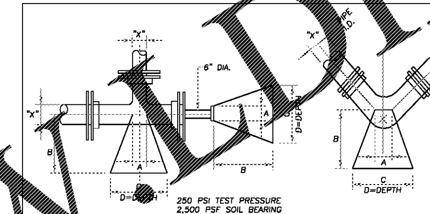

BLOCKING DIMENSIONS

		X*	A	B	C	D
DEAD END & TEES		24"	2'-0"	4'-6"	14.0'	7.0'
		20"	1'-8"	3'-9"	11.7'	5.9'
		16"	1'-3"	3'-3"	9.5'	4.7'
		12"	1'-0"	2'-6"	7.1'	3.6'
		10"	1'-0"	2'-0"	6.0'	3.0'
		8"	0'-10"	1'-9"	4.9'	2.5'
		6"	0'-8"	1'-3"	3.7'	1.8'
BENDS	90°	24"	2'-0"	5'-9"	16.7'	8.3'
		20"	1'-8"	4'-9"	13.9'	7.0'
		16"	1'-3"	4'-0"	15.9'	5.6'
		12	1'-0"	3'-0"	8.5'	4.3'
		10"	1'-0"	2'-6"	7.1'	3.6'
		8"	0'-10"	2'-0"	5.9'	2.9'
		6"	0'-8"	1'-6"	4.4'	2.2'
	45°	24"	2'-0"	4'-0"	12.2'	6.1'
		20"	1'-8"	3'-3"	10.2'	5.1'
		16"	1'-3"	2'-9"	8.2'	4.1'
		12	1'-0"	2'-0"	6.2'	3.1'
		10"	1'-0"	1'-9"	5.3'	2.6'
		8"	0'-10"	1'-6"	4.3'	2.2'
		6"	0'-10"	1'-3"	3.2'	1.6'

BLOCKING DIMENSIONS

		X*	A	B	C	D
BENDS	22 1/2°	24"	2'-0"	2'-6"	8.8'	4.4'
		20"	1'-8"	2'-0"	7.4'	3.7'
		16"	1'-3"	1'-9"	5.9'	2.9'
		12"	1'-0"	1'-3"	4.5'	2.3'
		10"	1'-0"	1'-3"	3.8'	1.9'
		8"	0'-10"	1'-0"	3.1'	1.6'
		6"	0'-8"	0'-9"	2.3'	1.2'
	11 1/4°	24"	2'-0"	1'-6"	6.2'	3.1'
		20"	1'-8"	1'-3"	5.2'	2.6'
		16"	1'-3"	1'-0"	4.2'	2.1'
		12	1'-0"	0'-9"	3.1'	1.6'
		10"	1'-0"	0'-9"	2.7'	1.4'
		8"	0'-10"	0'-6"	2.1'	1.1'
		6"	0'-8"	0'-6"	1.4'	1.0'

X*= DIAMETER OF PIPE TO BE BLOCKED

NOTE: BLOCKING FOR LARGER DIAMETER PIPE SHALL BE DETERMINED FOR EACH PROJECT.

THIS DETAIL WAS TAKEN FROM THE CITY OF ATLANTA'S WEBSITE. IT MAY HAVE BEEN MODIFIED AND SHOULD BE REVIEWED THOROUGHLY.

City of Atlanta | STANDARD DETAILS | TYPICAL BLOCKING | REV. DATE: OCT. 2011 | ORIG. DATE: OCT. 2004 | SCALE: N.T.S. | DETAIL NO. WR-G_TH006

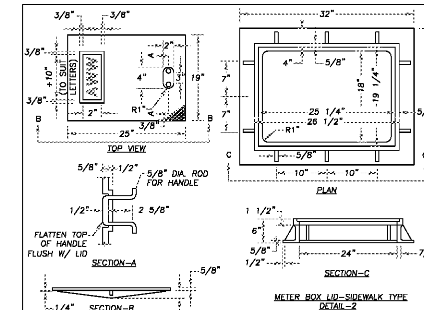

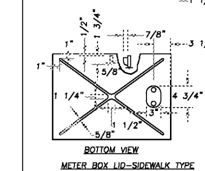

GENERAL NOTES:
1. UNLESS NOTED OTHERWISE, CAST IRON SHALL CONFORM TO A.S.T.M. SPECIFICATIONS A48 LATEST REVISION FOR CLASS 20 GREY IRON CASTINGS.
2. CASTINGS SHALL BE TRUE AND FREE OF HOLES. THEY SHALL BE CLEANED ACCORDING TO GOOD FOUNDRY PRACTICE, CHIPPED AND GROUND AS NEEDED TO REMOVE FINS AND ROUGH PLACES.
3. FINISHED CASTINGS SHALL BE COATED INSIDE AND OUTSIDE WITH COAL TAR PITCH VARNISH AS INDICATED IN A.W.W.A. SPECIFICATIONS C110, LATEST REVISION. COATING MAY BE APPLIED COLD AND SHALL BE SMOOTH, GLOSSY, NOT BRITTLE WHEN COLD, NOT STICKY WHEN EXPOSED TO THE SUN, AND SHALL ADHERE TO THE METAL AT ALL TEMPERATURES.
4. WHEN COATING IS COMPLETE, LID SHALL FIT SNUGLY WITHOUT ROCKING.

THIS DETAIL WAS TAKEN FROM THE CITY OF ATLANTA'S WEBSITE. IT MAY HAVE BEEN MODIFIED AND SHOULD BE REVIEWED THOROUGHLY.

City of Atlanta | STANDARD DETAILS | TYPICAL METER BOX LID AND FRAME TRAFFIC TYPE | REV. DATE: OCT. 2011 | ORIG. DATE: NOV. 2004 | SCALE: N.T.S. | DETAIL NO. WR-G_ME003

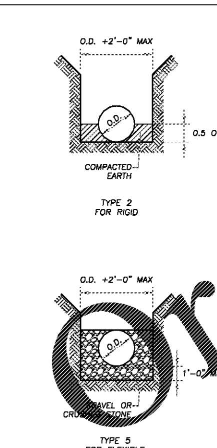

THIS DETAIL WAS TAKEN FROM THE CITY OF ATLANTA'S WEBSITE. IT MAY HAVE BEEN MODIFIED AND SHOULD BE REVIEWED THOROUGHLY.

City of Atlanta | STANDARD DETAILS | TYPICAL WATER MAIN BEDDING & HAUNCHING | REV. DATE: OCT. 2011 | ORIG. DATE: OCT. 2004 | SCALE: N.T.S. | DETAIL NO. WR-G_TR002

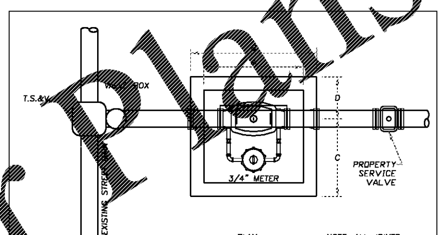

BILL OF MATERIAL
1.) T.S.&V.
2.) 2- COUPLINGS
3.) DETECTOR CHECK (3/4" METER)
4.) 10'-8" D.I.P. SHORT
5.) +40'-8" D.I.P. LONG

NOTE:
FOR WATER MAIN IN SIDEWALK METER MAY BE INSTALLED PARALLEL WITH WATER MAIN.

IF INSUFFICIENT AREA EXISTS WITHIN PUBLIC RIGHT-OF-WAY, A METER EASEMENT MUST BE PROVIDED.

DIMENSIONS (IN INCHES)

DETECTOR CHECK SIZE	A	B	C	D
6"	22	48	34	20
8"	26	48	34	20
10"	26	48	34	20

NOTE: THIS DRAWING FOR DESIGN INFORMATION ONLY UWSA FORCES WILL INSTALL ALL DETECTORS CHECK VALVES.

THIS DETAIL WAS TAKEN FROM THE CITY OF ATLANTA'S WEBSITE. IT MAY HAVE BEEN MODIFIED AND SHOULD BE REVIEWED THOROUGHLY.

City of Atlanta | STANDARD DETAILS | TYPICAL DETECTOR CHECK VALVE INSTALLATION | REV. DATE: OCT. 2011 | ORIG. DATE: NOV. 2004 | SCALE: N.T.S. | DETAIL NO. WR-G_VL004

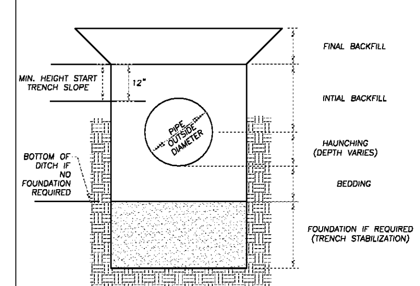

THIS DETAIL WAS TAKEN FROM THE CITY OF ATLANTA'S WEBSITE. IT MAY HAVE BEEN MODIFIED AND SHOULD BE REVIEWED THOROUGHLY.

City of Atlanta | STANDARD DETAILS | TRENCH TERMINOLOGY | REV. DATE: OCT. 2011 | ORIG. DATE: OCT. 2004 | SCALE: N.T.S. | DETAIL NO. WR-G_TR003

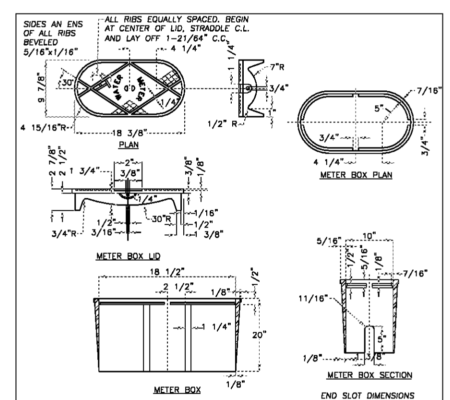

GENERAL NOTES:
1. UNLESS NOTED OTHERWISE, CAST IRON SHALL CONFORM TO A.S.T.M. SPECIFICATIONS A48 LATEST REVISION FOR CLASS 20 GREY IRON CASTINGS.
2. CASTINGS SHALL BE TRUE AND FREE OF HOLES. THEY SHALL BE CLEANED ACCORDING TO GOOD FOUNDRY PRACTICE, CHIPPED AND GROUND AS NEEDED TO REMOVE FINS AND ROUGH PLACES.
3. FINISHED CASTINGS SHALL BE COATED INSIDE AND OUTSIDE WITH COAL TAR PITCH VARNISH AS INDICATED IN A.W.W.A. SPECIFICATIONS C110, LATEST REVISION. COATING MAY BE APPLIED COLD AND SHALL BE SMOOTH, GLOSSY, NOT BRITTLE WHEN COLD, NOT STICKY WHEN EXPOSED TO THE SUN, AND SHALL ADHERE TO THE METAL AT ALL TEMPERATURES.
4. WHEN COATING IS COMPLETE, LID SHALL FIT SNUGLY WITHOUT ROCKING.

THIS DETAIL WAS TAKEN FROM THE CITY OF ATLANTA'S WEBSITE. IT MAY HAVE BEEN MODIFIED AND SHOULD BE REVIEWED THOROUGHLY.

City of Atlanta Department of Public Works | STANDARD DETAILS | TYPICAL METER BOX ASSEMBLY | DATE: OCT. 2011 | ORIG. DATE: OCT. 2004 | SCALE: N.T.S. | DETAIL NO. WR-G_ME001

NOM. PIPE DIA.	BELL DEPTH	BOLTS DIAMETER	BOLTS LENGTH	BOLTS NUMBER PER JOINT	BOLTS REC.TORQUE FT.-Lbs.	JOINTS ACCESSORY WEIGHT-Lbs.
4	2"	3/4"	3"	4	75-90	10
6	2"	3/4"	3"	6	75-90	16
8	2"	3/4"	4"	6	75-90	25
10	2"	3/4"	4"	8	75-90	30
12	2"	3/4"	4"	8	75-90	40
14	3 1/2"	3/4"	4"	10	75-90	45
16	3 1/2"	3/4"	4"	12	75-90	55
18	3 1/2"	3/4"	4 "	12	75-90	65
20	3 1/2"	3/4"	4"	14	75-90	85
24	3 1/2"	3/4"	5"	16	75-90	105
30	4"	1"	6"	20	100-120	220
36	4"	1"	6"	24	100-120	285
42	4"	1 1/4"	6"	28	120-150.	400
48	4"	1 1/4"	6"	32	120-150.	475

THIS DETAIL WAS TAKEN FROM THE CITY OF ATLANTA'S WEBSITE. IT MAY HAVE BEEN MODIFIED AND SHOULD BE REVIEWED THOROUGHLY.

City of Atlanta | STANDARD DETAILS | MECHANICAL JOINT BOLT USAGE CHART | REV. DATE: OCT. 2011 | ORIG. DATE: NOV. 2004 | SCALE: N.T.S. | DETAIL NO. WR-G_MJ002

1 CONSTRUCTION DETAILS
NTS

Order Plans @ WWW.LDILinc.com

Grady

Project
THE CENTER FOR ADVANCED SURGICAL SERVICES (CASS)
80 GILMER STREET SE
ATLANTA, GA 30303

Prepared For
GRADY HEALTH SYSTEM
80 JESSE HILL DR. SE
ATLANTA, GA 30303

Hellmuth, Obata & Kassabaum, Inc.
133 Peachtree Street, NE, Suite 4800
Atlanta, GA 30303 USA
t +1 404 439 9000 f +1 404 439 9001

All reproduction & intellectual property rights reserved © 2019

In Association with

Eberly & Associates, Inc.
CIVIL ENGINEERING
2951 Flowers Road South, Suite 119
Atlanta, GA 30341

Key Plan

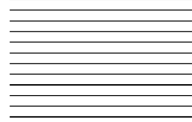

Professional Seals

NOT FOR CONSTRUCTION

No.	Description	Date
1	DD - GMP	2019-07-03

Project No: 18.16013.00

Sheet Title
CONSTRUCTION DETAILS

Original is 30 x 42. Do not scale contents of this drawing.

Sheet Number
C702