© 2019 JOHN SANFORD ARCHITECTS - ALL PLANS, SPECIFICATIONS, COMPUTER FILES AND OTHER DOCUMENTATION PREPARED BY JOHN SANFORD ARCHITECTS ARE CONSIDERED INSTRUMENTS OF SERVICE AND SHALL REMAIN THE PROPERTY OF JOHN SANFORD ARCHITECTS. JOHN SANFORD ARCHITECTS SHALL RETAIN ALL COMMON LAW, STATUTORY AND OTHER RESERVED RIGHTS, INCLUDING THE COPYRIGHT THERETO. ANY REUSE, REPRODUCTION, RECREATION AND REPRINTING WITHOUT WRITTEN PERMISSION IS PROHIBITED. ALL THIRD PARTY ALTERATIONS TO INSTRUMENTS OF SERVICE ISSUED BY JOHN SANFORD ARCHITECTS ARE PROHIBITED

ABBREVIATION NOTES.
1. SEE ALSO LIFE SAFETY REFERENCE, FURNITURE AND EQUIPMENT, ROOM OPENING AND ROOM FINISHE SCHEDULES FOR ADDITIONAL ABBREVIATIONS.

ABBREVIATIONS

"@ = AT
= POUND
& = AND

A
A LABEL = CLASS A DOOR
A/C = AIR CONDITION
A/E = ARCHITECT/ENGINEER
AAP OR AP = ALARM ANNUNCIATOR PANEL
AB = ANCHOR BOLT
ABBRV = ABBREVIATION
AC = ASBESTOS CEMENT
ACC = ACCESSIBLE OR ACCESS
ACOUS INSUL = ACOUSTICAL INSULATION
ACOUS PNL = ACOUSTICAL PANEL
ACR = ACROSS
ACS FLR OR ACC FLR OR AF = ACCESS FLOOR
ACST OR ACOUST = ACOUSTIC
ACT (SP) OR AT (SP) = ACOUSTICAL CEILING TILE (WITH SPRAYED PLASTIC FINISH)
ACT OR AT = ACOUSTICAL CEILING TILE
ACT OR AT = ACOUSTICAL CEILING TILE
AD = AREA DRAIN
ADB = AUTOMATIC DOOR BOTTOM
ADC = AUTOMATIC DOOR CLOSER
ADDL = ADDITIONAL
ADDN = ADDITION
ADH = ADHESIVE
ADJ = ADJOINING OR ADJACENT OR ADJUSTABLE
ADMIN = ADMINISTRATION
ADO = AUTOMATIC DOOR OPERATOR
ADS = AUTOMATIC DOOR SEAL
AFC = ABOVE FINISHED COUNTER
AFF = ABOVE FINISHED FLOOR
AHR = ANCHOR
AHU = AIR HANDLING UNIT
AID = AUDIO INPUT DEVICE
ALK = AUDIBLE ALARM (ON EGRESS)
ALT = ALTERNATE
ALTRN = ALTERATION
ALUM OR AL = ALUMINUM
AMEND = AMENDMENT
ANOD = ANODIZE OR ANODIZED
ANT = ANTENNA
APC OR PC = ARCHITECTURAL PRECAST CONCRETE
APPD = APPROVED
APPROX = APPROXIMATE
AR = AS REQUIRED
ARCH = ARCHITECT
ASB = ASBESTOS
ASD = AUTOMATIC SLIDING DOOR
ASST = ASSISTANT
ATCH OR ATTCH = ATTACHMENT OR ATTACH OR ATTACHED
ATM = AUTOMATIC TELLER MACHINE
AUTO = AUTOMATIC
AUX = AUXILIARY
AV = AUDIO VISUAL
AVG = AVERAGE
AW = ARCHITECTURAL WOODWORK
AWF = ACOUSTIC WALL FABRIC (TACKABLE)
AWP = ACOUSTIC WALL PANEL
AWT = ACOUSTICAL WALL TREATMENT

B
B LABEL = CLASS B DOOR
B/B = BACK TO BACK
BA = BUILDING ACCESSORY
BAL = BALANCE
BALC = BALCONY
BAT = BATTEN
BB = BASEBOARD
BB OR BBD = BULLETIN BOARD
BBR = BASE BOARD RADIATOR
BC = BETWEEN CENTERS OR BOOK CASE
BD = BOARD
BDRY = BOUNDARY
BEV = BEVEL
BG = BUMPER GUARD
BI FLD DR = BIFOLDING DOORS
BIM = BUILDING INFORMATION MODEL (REVIT MODEL)

BITUM = BITUMINOUS
BKG = BACKING
BL = BUILDING LINE
BLDG = BUILDING
BLKG = BLOCKING
BLKHD = BULKHEAD
BLT = BORROWED LIGHT
BLW = BELOW
BM = BEAM
BMS = BUILDING MAMAGMENT SYSTEM
BN = BULLNOSE
BO = BY OWNER
BOF = BOTTOM OF FOOTING/FOUNDATION
BOS = BOTTOM OF STEEL
BOT = BOTTOM
BOW = BOTTOM OF WALL
BP = BRICK PAVERS (UNIT PAVERS)
BP = BUILDING PAPER
BR = BRICK
BRCG = BRACING
BRDG = BRIDGING
BRG = BEARING
BRKT OR BKT = BRACKET
BRL = BRICK LEDGE
BS = BOTH SIDES
BSMT = BASEMENT
BT OR B = BATHTUB
BTWN = BETWEEN
BUR = BUILT-UP ROOFING
BW = BOTH WAYS
BZ = BUZZER

C
C = CHANNEL
C LABEL = CLASS C DOOR
C TO C = CENTER TO CENTER
CAB = CABINET
CALC = CALCULATE
CAN = CANOPY
CANTIL = CANTILEVER
CATW = CATWALK
CAV = CAVITY
CB = CORNER BEAD
CBB OR CB = CONCRETE OR CEMENTITIOUS (BACKER) BOARD
CBD = CEMENT BOARD
CC = COLOR CODE
CC = CUBICLE CURTAIN
CCD = COILING COUNTER DOOR
CCT = CUBICLE CURTAIN TRACK
CCTV = CLOSED CIRCUIT TELEVISION
CD = CONSTRUCTION DOCUMENTS OR CONTRACT DOCUMENT
CEF = CONDUCTIVE ELASTROMERIC (LIQUID) FLOORING
CEM = CEMENT
CER = CERAMIC
CFLG = COUNTERFLASHING
CG = CORNER GUARD
CH = COAT HOOK
CH BD = CHALKBOARD
CHFR = CHAMFER
CHMBR = CHAMBER
CI = CAST IRON
CIP = CAST-IN-PLACE
CIR = CIRCLE
CIRC = CIRCULAR
CJ OR CJT = CONSTRUCTION JOINT OR CONTROL JOINT
CL = CENTER LINE
CL = STAND ALONE CARD READER LOCK
CLASS = CLASSIFICATION
CLDG = CLADDING
CLG = CEILING
CLL = CONTRACT LIMIT LINE
CLO = CLOSET
CLR = CLEAR
CLRM = CLASSROOM
CM = CONSTRUCTION MANAGEMENT
CMU = CONCRETE MASONRY UNIT
CNCL = CONCEALED
CNR = CORNER
CO = CASED OPENING
CO = CLEANOUT
COL = COLUMN
COMB = COMBINATION, COMBINED
COMM = COMMUNICATION
COMPL = COMPLETE
CONC OR C = CONCRETE
COND = CONDITION
CONN = CONNECT
CONSTR = CONSTRUCTION
CONT = CONTINUE
CONTR = CONTRACTOR
COORD = COORDINATE
COP = COPING
CORN = CORNICE
CORR = CORRIDOR
CPT = CARPET TILE
CPT OR CP = CARPET
CR = CARD READER
CR = CONTROL ROOM
CR = CRASH RAIL
CRCMF = CIRCUMFERENCE
CRN = CROWN
CS OR CSTN = CAST STONE
CSG = CASING
CSK = COUNTER SUNK
CSTN = CAST STONE
CSWK OR CW = CASEWORK
CT = CERAMIC TILE
CT = COUNT
CT STN = CUT STONE
CTB = CERAMIC TILE BASE
CTF = CERAMIC TILE FLOOR
CTG = COATING
CTOP = COUNTER TOP
CTR = CENTER OR CONTOUR
CTRL = CONTROL
CU = COPPER
CUB = CUBICLE
CUH = CABINET UNIT HEATER
CUR = CURRENT
CW = CLOCKWISE OR CURTAINWALL
CYL = CYLINDER

D
D = DEEP OR DEPTH
D = PENNY (NAIL)
D LABEL = CLASS D DOOR
DAT = DATUM
DB = DECIBEL
D-B = DESIGN-BUILD
DBL = DOUBLE
DE = DELAYED EGRESS
DE = DOUBLE EGRESS
DEF = DEFINITION
DEFS = DIRECT APPLIED EXTERIOR FINISH SYSTEM
DEG = DEGREE
DEL = DELETE
DEMO = DEMOLITION OR DEMONSTRATION
DENS = DENSITY
DEPR = DEPRESSION
DEPT = DEPARTMENT
DESCR = DESCRIBE OR DESCRIPTION
DET = DETAIL
DETN = DETENTION
DF = DOOR FRAME
DF = DRINKING FOUNTAIN
DFLCT = DEFLECTION
DFP = DOOR FRAME PROTECTION
DIA = DIAMETER
DIAG = DIAGONAL OR DIAGRAM
DICT = DICTATION
DIFF = DIFFERENCE OR DIFFERENTIAL OR DIFFUSER
DIM = DIMENSION
DIR = DIRECTOR OR DIRECTION
DISP = DISPENSER
DIST = DISTRICT OR DISTANCE
DIV = DIVIDE OR DIVISION
DLO = DAY LIGHT OPENING
DN = DOWN
DOC = DOCUMENT
DP = DOOR PANEL
DP = DOWNPIPE OR DEMOUNTABLE PARTITION
DPC = DAMPPROOF COURSE
DPS = DOOR POSITION SWITCH (DOOR CONTACT)
DPTN = DEMOUNTABLE PARTITION
DR = DOOR
DR = DRAIN
DR CL = DOOR CLOSER
DR FR = DOOR FRAME
DR OPNG = DOOR OPENING
DRH = DOOR HOLDER
DRLV = DOOR LOUVER
DRST = DOOR STOP
DRSW = DOOR SWITCH
DS = DOWNSPOUT
DSGN = DESIGN
DT = DRAIN TILE
DTCH = DETACH
DVTL = DOVETAIL
DW = DISHWASHER
DWG = DRAWING
DWLS= DOWELS
DWR = DRAWER

E
E = EAST
E LABEL = CLASS E DOOR
EA = EACH
EF = EACH FACE
EFTR = EXISTING FINISH TO REMAIN
EIFS = EXTERIOR INSULATION AND FINISH SYSTEM
EJ OR EXP JT OR EJT = EXPANSION JOINT
EL = ELEVATION
ELEC = ELECTRIC
ELEV = ELEVATOR
EMER OR EMERG = EMERGENCY
EMS = ENERGY MANAGEMENT SYSTEM
ENAM = ENAMEL
ENCL = ENCLOSURE
ENGR = ENGINEER
ENTR = ENTRANCE
ENVIR = ENVIRONMENT
EO = ELECTRICAL OUTLET
EP OR EPY = EPOXY PAINT
EPDM = ETHYLENE PROPYLENE DIENE MONOMER
EPS = EXPANDED POLYSTYRENE BOARD (INSULATION)
EQ = EQUAL
EQL SP = EQUALLY SPACED
EQUIV = EQUIVALENT
ERF = EPOXY RESIN FLOORING
ES = EACH SIDE
ESCAL = ESCALATOR
ESMT = EASEMENT
ESTB = ESTABLISH
ETC = AND SO FORTH ET CETERA
EW = EACH WAY
EWC = ELECTRIC WATER COOLER
EWS = EYE WASH STATION
EXC = EXCAVATE
EXCL = EXCLUDE
EXEC = EXECUTE
EXH = EXHAUST
EXH FN OR EXF = EXHAUST FAN
EXIST OR EX OR (E) = EXISTING
EXP = EXPAND OR EXPANSION OR EXPOSED
EXP = EXPOSED
EXP BT = EXPANSION BOLT
EXT = EXTERIOR OR EXTERNAL

F
F = FEMALE
F/F = FACE TO FACE
FA = FIRE ALARM
FAB = FABRICATE
FACIL = FACILITY
FAS = FASCIA
FAX = FACSIMILE
FBC = FIRE BLANKET CABINET
FC = FILE CABINET
FD = FLOOR DRAIN
FDC = FIRE DEPARTMENT CONNECTION
FDR = FIRE DOOR
FDTN OR FDN OR FND = FOUNDATION
FDV = FIRE DEPARTMENT VALVE
FE = FIRE EXTINGUISHER
FEC = FIRE EXTINGUISHER CABINET
FED = FEDERAL
FF&E = FURNITURE, FIXTURE, AND EQUIPMENT
FGL = FIBERGLASS
FGS = FOAM GASKET SEAL
FHC = FIRE HOSE CABINET
FIG = FIGURE
FIN = FINISH
FIXT = FIXTURE
FL MAT = FLOOR MAT
FLASH = FLASHING
FLEX = FLEXIBLE
FLG = FLANGE
FLG = FLOORING
FLR = FLOOR
FLR OR F = FILLER
FLUOR = FLUORESCENT
FN = FENCE
FOUNT = FOUNTAIN
FP = FIRE PROTECTION OR FIRE PROOF
FPL = FIREPLACE
FPSC = FIRE PROOF SELF CLOSING
FR = FIRE RESISTANT
FR = FRAME
FR SNK OR FRS = FLUSHING RIM SINK
FRA = FIRE RATED ASSEMBLY
FREQ = FREQUENCY
FRMG = FRAMING
FRP = FIBER REINFORCED POLYESTER OR FIBERGLASS REINFORCED PLASTIC
FRT = FREIGHT
FRTW = FIRE RETARDANT TREATED WOOD
FRZ = FREEZER
FS = FULL SCALE OR FULL SIZE
FSTNR = FASTENER
FSTOP = FIRE STOPPING
FT = FEET OR FOOT OR FIRE TREATED
FTG = FOOTING
FTR = FINNED TUBE RADIATION
FURN = FURNISH OR FURNITURE
FUT = FUTURE
FV = FLUSH VALVE
FW = FIRE WALL
FWC = FABRIC WALLCOVERING
FWP = FABRIC WRAPPED PANEL

G
G = GROUND
GA = GAUGE
GAL = GALLON
GALV = GALVANIZED
GB = GRAB BAR
GC = GENERAL CONTRACTOR
GEN = GENERAL OR GENERATOR
GI = GALVANIZED IRON
GL = GLASS
GL = GROUND LEVEL
GLU LAM = GLUED LAMINATED WOOD
GLZ = GLAZING
GPC = GYPSUM PLASTER CEILING
GPS = GRAPHIC PANEL SYSTEM
GR = GUARDRAIL
GRAD = GRADIENT
GRDN = GARDEN
GRTG = GRATING
GRV = GROOVE
GT = GLASS TILE
GT = GROUT
GWT = GLAZED WALL TILE
GYM = GYMNASIUM
GYP = GYPSUM
GYP BD OR GYB OR GWB = GYPSUM BOARD
GYP SHTG = GYPSUM SHEATHING

H
H = HUMIDISTAT
H PLAM = HIGH PRESSURE PLASTIC LAMINATE
HB = HOSE BIBB
HC = HANDICAP
HC = HOLLOW CORE
HCP = HANDICAPPED
HD = HAND DRYER
HDW OR HDWR OR HW = HARDWARE
HEX = HEXAGON
HGR = HANGER
HLDN = HOLDDOWN
HM = HOLLOW METAL
HMDF = HOLLOW METAL DOOR AND FRAME
HMF = HOLLOW METAL FRAME
HNDRL OR HR = HANDRAIL
HO OR H = HOLD OPEN
HORIZ = HORIZONTAL
HPC = HIGH PERFORMANCE COATING
HPLAM = HIGH PRESSURE PLASTIC LAMINATE
HR = HANDRAIL
HSAN OR SDISP = HAND SANITIZER
HSKPG OR HSKG = HOUSEKEEPING
HST = HOIST
HSTOP = HOSPITAL STOP
HT = HEIGHT
HTR = HEATER
HVAC = HEATING, VENTILATING, AND AIR CONDITIONING
HVY = HEAVY
HWD = HARDWOOD
HWY = HIGHWAY
HYD = HYDRANT

I
IC = IRONING CABINET
ID = INSIDE DIAMETER
ID = INTEGRATED DOOR ASSEMBLY
IL = INTERLOCKED
ILLUM = ILLUMINATION
INC = INCREASE
INCL = INCLUDED
INFO = INFORMATION
INSTL = INSTALL
INSUL = INSULATION
INT = INTERIOR
INTERCOM OR IC = INTERCOMMUNICATION
IR = INSIDE RADIUS
ISO = ISOMETRIC

J
JAN = JANITOR
J-BOX OR JB = JUNCTION BOX
JS = JANITOR'S SINK
JST = JOIST
JT = JOINT

K
KA = CYLINDER LOCKS KEYED ALIKE
KBD = KEYBOARD
KIT = KITCHEN
KO = KNOCKOUT
KPL = KICKPLATE

L
L = ANGLE
L CL = LINEN CLOSET
LAD = LADDER
LAM = LAMINATE
LAU OR LDRY = LAUNDRY
LAV OR L = LAVATORY
LBL = LABEL
LC = LAUNDRY/LINEN CHUTE
LD OR LIN DIF = LINEAR DIFFUSER
LED = LIGHT EMITTING DIODE
LF = LINEAR FEET (FOOT) OR LINED FIGURED
LIB = LIBRARY
LIN = LINEAR
LIQ = LIQUID
LKR = LOCKER
LL = LEAD LINED
LM = LATEX MASTIC FLOORING
LMC = LINEAR METAL CEILING
LMST = LIMESTONE
LN = LINOLEUM
LOC = LOCATION
LP = LIGHTPROOF
LP = LIGHTPROOF LOUVER
LPG = LIQUID PETROLEUM GAS
LRG = LARGE
LS = LARGE SCALE
LT = LIGHT
LT SW = LIGHT SWITCH
LTD = LIMITED
LTG = LIGHTING
LVR = LOUVER
LWC = LINEAR WOOD CEILING
LYR = LAYER
LYT= LAYOUT

M
M = MALE
M = MECHANICAL SEAL FOR LIGHT PROOF & SOUND RETARDING
MACH = MACHINE
MAG LOCK = MAGNETIC LOCK
MAINT = MAINTENANCE
MAN = MANUAL
MATL OR MAT = MATERIAL
MAX = MAXIMUM
MB = MAIL BOX
MBR = MASTER BEDROOM
MC = MEDICINE CABINET
MC = MULTI COLOR COATING
MCB = METAL CORNER BEAD
MDF = MEDIUM DENSITY FIBERBOARD
MECH = MECHANICAL
MED = MEDIUM
MEL = MELAMINE
MEMB = MEMBRANE
MEP = MECHANICAL, ELECTRICAL AND PLUMBING
MEZZ = MEZZANINE
MF = MILL FINISH OR PLASTIC FLOOR
MFR OR MFG = MANUFACTURER OR MANUFACTURING
MGT = MANAGEMENT
MHO = MAGNETIC HOLD OPEN
MIC = MICROPHONE
MIN = MINIMUM
MIN = MINUTE, FIRE RATING
MIRR OR MIR = MIRROR
MISC = MISCELLANEOUS
MIT OR MITR = MITER
MKBD = MARKER BOARD
MKD = MASTERKEYED
MLDG = MOULDING
MLWK = MILLWORK
MO = MASONRY OPENING
MOD = MODIFY
MOD BIT = MODIFIED BITUMEN
MON = MONITOR
MONO = MONOLITHIC
MPC = METAL PAN CEILING
MR = MOISTURE RESISTANT
MRB = MARBLE BASE
MRF = MARBLE FLOOR
MRT = MARBLE THRESHOLD
MTD = MOUNTED OR MOUNTING
MTG = MEETING
MTL OR MET = METAL
MULT = MULTIPLE
MW OR MICRO = MICROWAVE
MWP OR WPM = MEMBRANE WATERPROOFING

N
N = NORTH
NAT = NATURAL
NF = NATURAL FINISH
NIC = NOT IN CONTRACT
NL = NIGHT LIGHT
NO = NUMBER
NOM = NOMINAL
NORM = NORMAL
NP = NO PAINT
NT = SPECIFIC DOOR NOTE
NT = SPECIFIC FINISH NOTE
NTS = NOT TO SCALE

O
OA = OVERALL
OC = ON CENTER
OCC = OCCUPANT
OF/CI = OWNER FURNISHED/CONTRACTOR INSTALLED
OF/OI = OWNER FURNISHED/OWNER INSTALLED
OFS = OVERFLOW SCUPPER
OH = OVERHEAD
OHS = OVERHEAD STOP
OPNG = OPENING
OPQ = OPAQUE
OPR = OPERABLE
OPT = OPTIONAL
OR = OUTSIDE RADIUS
ORD = OVERFLOW ROOF DRAIN
ORN = ORNAMENTAL
OVFL = OVERFLOW

P
PA = PUBLIC ADDRESS
PANB = PANIC BOLT
PAR = PARAPET OR PARALLEL
PARQ = PARQUET FLOORING
PART = PARTIAL
PB = PAINTED BASE
PB = PANIC BAR
PB = PUSHBUTTON
PBD = PARTICLEBOARD
PC = PERSONAL COMPUTER OR PORTLAND CEMENT
PCC OR PC = PRECAST CONCRETE
PCD = PAPER CUP DISPENSER
PE = PHOTOELECTRIC
PED = PEDESTAL
PEN = PENETRATE
PEND = PENDANT
PFW = POLYPROPYLENE FABRIC WALLCOVERING
PGBD = PEGBOARD
PH = PENTHOUSE
PH = PHASE
PH OR P = PANIC HARDWARE
PHAR OR PHARM = PHARMACY
PIL = PILASTER
PIV = PIVOTED
PL = PROPERTY LINE
PLAM = PLASTIC LAMINATE
PLAS OR PL = PLASTER OR PLASTIC
PLBG = PLUMBING
PNL = PANEL
PP = PUSH PLATE
PP = PUSH/PULL
PP PL = PUSH/PULL PLATE
PR = PAIR
PREFAB = PREFABRICATE
PRELIM = PRELIMINARY
PRES = PLASTIC RESIN
PRKG = PARKING
PROJ = PROJECT
PROP = PROPERTY
PS = PULL STATION
PSH = PURSE SHELF
PT = POST TENSIONED
PT OR P = PAINT
PTD OR PTC = PAPER TOWEL DISPENSER
PTN OR PART = PARTITION
PTR = PRINTER
PVC = POLYVINYL CHLORIDE (PLASTIC)
PW = PASS WINDOW
PWP = PLASTIC WALL PROTECTION

Q
QA = QUALITY ASSURANCE
QAL = QUALITY
QT = QUARRY TILE
QTB = QUARRY TILE BASE
QTF = QUARRY TILE FLOOR
QTY = QUANTITY

R
R = RADIUS
R = RISER
RAB = RABBETED
RAF = RESILIENT ATHLETIC FLOORING
RB = RESILIENT BASE
RB = RUBBER BASE
RB HK OR RH = ROBE HOOK
RBR = RUBBER
RBRB = RUBBER BASE
RC = REINFORCED CONCRETE
RCP = REFLECTED CEILING PLAN
RCVR = RECEIVER
RD = ROOF DRAIN
RDP = ROOF DAVIT POST
RE = RELOCATE EXISTING
REC = RECESSED
RECP = RECEPTION
RECPT = RECEPTACLE
REF OR REFR = REFRIGERATOR
REINF = REINFORCE
REM = REMOVABLE
REPL = REPLACE
REQ OR REQD = REQUIRE OR REQUIRED
REST = RESTROOM
REV = REVISION OR REVERSE
REX = REQUEST TO EXIT
RF OR RSF = RESILIENT FLOORING OR RESILIENT SHEET FLOORING
RFG OR ROOF = ROOFING
RFS = ROOM FINISHES SCHEDULE
RH = ROOF HATCH
RM = ROOM
RO = ROUGH OPENING
ROS = ROOM OPENING SCHEDULE
ROW = RIGHT OF WAY
RR = REMOTE RELEASE BUTTON
RSTN = ROUGH STONE
RTF = RUBBER TILE FLOOR
RTG = RATING
RTO = ROOF TIE OFF POST
RTS = RESILIENT TRANSITION STRIP
RTU = ROOF TOP UNIT
RWC = RAIN WATER CONDUCTOR
RWL = RAIN WATER LEADER

S
S = SOUTH OR SINK
SAF=SPRAYED APPLIED FIRE PROOFING
SALV = SALVAGE
SAN = SANITARY
SB = SPLASH BLOCK
SC = SOLID CORE
SC = SPECIAL COATING, HIGH BUILD GLAZED COATING
SCHED = SCHEDULE
SCP OR SCUP = SCUPPER
SDA = SPECIAL DOOR ASSEMBLY
SECT = SECTION
SEP = SEPARATE
SGD = SLIDING GLASS DOOR
SHDR OR SD = SHOWER DRAIN
SHT = SHEET
SIM = SIMILAR
SK = SKETCH
SKLT = SKYLIGHT
SL = SEALER
SLNT = SEALANT
SM = SMALL
SMLS = SEAMLESS
SNC OR SNV = SANITARY NAPKIN CABINET (VENDING)
SNDU OR SND = SANITARY NAPKIN DISPOSAL UNIT
SP = STANDPIPE
SPEC = SPECIFICATION
SPR = SINGLE PLY ROOFING
SS = SERVICE SINK
SS = SOLID SURFACE
SSF = SOLID SURFACE FABRICATION
SST = STAINLESS STEEL
ST = STAIRS
ST OR STNT = STONE TILE
STC = SOUND TRANSMISSION CLASS
STD = STANDARD
STN = STONE
STNB = STONE BASE
STOR = STORAGE
STR = STRAIGHT
STR = STRINGERS
STRUCT = STRUCTURAL
SUPVR OR SUPR = SUPERVISOR
SV = SHEET VINYL
SV = SHEET VINYL
SVT = SOLID VINYL FLOOR TILE
SW = SWITCH
SWDR = SWING DOOR
SYM = SYMBOL
SYS = SYSTEM

T
T = THERMOSTRAT
T = TREAD
T OR (T) = TEMPERED GLASS
TB = THROUGH BOLT OR TOWEL BAR
TC = TERRA COTTA
TDISP OR TH = TISSUE DISPENSER, TISSUE HOLDER
TECH = TECHNICAL
TEL= TELEPHONE
TEMP = TEMPORARY
TER OR TERR = TERRAZZO
THERM = THERMAL
THK = THICKNESS
THRUOUT OR TO = THROUGHOUT
TK BD OR TBD = TACKBOARD
TL = TIMER LOCK (ELECTRIC LOCL/UNLOCK USING A TIMER

TLT = TOILET
TMPD GL OR GL (T) = TEMPERED GLASS
TN = TRUE NORTH
TNL = TUNNEL
TOB = TOP OF BEAM
TOC= TABLE OF CONTENT
TOF = TOP OF FOOTING/FOUNDATION
TOS = TOP OF STEEL
TOW = TOP OF WALL
TP OR TPART = TOILET PARTITION
TPH = TOILET PAPER HOLDER
TR = TREAD OR TOWEL RACK
TS = TRANSITION STRIP
TS = TUBE STEEL
TSCD = TOILET SEAT COVER DISCPENSER
TSH = TOWEL SHELF
TSTAT OR T = THERMOSTAT
TT = TERRAZZO TILE
TV = TELEVISION
TWF = THROUGH WALL FLASHING
TYP = TYPICAL

U
UC OR U = UNDERCUT
UCD = UNDERCUT DOOR
UCL = UNDER CABINET LIGHT
UL = UNDERWRITERS LABORATORIES
UNO = UNLESS NOTED OTHERWISE
UON = UNLESS OTHERWISE NOTED
UPS = UNINTERRUPTIBLE POWER SUPPLY
US = URINAL SCREEN

V
VAN = VANITY
VAR = VARIATION OR VARIES
VB = VAPOR BARRIER
VB = VINYL BASE
VCT = VINYL COMPOSITION TILE
VD = VOICE/DATA
VDB = VISUAL DISPLAY BOARD
VEH = VEHICLE
VENT = VENTILATION OR VENTILATOR
VERT = VERTICAL
VEST = VESTIBULE
VID OR V = VIDEO
VIF = VERIFY IN FIELD
VNR = VENEER
VP = VANEER PLASTER
VR = VAPOR RETARDER
VRFY OR VER = VERIFY
VTR = VENT THROUGH ROOF
VWC = VINYL WALL COVERING
VWF = VINYL WALL FABRIC

W
W = WEST
W/ = WITH
W/O = WITHOUT
WB = WALL BORDER
WB OR WDB = WOOD BASE
WC = WATER CLOSET
WC OR W = WALL COVERING
WD = WOOD
WD = WOOD
WDP = WOOD PANELLING
WDW = WINDOW
WFAB OR WF = WALL FABRIC
WH = WEEP HOLE
WHCH = WHEELCHAIR
WOM = WALK OFF MAT
WP = WALL PROTECTION
WP = WORKING POINT
WPM = WATERPROOF MEMBRANE
WR = WEATHER RESISTANT
WS = WALL STOP
WS = WEATHERSTRIP
WSCT = WAINSCOT
WSF = WELDED SEAM SHEET FLOORING
WT = WATERTIGHT
WT = WINDOW TREATMENT
WWF = WELDED WIRE FABRIC

X
XPS = EXTRUDED POLYSTYRENE BOARD (INSULATION)

Y
YD = YARD

ACCESSIBLITY SYMBOLOGY LEGEND

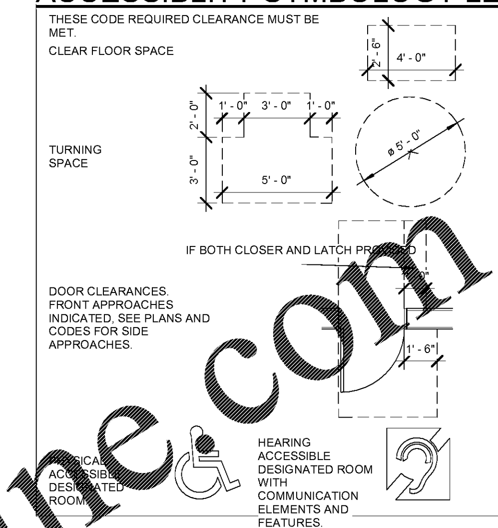

Index to Drawing Symbols

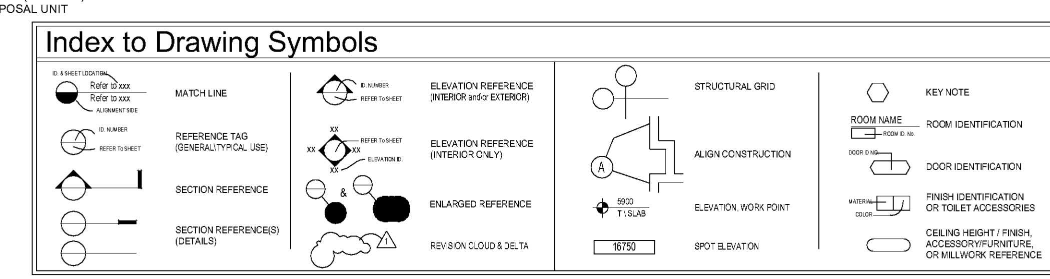

THESE DRAWINGS ARE PRELIMINARY IN NATURE AND INTENDED FOR REVIEW AND PERMITTING. DRAWINGS ARE NOT TO BE USED FOR CONSTRUCTION WITHOUT ARCHITECT'S AND ENGINEER'S SIGNATURE AND THEIR DATE OF ISSUE FOR CONSTRUCTION.

RECORD

JSA ARCHITECTS
9726 E. 42nd St. SUITE 153
TULSA, OK 74146
918.640.6800
JHNSANFORD@AOL.COM

Copyright 2019 John Sanford

JOHN SANFORD, AIA, NCARB
TN LICENSE #106056
4/4/2019
1:55:17 PM

NOT VALID FOR CONSTRUCTION UNLESS SIGNED IN THIS BLOCK

PROPOSED HOLIDAY INN LI 9383
215 CRACKER BARREL DR., CLARKSVILLE
MONTGOMERY COUNTY, TENNESSEE

PERMIT NO: ------
4/4/2019
1:55:17 PM

No.	Description	Date

SHEET
A003
SYMBOLS & ABBREVIATIONS

Order Plans @ www.LDILine.com