FIRE PROTECTION DATA

FIRE PROTECTION DATA	
OCCUPANCY CLASSIFICATION:	ORDINARY GROUP II
SYSTEM TYPE:	INTERIOR HEATED SPACES - WET PIPE UNHEATED STAIRWAYS - DRY PIPE EXTERIOR CANOPIES - DRY PIPE OPEN PARKING GARAGES - DRY PIPE
DESIGN DENSITY:	.20 GPM/SQ. FT.
HYDRAULIC REMOTE AREA:	1500 SQ. FT. UNLESS OTHERWISE NOTED
SPRINKLER ORIFICE SIZE:	1/2"
DURATION OF SUPPLY:	30 MIN.
MAX. COVERAGE./SPRINKLER HEAD:	225 SQ. FT.

FIRE PROTECTION CRITERIA

SCOPE OF WORK:
FIRE PROTECTION SYSTEM FOR NEW CONSTRUCTION. FIRE PROTECTION CONTRACTOR SHALL PROVIDE A FULL WET AUTOMATIC FIRE SPRINKLER SYSTEM IN ACCORDANCE WITH NFPA 13, LATEST ENFORCED EDITION, ALONG WITH ALL LOCAL REQUIREMENTS.

ACCEPTANCE TEST CRITERIA:
TESTING OF FIRE PROTECTION SYSTEM AND ITS COMPONENTS SHALL COMPLY WITH ALL APPLICABLE ITEMS PER NFPA 13, LATEST ENFORCED EDITION, FIGURE 10-1(A), CONTRACTOR'S MATERIAL AND TEST CERTIFICATE FOR ABOVE AND UNDERGROUND PIPING.

STRUCTURAL SUPPORT AND STRUCTURAL OPENINGS:
THE SUPPORT SYSTEM FOR THIS BUILDING SHALL BE DESIGNED BY A STATE LICENSED STRUCTURAL ENGINEER IN ACCORDANCE WITH F.A.C., PLEASE REFER TO STRUCTURAL DRAWINGS FOR LIVE AND DEAD LOADING INFORMATION. THERE ARE NO SIGNIFICANT STRUCTURAL OPENINGS THAT WILL BE REQUIRED FOR THIS FIRE SPRINKLER SYSTEM.

POINT OF SERVICE:
POINT OF CONNECTION SHOWN ON BUILDING PLAN.

APPLICABLE NFPA STANDARD TO BE APPLIED:
NFPA 13, LATEST ENFORCED EDITION INSTALLATION OF FIRE PROTECTION SYSTEM.
NFPA 24, LATEST ENFORCED EDITION INSTALLATION OF PRIVATE FIRE SERVICE MAINS.
NFPA 25, LATEST ENFORCED EDITION STANDARD FOR INSPECTION, TESTING AND MAINTENANCE OF WATER BASED FIRE PROTECTION.

CLASSIFICATION OF HAZARD OCCUPANCY OF ALL AREAS OR ROOMS:

SPRINKLER HEADS:
155°F QUICK RESPONSE THROUGHOUT BUILDING, UNLESS OTHERWISE NOTED.

SPACING:
MAXIMUM PROTECTION SHALL BE 225 SQ. FT. FOR ALL LIGHT HAZARD AREAS, AND 130 SQ. FT. FOR ALL ORDINARY HAZARD GROUP I AND II AREAS, UNLESS OTHERWISE NOTED.

MICROBIAL INDUCED CORROSION (MIC):
CONTRACTOR SHALL ORDER AND OBTAIN A TEST LAB REPORT INDICATING THAT NO MIC IS PRESENT IN THE SYSTEM. PROVIDE A CHEMICAL INJECTION SYSTEM, AND PROVIDE BIOCIDES AND CORROSION INHIBITORS AS REQUIRED TO ELIMINATE MIC FOUND IN THE SYSTEM.

BACKFLOW PREVENTION AND METERING SPECIFICATIONS:
WHERE REQUIRED, THE BACKFLOW PREVENTION AND METERING EQUIPMENT SHALL BE INSTALLED BY A MINIMUM OF A CLASS V CONTRACTOR AS LICENSED BY THE STATE FIRE MARSHAL. THE MAXIMUM ALLOWABLE PRESSURE LOSS ACROSS THE DEVICE SHALL BE 8 PSI AT SYSTEM DEMAND.

QUALITY AND PERFORMANCE SPECIFICATIONS OF FIRE PROTECTION COMPONENTS:
ALL FIRE PROTECTION COMPONENTS SHALL BE UL OR FM LISTED.

TENANT CRITERIA:
WHERE APPLICABLE, CONTRACTOR SHALL ACQUIRE A COPY OF THE TENANT'S WORK LETTER FROM THE OWNER. ALL CRITERIA IN WORK LETTER MUST BE MET, INCLUDING BUT NOT LIMITED TO ZONING REQUIREMENTS, PIPE MOUNTING HEIGHTS, PRESSURE/FLOW REQUIREMENTS, AND SIZING.

PLUMBING SPECIFICATIONS:

1.0 GENERAL

1.1 SUMMARY OF WORK

1. THE CONTRACTOR IS RESPONSIBLE FOR ALL WORK, MATERIALS, AND LABOR TO SATISFY A COMPLETE WORKING SYSTEM WHETHER SPECIFIED OR IMPLIED.
2. ALL WORK IS TO BE PERFORMED IN STRICT ACCORDANCE WITH THE 2012 INTERNATIONAL PLUMBING CODE, ALL LOCAL CODES, AND ALL OTHER REGULATIONS GOVERNING WORK OF THIS NATURE.
3. THE CONTRACTOR SHALL, BEFORE SUBMITTING ANY PROPOSAL, EXAMINE THE PROPOSED SITE AND SHALL DETERMINE FOR HIMSELF THE CONDITIONS THAT MAY AFFECT THE WORK. NO ALLOWANCE SHALL BE MADE IF THE CONTRACTOR FAILS TO MAKE SUCH EXAMINATIONS.
4. ALL EQUIPMENT AND MATERIALS SHALL BE AS SPECIFIED OR "APPROVED EQUAL" BY ENGINEER OR ARCHITECT.

1.2 PERMITS

1. THE CONTRACTOR SHALL SECURE ALL PERMITS OR APPLICATIONS AND PAY ANY AND ALL FEES PERTAINING TO THE CONTRACT.

1.3 SHOP DRAWINGS/AS-BUILTS

1. CONTRACTOR SHALL SUBMIT (3) SETS OF SHOP DRAWINGS AND EQUIPMENT CUT SHEETS TO THE ENGINEER FOR APPROVAL PRIOR TO STARTING ANY WORK.

1.4 DOMESTIC WATER SUPPLY PIPING

1. UNDERGROUND: PROVIDE TYPE "K" SOFT DRAWN COPPER TUBING WITH BRAZED CONNECTIONS.
2. ABOVE GROUND: ALL PIPING SHALL BE COPPER TUBING ASTM B 88 TYPE L, HARD DRAWN OR SCHEDULE 40 CPVC.
   A. FITTINGS: ANSI/ASME B16.18, CAST BRASS, OR ANSI ASME B16.22, WROUGHT COPPER OR ASTM F438 FOR SCHEDULE 40.
   B. JOINTS: ANSI/ASTM B32 SOLDER GRADE 95TA OR AWS A5.8 BCuP-2 BRAZING ALLOY OR ASTM F438 FOR SCHEDULE 40.
3. ALL HOT WATER PIPING 1 1/4" DIAMETER AND LESS SHALL HAVE 1" FIBERGLASS INSULATION. ALL HOT WATER PIPING 1-1/2" AND GREATER SHALL HAVE 2" FIBERGLASS INSULATION.
4. ALL COLD WATER PIPING TO BE INSULATED WITH 1" FOAM INSULATION.
5. SHUTOFF VALVES, WITH UNIONS, SHALL BE PROVIDED FOR SERVICE TO EACH PLUMBING FIXTURE OR FOOD SERVICE EQUIPMENT ITEM TO FACILITATE ISOLATION FOR REPAIR OR REPLACEMENT. VALVES SHALL BE EQUAL TO JENKINS #902-T BALL VALVE, CHROME-FINISHED BRONZE, TEFLON SEATS AND PACKING, 400LB. W.O.G., SOLDER END.
6. PROVIDE WATER HAMMER ARRESTORS AT EACH FIXTURE OR GROUP OF FIXTURES AS REQUIRED.
7. PROVIDE THERMOSTATIC MIXING VALVES SET AT 110 DEGREES FAHRENHEIT AT EACH LAVATORY, HAND WASH SINK, AND SINK ACCESSIBLE TO THE PUBLIC.
8. NO DOMESTIC HOT WATER HIGHER THEN 140 DEGREES FAHRENHEIT SHALL BE PERMITTED WITHIN CPVC PIPING OR DRAINED TO PVC SANITARY PIPING.
9. CPVC PIPING SHALL NOT BE USED IN AIR PLENUM CEILINGS AND SHALL NOT CROSS FIRE RATED WALLS, CEILINGS, OR FLOORS.

1.5 SANITARY/STORM DRAINAGE AND VENT PIPING

1. ABOVE GRADE: ALL PIPING SHALL BE CAST IRON ASTM A74 WEIGHT WITH CAST IRON FITTINGS, JOINTS HUB-AND-SPIGOT, CISPI HSN COMPRESSION TYPE WITH ASTM ... NEOPRENE GASKETS OR PVC ASTM D2665 SCHEDULE 40 WITH PVC FITTINGS, JOINTS HUB-AND-SPIGOT WITH SOLVENT WELDS.
2. BELOW GRADE: ALL PIPING SHALL BE CAST IRON ASTM A74 SERVICE WEIGHT WITH CAST IRON FITTINGS, JOINTS ASTM C 564 WITH NEOPRENE GASKETS OR PVC ASTM D2665 SCHEDULE 40 DWV WITH PVC FITTINGS, JOINTS HUB-AND-SPIGOT WITH SOLVENT WELDS.
3. PVC PIPING SHALL NOT BE USED IN AIR PLENUM CEILINGS AND SHALL NOT CROSS FIRE RATED WALLS, CEILINGS, OR FLOORS.
4. DRAINAGE PIPING SHALL BE RUN AS STRAIGHT AS POSSIBLE AND SHALL HAVE LONG RADIUS FITTINGS.
5. DRAINAGE PIPING 2" SIZE AND SMALLER SHALL RUN AT A UNIFORM GRADE OF AT LEAST 1/4" PER FOOT, AND PIPING LARGER THAN 2" SHALL BE RUN AT A GRADE OF NO LESS THAN 1/8" PER FOOT.
6. ALL VENT PIPING SHALL BE SLOPED TO DRAIN BACK TO FIXTURES.
7. CONTRACTOR SHALL BE RESPONSIBLE FOR THE PROPER FLASHING OF THE VENT PIPING THROUGH THE ROOF.
8. ALL VENTS SHALL BE INSTALLED A MINIMUM OF TEN FEET FROM EQUIPMENT OUTSIDE AIR INTAKES.

1.6 NATURAL GAS PIPING

1. ABOVE GRADE: ALL PIPING SHALL BE ASTM A53, SCHEDULE 40 BLACK.
   A. FITTINGS: ASME B16.3, MALLEABLE IRON.
   B. JOINTS: SCREWED FOR PIPE 2 INCHES AND UNDER; AWS D1.1, WELDED, FOR PIPE OVER 2 INCHES.

1.7 PENETRATIONS

1. ALL STUB-INS AND/OR SLAB OR WALL PENETRATIONS TO BE PER INTERNATIONAL PLUMBING CODE. ALL PIPING PENETRATIONS OF BUILDING FOUNDATIONS OR FOOTINGS SHALL BE SLEEVED.

1.8 PIPE SUPPORTS

1. ABOVE GRADE: ALL PIPE SHALL BE SUPPORTED FROM THE BUILDING STRUCTURE IN A NEAT AND WORKMANLIKE MANNER. THE USE OF WIRE AND PREFORMED METAL TO SUPPORT PIPES WILL NOT BE PERMITTED. SPACING OF PIPE SUPPORTS SHALL BE AS SPECIFIED IN CHAPTER 8 OF THE INTERNATIONAL PLUMBING CODE.
2. BELOW GRADE: EARTH SHALL BE EXCAVATED TO A MINIMUM DEPTH WITH EVEN SURFACE TO INSURE SOLID BEARING OF PIPE FOR ENTIRE LENGTH.
   A. INTERIOR: THE PIPE SHALL BE INSTALLED (UNLESS OTHERWISE SPECIFIED) A MINIMUM OF 4 INCHES BELOW THE BOTTOM OF THE SLAB AND SHALL NOT BE IN ANY DIRECT CONTACT WITH THE CONCRETE AT ANY POINT.
   B. EXTERIOR: THE WATER PIPE SHALL HAVE A MINIMUM OF 42" OF COVER AND THE SANITARY WASTE PIPE SHALL HAVE A MINIMUM OF 24" OF COVER.

1.9 PIPE INSULATION

1. INSULATE (AS ALLOWED BY CODE) ALL ... SERVICE PIPING AS FOLLOWS: STORM WATER PIPING. PROVIDE 1" PREFORMED FIBERGLASS ASJ/SS-11, ... SMOKE DEVELOPED 50, ASTM C547. FOR CONDENSATE PIPING PROVIDE 1/2" THICK INSULATION OF SAME CHARACTERISTICS AS LISTED FOR 1" ABOVE. WHERE PERMITTED BY LOCAL CODES,PROVIDE 1/2" SELF ADHESIVE UNICELLULAR FOAM PIPE INSULATION WITH PREFORMED PVC FITTING COVERS EQUAL TO SELF ADHESIVE ARMSTRONG 2000 WITH K FACTOR OF 0.27 AT 75 DEGREES MEAN TEMPERATURE. INSULATE ANY EXPOSED CONDENSATE OR WASTE PIPING WITH FLUID TEMPERATURE BELOW 60 DEGREES F.

1.10 ACCESSORIES

1. PRESSURE REDUCING VALVES
   A. WATTS U5B OR EQUAL
   B. SET AT 70 PSI.

1.11 MISCELLANEOUS

1. COORDINATE INSTALLATION OF ALL ROOF FLASHING AT ROOF PENETRATIONS.
2. DO NOT SCALE THIS DRAWING FOR EXACT DIMENSIONS. VERIFY ALL FIGURES, CONDITIONS, AND DIMENSIONS AT THE JOB SITE.
3. THE PLUMBING PLANS ARE INTENDED TO BE DIAGRAMMATIC AND ARE BASED ON ONE MANUFACTURER'S EQUIPMENT. THEY ARE NOT INTENDED TO SHOW EVERY ITEM IN ITS EXACT LOCATION, THE EXACT DIMENSIONS, OR ALL THE DETAILS OF THE EQUIPMENT. THE CONTRACTOR SHALL VERIFY THE ACTUAL DIMENSIONS OF THE EQUIPMENT PROPOSED TO ENSURE THAT THE EQUIPMENT WILL FIT IN THE AVAILABLE SPACE.
4. ALL PIPING TO BE PROPERLY LABELED.

1.12 TESTING

1. PLUMBING SYSTEMS SHALL BE FLOW AND PRESSURE TESTED IN ACCORDANCE WITH STANDARD PRACTICE AND THE INTERNATIONAL PLUMBING CODE.
2. TEST WATER SYSTEM UNDER 150 PSIG HYDROSTATIC PRESSURE, FOR FOUR (4) HOURS MINIMUM. WHEN TESTING INDICATES MATERIALS OR WORKMANSHIP IS DEFICIENT, REPLACE AS REQUIRED, AND REPEAT TEST UNTIL STANDARDS ARE ACHIEVED.

1.13 GUARANTEE

1. MATERIALS, EQUIPMENT AND INSTALLATION SHALL BE GUARANTEED FOR A PERIOD OF ONE (1) YEAR FROM DATE OF ACCEPTANCE. DEFECTS WHICH APPEAR DURING THAT PERIOD SHALL BE CORRECTED AT THE CONTRACTOR'S EXPENSE.
2. FOR THE SAME PERIOD, THE PLUMBING CONTRACTOR SHALL BE RESPONSIBLE FOR ANY DAMAGE TO PREMISE CAUSED BY DEFECTS IN WORKMANSHIP OR IN THE WORK OR EQUIPMENT FURNISHED AND/OR INSTALLED BY HIM.

SUBMITTAL NOTE TO GC AND SUB-CONTRACTORS :

COORDINATE ALL MECHANICAL, ELECTRICAL, FIRE ALARM, SPRINKLER AND PLUMBING DEVICES/EQUIPMENT SUBMITTALS WITH ESSENTIAL PARTIES INCLUDING BUT NOT LIMITED TO: ELECTRICAL, MECHANICAL, PLUMBING, FIRE ALARM, SPRINKLER, AND MILLWORK CONTRACTORS. PRIOR TO SENDING SUBMITTALS FOR APPROVAL, ALL AFFECTED DISCIPLINES MUST INCLUDE A SIGNATURE OF APPROVAL ENSURING THAT ALL NECESSARY PARTIES HAVE HAD AN OPPORTUNITY TO REVIEW SAID SUBMITTAL AND RAISE ANY CONCERNS ABOUT EQUIPMENT BEING USED AND THE MEANS AND METHODS TO INSTALL SUCH EQUIPMENT. UPON RECEIVING A SUBMITTAL WITHOUT THE NECESSARY PARTY SIGNATURES, THE SUBMITTAL WILL IMMEDIATELY BE REJECTED WITHOUT REVIEW UNTIL THE SIGNATURES HAVE BEEN PROVIDED.

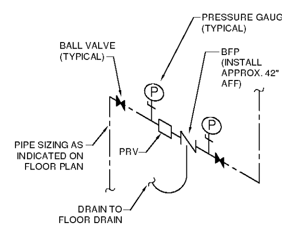

2 / P-0.1 DETAIL - DOMESTIC WATER SERVICE ENTRANCE
NOT TO SCALE

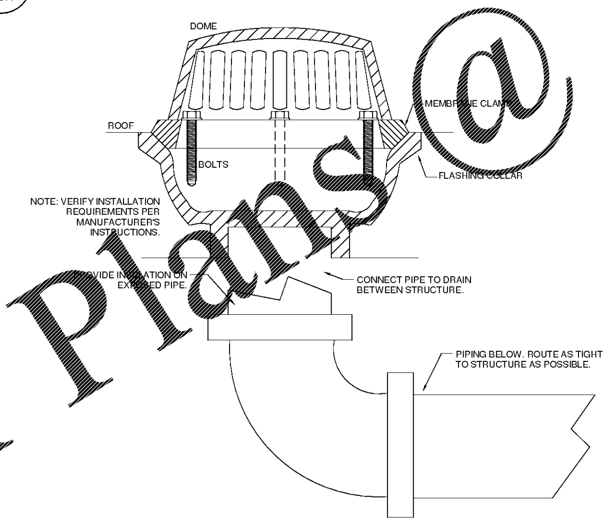

3 / P-0.1 DETAIL - ROOF DRAIN
NOT TO SCALE

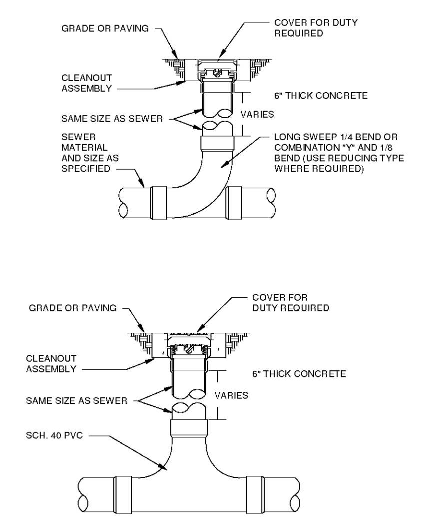

1 / P-0.1 DETAIL - TYPICAL EXTERIOR CLEANOUTS
NOT TO SCALE

PLUMBING LEGEND

SYMBOL	DESCRIPTION
SAN	SANITARY PIPING
DCW	DOMESTIC COLD WATER PIPING
DHW	DOMESTIC HOT WATER PIPING
DHWR	DOMESTIC HOT WATER RETURN PIPING
V	VENT PIPING
G	GAS PIPING
GW	GREASE PIPING
RW	PRIMARY STORM PIPING
ORW	OVERFLOW STORM PIPING
O2	OXYGEN PIPING
VAC	GAS EVAC PIPING
	FLOOR CLEANOUT
	FLOOR DRAIN
	FLOOR SINK
	VENT THRU ROOF
	BALL VALVE
G	GAS METER
M	WATER METER
	PIPE UP
	PIPE DOWN
	GAS COCK
	HOSE BIBB
	FDC
	ROOF DRAIN
	WATER HAMMER ARRESTOR
	P-TRAP

ABBREVIATIONS:

ACC	ABOVE ACCESSIBLE CEILING
ACT	ABOVE COUNTER TOP
ADA	AMERICANS WITH DISABILITIES ACT
AFF	ABOVE FINISHED FLOOR
ALUM	ALUMINUM
APR	AIR PRESSURE RESISTANT
ASME	AMERICAN SOCIETY OF MECHANICAL ENGINEERS
ASPE	AMERICAN SOCIETY OF PLUMBING ENGINEERS
BFP	BACKFLOW PREVENTER
BOP	BOTTOM OF PIPE
BTU	BRITISH THERMAL UNIT
CFH	CUBIC FEET PER HOUR
CONT	CONTINUATION
DB	DOMESTIC WATER BOOSTER
DCV	DOUBLE CHECK VALVE ASSEMBLY
DCW	DOMESTIC COLD WATER
DHW	DOMESTIC HOT WATER
ET	EXPANSION TANK
EXIST	EXISTING
FCO	FLOOR CLEANOUT
FD	FLOOR DRAIN
FDC	FIRE DEPARTMENT CONNECTION
FL	FLOOR
FM	FORCE MAIN
FP	FIRE PROTECTION
FPM	FEET PER MINUTE
FU	FIXTURE UNIT
GALV	GALVANIZED
GCO	GRADE CLEANOUT
GPH	GALLONS PER HOUR
GPM	GALLONS PER MINUTE
GW	GREASE WASTE
HB	HOSE BIB
HP	HORSEPOWER
HWR	HOT WATER RETURN
HWRP	HOT WATER CIRCULATING PUMP
IE	INVERT ELEVATION
ISO	ISOMETRIC
LAV	LAVATORY
MEZZ	MEZZANINE
MS	MOP SINK
NFPA	NATIONAL FIRE PROTECTION ASSOCIATION
NG	NATURAL GAS
NTS	NOT TO SCALE
ORW	OVERFLOW RAIN WATER
PRV	PRESSURE REDUCING VALVE
PSI	POUNDS PER SQUARE INCH
PSIG	POUNDS PER SQUARE INCH GAUGE
PVC	POLYVINYL CHLORIDE
RD	ROOF DRAIN
RPM	REVOLUTIONS PER MINUTE
RPZ	REDUCED PRESSURE ZONE
RW	RAIN WATER
SAN	SANITARY
SH	SHOWER
SK	SINK
SP	SUMP PUMP
SS	STAINLESS STEEL
TEMP	TEMPERTATURE
TYP	TYPICAL
UL	UNDERWRITERS LABORATORIES
V	VENT
VS	VENT STACK
VTR	VENT THROUGH ROOF
WC	WATER CLOSET
WCO	WALL CLEANOUT
WG	INCH WATER GAUGE
WH	WATER HEATER
WS	WATER SOFTENER

ISSUED FOR CONSTRUCTION

PHILLIPS
architects + engineers
770 394 1616

CONSULTANT

SAVANT Engineering, LLC
5064 Roswell Road, Suite D-301
Sandy Springs GA 30342 770.319.7400
©2019 Project 19010
CERTIFICATE OF AUTHORITY #2533

SEAL

TROY ALAN NEDERMAN
LICENSED PROFESSIONAL ENGINEER
5/21/19
20938
STATE OF MISSISSIPPI

ISSUE & REVISION RECORD

#	DATE	DESCRIPTION
	05/30/2019	PERMIT SUBMITTAL

This document is © Phillips Partnership, PC and is considered an Instrument of Service and is solely for use with respect to the project as indicated below. All rights reserved. This document may not be reproduced without the prior written consent of Phillips Partnership, PC

TENANT

PROJECT

THE PROMENADE

D'IBERVILLE, MS.

CLIENT

CBL
CBL PROPERTIES

PHILLIPS JOB NUMBER 1925401
ISSUE DATE 05/30/2019
DRAWN BY/CHECKED BY MTC / TAN
DRAWING TITLE
LEGENDS, SPECIFICATIONS, AND DETAILS - PLUMBING
SHEET NUMBER

P-0.1

THE PALISADES
5901 PEACHTREE DUNWOODY RD
BUILDING A SUITE 450
ATLANTA GEORGIA 30328

Order Plans @ www.LDILine.com