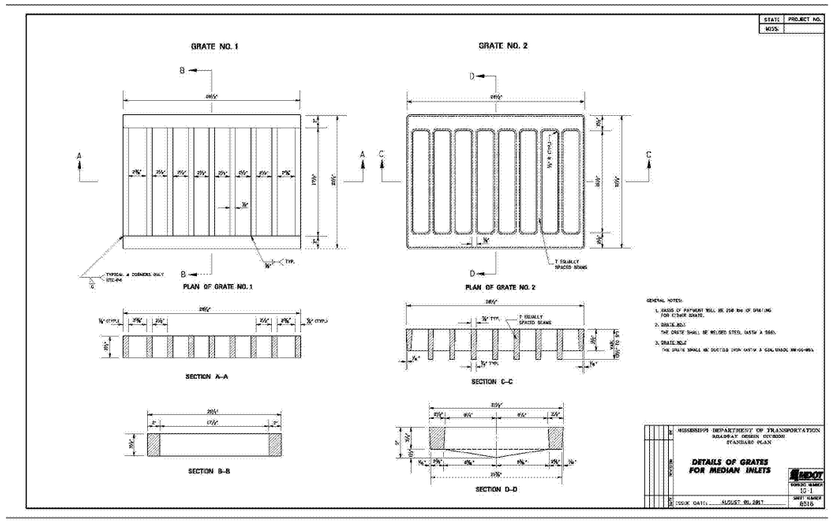

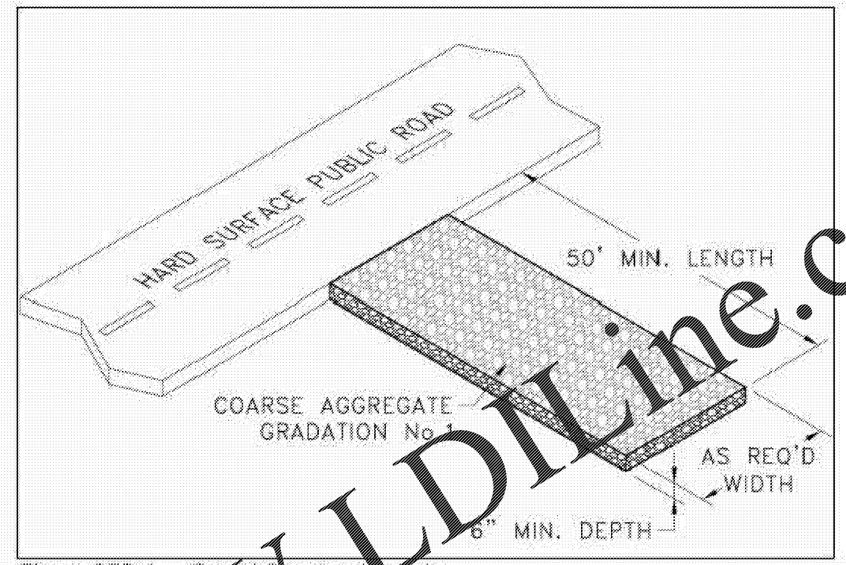

Figure CEP-1 Gravel Construction Exit

CONSTRUCTION EXIT PAD DETAIL

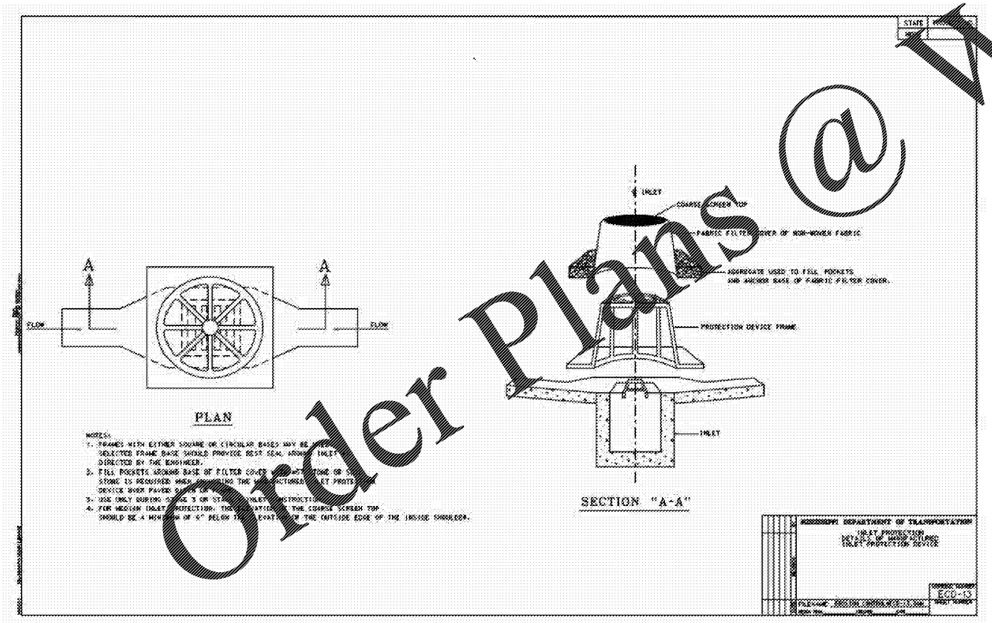

INLET PROTECTION DETAIL

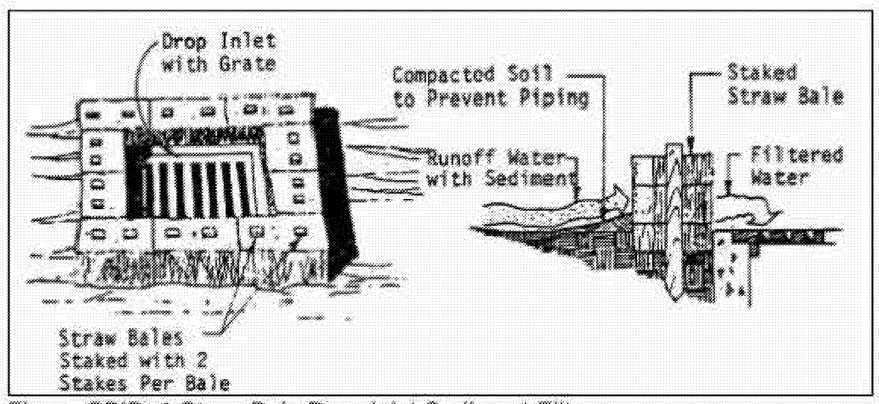

Figure SBIP- 1 Straw Bale Drop Inlet Sediment Filter

INLET PROTECTION DETAIL

Order Plans @ WWW.LDILine.com

PHILLIPS
architects + engineers
770.394.1616

CONSULTANT

HARRIS GIBSON & ASSOCIATES
CONSULTING ENGINEERS
CIVIL & STRUCTURAL SERVICES
1200 NORTH BROWN ROAD, SUITE 300
LAWRENCEVILLE, GEORGIA 30043
PHONE (770) 461-7560
FAX (770) 461-7750

SEAL

5/30/19

ISSUE & REVISION RECORD

#	DATE	DESCRIPTION
	05/30/2019	PERMIT SUBMITTAL

This document is © Phillips Partnership, PC and is considered an instrument of Service and is solely for use with respect to the project as indicated below. All rights reserved. This document may not be reproduced without the prior written consent of Phillips Partnership, PC.

TENANT

PROJECT

THE PROMENADE

D'IBERVILLE, MS.

CLIENT

CBL PROPERTIES

PHILLIPS JOB NUMBER 1925401

ISSUE DATE 05/30/2019

DRAWN BY/CHECKED BY

DRAWING TITLE

CONSTRUCTION DETAILS

SHEET NUMBER

C-5.3

THE PALISADES
5901 PEACHTREE DUNWOODY RD.
BUILDING A, SUITE 450
ATLANTA, GEORGIA 30328

HGA JOB No. 2019-049