LIGHTING FIXTURE SCHEDULE

TYPE	MANUFACTURER	CATALOG #	DESCRIPTION	VOLTS	WATTS	MOUNTING	REMARKS	FURNISHED BY
EM3	LITHONIA	ELA LED T WP M12	EMERGENCY LIGHT	9.6	1	CEILING / WALL	REMOTE EMERGENCY FIXTURE HEADS	OWNER
GG	US LED	DS-402U-2-UNV-QB3-NC-1-L	LED WALL PACK	120	42.5	WALL	WALL PACK	OWNER
MI	BODINE	ELI-S-250	EMERGENCY LIGHTING INVERTER	120	250	SURFACE	90 MINUTE EMERGENCY INVERTER	OWNER
T4E	EATON	4SNLED-LD5-64HL-UNV-L850-CD1-EL14W-LOV-U	4' LINEAR LED STRIP LIGHT, EMERGENCY	120	43	SURFACE	MOUNT TO BOTTOM OF METAL FRAMING	OWNER
TC	EATON	HBLED-LD5-18SE-W-UNV-L850-ED2-U	LED HIGH BAY	120	131	PENDANT	PENDANT MOUNT AT 18'-0" TO BOTTOM OF FIXTURE	OWNER
TCD	EATON	HBLED-LD5-18SE-W-UNV-L850-CD2-U	DIMMABLE LED HIGH BAY	120	131	PENDANT	PENDANT MOUNT AT 18'-0" TO BOTTOM OF FIXTURE	OWNER
TD	CROUSE-HINDS	MLL4/UNV1 TF / DP1050MTK	EXPLOSION PROOF FIXTURE / MOUNTING BRACKET	120	54.5	SURFACE	USE CEILING MOUNT BRACKET	OWNER
TDE	CROUSE-HINDS	MLL4/UNV1 S903 TF EM / DP1050MTK	EMERGENCY EXPLOSION PROOF FIXTURE / MOUNTING BRACKET	120	54.5	SURFACE	USE CEILING MOUNT BRACKET	OWNER
X	LITHONIA	LHQM LED R HO M6	EXIT SIGN W/ HO BATTERY AND BUG EYES	120	3	CEILING / WALL	EMERGENCY FIXTURE WITH 90 MINUTE BATTERY BACK-UP	OWNER

LT — NEW PANELBOARD

208Y/120V, 3PH, 4W
100A M.L.O.
10,000 AIC

SERVES: TIRE SHOP
LOCATION: SERVICE BAY
FED FROM: PANEL LP4
OVERCURRENT DEVICE: 100A

SURFACE MOUNT
GROUND BAR

CK	LOAD SERVED	WIRE	BRKR	PL	PHASE A		PHASE B		PHASE C		PL	BRKR	WIRE	LOAD SERVED	CK
1	LTG - SERVICE BAY EMERG. (N)	12	20	1	0.39	0.90					1	20	12	REC - SERVICE BAY (N)	2
3	LTG - OIL PIT (N)	12	20	1			0.76	1.08			1	20	12	REC - SERVICE BAY (N)	4
5	LTG - OIL PIT (N)	12	20	1					0.44	0.36	1	20	12	MADDENCO (N)	6
7	ADO-5 (N)	12	20	2	0.56	1.20					1	20	12	OIL PIT SUMP PUMP (N,4)	8
9	208V/1PH			-			0.56	1.20			1	20	12	OIL PIT SUMP PUMP (N,4)	10
11	ADO-6 (N)	12	20	2					0.56	1.20	1	20	12	FUEL MONITORING PANEL (N)	12
13	208V/1PH			-	0.56	0.53					1	20	12	EF-3 (N)	14
15	SPARE (N)	–	20	1			0.00	1.66			1	20	12	EF-2 (N)	16
17	SPARE (N)	–	20	1					0.00	1.66	1	20	12	EF-1 (N)	18
19	SPARE (N)	–	20	1	0.00	0.00					1	20	12	SPARE (N)	20
21	SPARE (N)	–	20	1			0.00	0.00			1	20	12	SPARE (N)	22
23	SPARE (N)	–	20	1					0.00	0.00	1	20	12	SPARE (N)	24
25	SPACE				0.00	0.00								SPACE	26
27	SPACE						0.00	0.00						SPACE	28
29	SPACE								0.00	0.00				SPACE	30
	TOTAL CONNECTED				4.14		5.26		4.21		KVA				
	TOTAL CONNECTED				34.5		43.8		35.1		AMPS				
	TOTAL LOAD				13.6		KVA		37.8		AMPS				
	PER NEC ARTICLE 220 FEEDER LOAD				14.0		KVA		38.9		AMPS				

LP4 — EXISTING PANELBOARD

208Y/120V, 3PH, 4W
400A M.L.O.

SERVES: TIRE SHOP
LOCATION: SERVICE BAY
FED FROM: EXTERIOR DISCONNECT
OVERCURRENT DEVICE: 400A

SURFACE MOUNT
GROUND BAR
ISOLATED GROUND BAR

CK	LOAD SERVED	WIRE	BRKR	PL	PHASE A		PHASE B		PHASE C		PL	BRKR	WIRE	LOAD SERVED	CK
1	spare (11)	–	20	1	0.00	4.20					2	50	6	WELDER (9)	2
3	tire balancer area recept (10)	–	20	1			1.00	4.20			-			208V/1PH	4
5	lobby recept (10)	–	20	1					1.08	4.20	2	50	6	WELDER (9)	6
7	TIRE BALANCER (9)	10	30	3	1.60	4.20					-			208V/1PH	8
9	208V/3PH			-			1.60	1.50			2	20	–	sp htr #1 tire bal area (10)	10
11	–			-					1.60	1.50	-			–	12
13	ac/split unit (10)	–	30	2	1.86	1.50					[illegible]	20	–	sp htr #2 tire bal area (10)	14
15	–			-			[illegible]	1.50			-			–	16
17	insta-hot bathroom	–	20	2					1.66	1.50	2	[illegible]	–	sp htr #1 tire bal area (10)	18
19	–			-	1.66	[illegible]					-			–	20
21	exist (12)	–	20	1			1.20	1.20			1	20	–	exist (12)	22
23	exist (12)	–	20	1					1.20	1.20	1	20	–	exist (12)	24
25	sub panel for ltg cont (10)	–	[illegible]	3	8.64	5.54					3	60	–	air compressor (10)	26
27	–			-			[illegible]	5.54			-			–	28
29	–								8.64	5.54	-			–	30
31	sw bay wall recept (10)	–	20	[illegible]	1.08	[illegible]					1	20	12	BUILDING SIGNS (2,8,9)	32
33	ne bay wall recept (10)	–	20	1			1.08	0.00			1	20	–	spare (11)	34
35	center bay column w/ recept (10)	–	20	1					1.08	1.08	1	20	–	tire storage recept (10)	36
37	evac unit ([illegible])	–	[illegible]	1	1.92	0.52					1	20	–	north bay lights (10)	38
39	wall packs ([illegible])	–	20	1			0.43	4.14			3	100	–	PANEL LT (N,14)	40
41	storage east lights (10)	–	20	1					1.36	5.26	-			–	42
43	SPEEDCO SIGN (2,8,9)	12	20	1	1.20	4.21					-			–	44
45	SPEEDCO SIGN (2,8,9)	12	20	1			1.20	0.36			1	20	–	fire alarm (10)	46
47	outside gfi (10)	–	20	1					1.08	1.08	1	20	–	office - gang recept (10)	48
49	BUILDING SIGNS (2,8,9)	12	20	1	1.20	1.92					1	20	–	lobby/tire bal/sm bay lights (10)	50
51	bathrm exhaust fan (10)	–	20	1			0.40	0.00			1	20	–	spare (11)	52
53	south bay lights (10)	–	20	1					0.52	0.00	1	20	–	spare (11)	54
55	tire storage recept (10)	–	20	1	1.08	0.70					1	20	–	air dryer (10)	56
57	center bay lights (10)	–	20	1			0.52	1.08			1	20	–	office recept	58
59	tire storage recept (10)	–	20	1					1.08	0.40	1	20	–	exhaust fan compr rm (10)	60
	TOTAL CONNECTED				45.7		37.5		41.1		KVA				
	TOTAL CONNECTED				381.2		312.1		342.2		AMPS				
	TOTAL LOAD				124.3		KVA		344.9		AMPS				
	PER NEC ARTICLE 220 FEEDER LOAD				126.4		KVA		351.0		AMPS				

PANELBOARD NOTES ()

(1) TERMINATE GROUND ON ISOLATED GROUND BUS.

(2) INSTALL LOCKING DEVICE FURNISHED WITH PANELBOARD (LOCK-OFF FOR MAINTENANCE).

(3) INSTALL LOCKING DEVICE FURNISHED WITH PANELBOARD (LOCK-ON FOR CRITICAL LOAD).

(4) GFI BREAKER FOR PERSONNEL PROTECTION (5 mA).

(5) GFI BREAKER FOR EQUIPMENT PROTECTION (30 mA).

(6) CONDUCTOR SIZE HAS BEEN INCREASED FOR VOLTAGE DROP. SIZE EQUIPMENT GROUNDING CONDUCTOR PROPORTIONALLY PER NEC.

(7) FACTORY WIRED TO LOAD.

(8) THRU CONTACTOR.

(9) EXISTING CIRCUIT BREAKER TO REMAIN. VERIFY CONDITION OF CIRCUIT BREAKER TO ENSURE THAT IT IS OPERATIONAL AND MEETS ALL U.L. RATINGS.

(10) EXISTING CIRCUIT TO REMAIN.

(11) PROVIDE HANDLE LOCK OFF DEVICE TO LOCK "SPARE" CIRCUIT BREAKER IN THE "OFF" POSITION. IF CIRCUIT BREAKER IS IDENTIFIED AS "EXISTING", FIELD VERIFY CIRCUIT BREAKER INDICATED IS NOT CONNECTED TO ANY LOAD AND UPDATE PANELBOARD CIRCUIT DIRECTORY IDENTIFYING CIRCUIT AS "SPARE".

(12) TRACE EXISTING CIRCUIT, IDENTIFY LOAD AND PROVIDE COMPLETE TYPEWRITTEN PANELBOARD IDENTIFICATION SCHEDULE AND PLACE ON INTERIOR OF PANELBOARD DOOR. IF CIRCUIT IS A "SPARE" THEN REFER TO PANELBOARD NOTE (11).

(13) PROVIDE LISTED HANDLE TIE AS INDICATED FOR MULTIWIRE BRANCH CIRCUIT.

(14) REFER TO ONE-LINE DIAGRAM FOR WIRE SIZES.

(N) NEW

ALL SWITCHBOARDS AND PANELBOARDS SHALL HAVE A COMMERCIALLY PRODUCED PERMANENT LABEL APPLIED TO WARN OF POTENTIAL ARC FLASH HAZARDS, IN ACCORDANCE WITH NEC 110.16 AND NFPA 70E. LABELING MAY BE COMPLETED BY EQUIPMENT MANUFACTURER, EQUIPMENT VENDOR/SUPPLIER, OR THE CONTRACTOR. THE CONTRACTOR SHALL VERIFY THAT ALL SWITCHBOARDS AND PANELBOARDS ARE PROPERLY LABELED IN THE FIELD.

EXISTING CIRCUITRY IS BASED ON ORIGINAL BUILDING PLANS. IF EXISTING CIRCUITS TO REMAIN ARE NOT AS SHOWN ON THE PANELBOARD SCHEDULES, ARRANGE NEW CIRCUITS BASED UPON PRESENT LOCATION OF EXISTING CIRCUITS TO REMAIN SHOWN IN LOWERCASE.

EC SHALL MATCH TYPE AND AIC RATINGS OF EXISTING CIRCUIT BREAKERS AND MAINTAIN SERIES RATING OF BREAKERS.

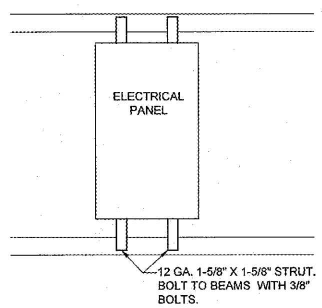

5 STANDARD ELECTRICAL PANEL MOUNTING DETAIL
SCALE: N.T.S.

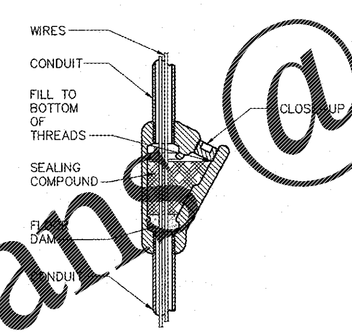

4 CONDUIT SEAL-OFF
NTS

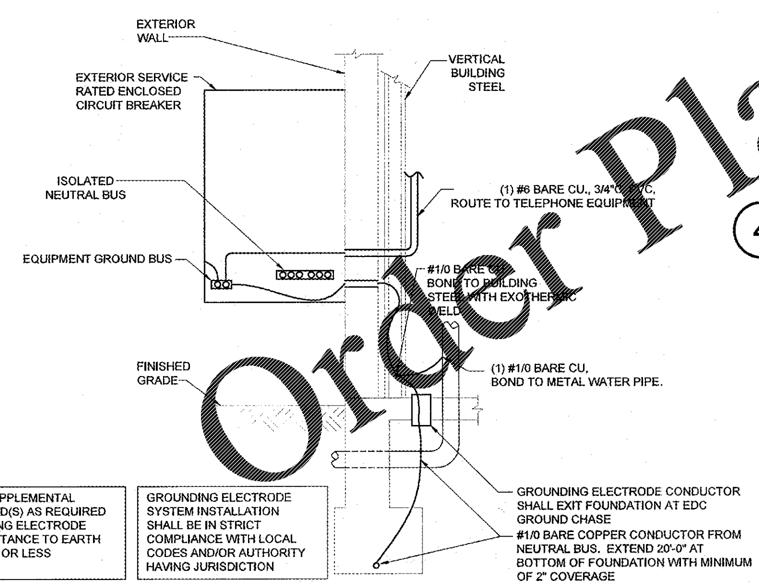

PROVIDE SUPPLEMENTAL GROUND ROD(S) AS REQUIRED IF GROUNDING ELECTRODE HAS A RESISTANCE TO EARTH OF 25 OHMS OR LESS

GROUNDING ELECTRODE SYSTEM INSTALLATION SHALL BE IN STRICT COMPLIANCE WITH LOCAL CODES AND/OR AUTHORITY HAVING JURISDICTION

3 GROUNDING ELECTRODE SYSTEM
N.T.S.

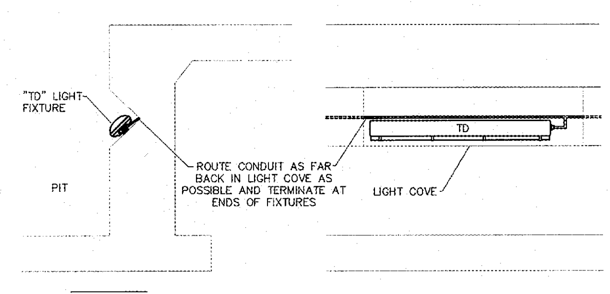

2 PIT LIGHT MOUNTING DETAIL
NTS

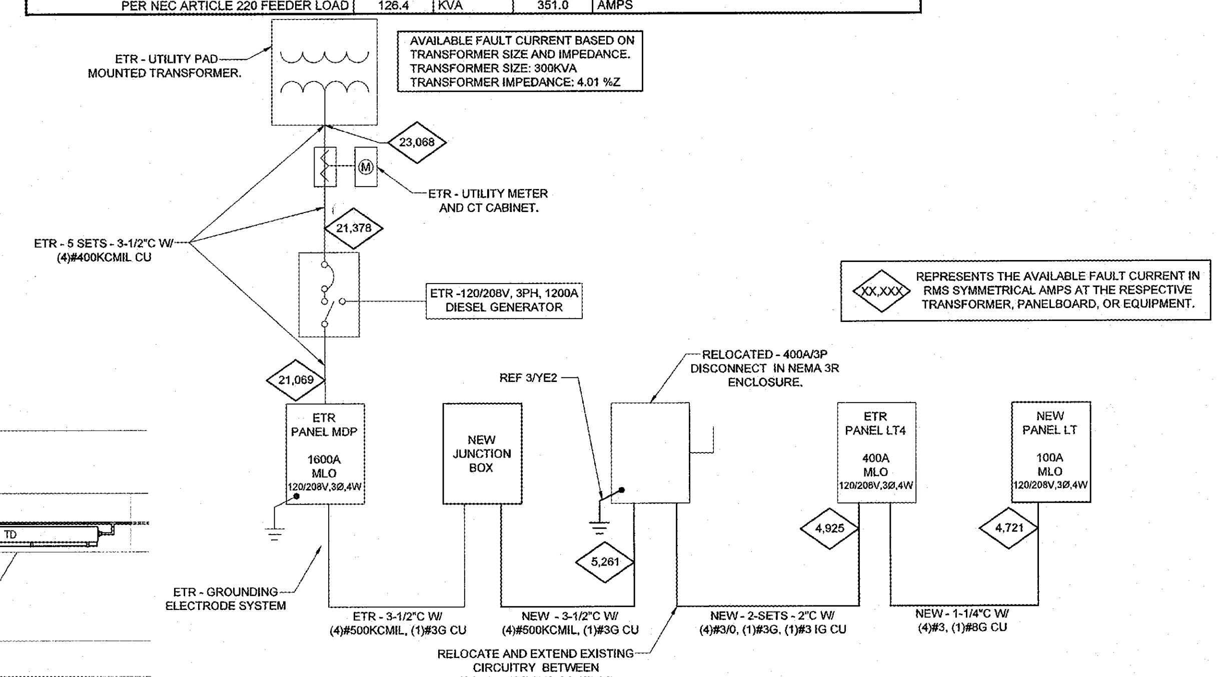

XX,XXX — REPRESENTS THE AVAILABLE FAULT CURRENT IN RMS SYMMETRICAL AMPS AT THE RESPECTIVE TRANSFORMER, PANELBOARD, OR EQUIPMENT.

1 PARTIAL ONE-LINE DIAGRAM
NTS

EACH SUBCONTRACTOR IS RESPONSIBLE FOR HAVING A THOROUGH KNOWLEDGE OF ALL DRAWINGS AND SPECIFICATIONS IN THEIR RELATED FIELD. THE FAILURE TO ACQUAINT HIMSELF WITH THIS KNOWLEDGE DOES NOT RELIEVE THE RESPONSIBILITY OF PERFORMING HIS WORK PROPERLY. NO ADDITIONAL COMPENSATION SHALL BE ALLOWED BECAUSE OF CONDITIONS THAT OCCUR DUE TO FAILURE TO FAMILIARIZE WORKERS WITH THIS KNOWLEDGE.

HFA ARCHITECTS ENGINEERS INTERIORS
HARRISON FRENCH & ASSOCIATES, LTD
1705 S. Walton Blvd., Suite 3
Bentonville, Arkansas 72712
t 479.273.7780
f 888.520.9685
www.hfa-ae.com

STIPULATION FOR REUSE
THIS DRAWING WAS PREPARED FOR USE ON A SPECIFIC SITE AT FORT PIERCE, FL CONTEMPORANEOUSLY WITH ITS ISSUE DATE ON 05/14/19, AND IT IS NOT SUITABLE FOR USE ON A DIFFERENT PROJECT SITE OR AT A LATER TIME. USE OF THIS DRAWING FOR REFERENCE OR EXAMPLE ON ANOTHER PROJECT REQUIRES THE SERVICES OF PROPERLY LICENSED ARCHITECTS AND ENGINEERS. REPRODUCTION OF THIS DRAWING FOR REUSE ON ANOTHER PROJECT IS NOT AUTHORIZED AND MAY BE CONTRARY TO THE LAW.

200 S KINGS HWY
FORT PIERCE, FL 34945

SPEEDCO REBRANDING & LIGHT MECHANICAL ADDITION
PROJECT NUMBER: 03-19-60467

Love's Travel Stop & Country Stores

NATHAN CONNORS LICENSE No 81168 STATE OF FLORIDA PROFESSIONAL ENGINEER
MAY 14 2019

Nathan Connors, P.E.
License #81168
Harrison French & Associates, LTD
COA #26421

ISSUE BLOCK

STORE NO.		467
DOCUMENT DATE:		05/14/19
CHECKED BY:		NKC
DRAWN BY:		CAR
PROTO CYCLE:		

SCHEDULES & NOTES

SHEET: YE2

May14,2019-1:04pm - User chris.richardson
M:\03\03-19-60467 Loves - Ft. Pierce, FL 467\CONDOCS\MEP\ 405 YE2 467.dwg

Order Plans @ WWW.LDIline.com