Order Plans @ WWW.LDILine.com

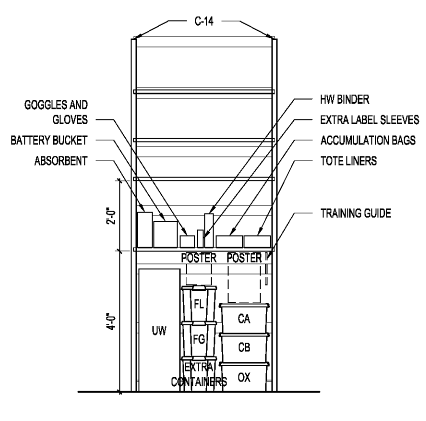

11 C-14 DETAIL

SCALE N.T.S.

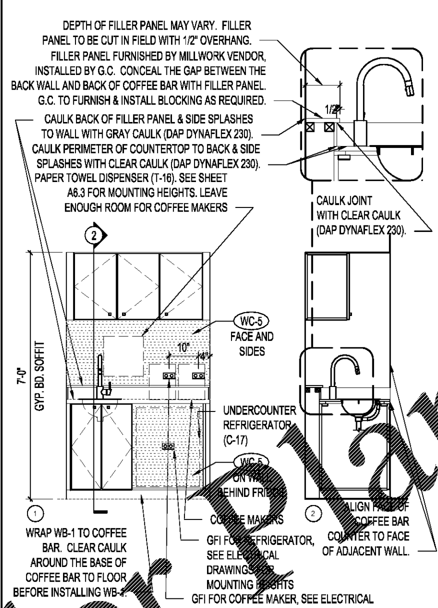

10 M-205 DETAIL

SCALE 1/2"=1'-0"

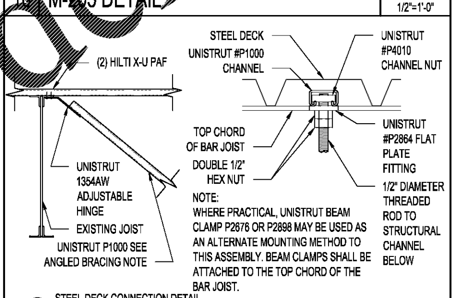

ANGLED BRACING NOTE:
USE P100 FOR BRACING FOR STRUCTURE HEIGHT UP TO 14'-0"
USE P500 FOR BRACING FOR STRUCTURE HEIGHT UP TO 16'-0"
USE STEEL ANGLE (L2x2x1/4) FOR STRUCTURE HEIGHT ABOVE 16'-0"

9 IT CABINET CONNECTION DETAILS

SCALE N.T.S

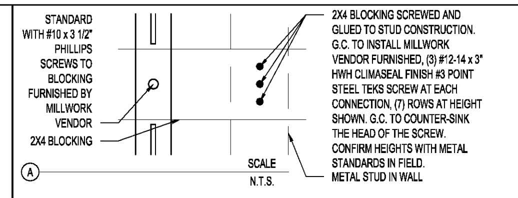

SHELVES AND STANDARDS TO BE FURNISHED BY MILLWORK VENDOR AND INSTALLED BY THE G.C.

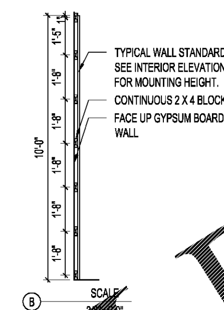

INSTALLATION NOTES:
- CONTINUOUS 2x4 BLOCKING TO BE SECURELY ATTACHED TO WALL AT STUD LOCATIONS.
- MOUNTING HEIGHTS FOR 2x4 BLOCKING TO CORRESPOND TO SCREW HOLES IN WALL STANDARDS.
- SCREW HOLE DIMENSIONS SHOWN ARE FROM THE TOP OF THE STANDARD. SCREW HOLES ARE TO LINE UP WITH THE CENTER OF THE 2x4 BLOCKING EXCEPT AT THE BASE. BOTTOM OF STANDARD AT BASE MUST SIT ON FLOOR.
- SCREW HOLES MUST ALIGN HORIZONTALLY. THE BOTTOM OF THE STANDARDS MAY NEED TO BE CUT TO HAVE THE SCREW HOLES ALIGN AND TO ACCOMMODATE ANY SLOPE OF THE FLOOR.
- STANDARD INSTALLATION SHALL START AT THE HIGH POINT OF THE FLOOR.
-COORDINATE BLOCKING LOCATIONS WITH WALL STANDARDS RECEIVED FROM OWNER.
-USE #10 PHILLIPS FLATHEAD WOOD SCREWS 3"-3 1/2" MINIMUM.

7 STAGING BLOCKING DETAIL

SCALE 1/2"=1'-0"

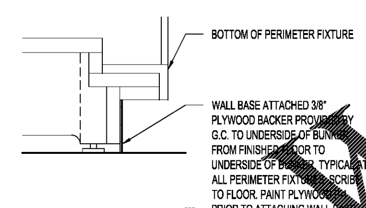

8 PERIMETER FIXTURE BASE DETAIL

SCALE 3"=1'-0"

NOTE:
ARDEX VR98 MOISTURE VAPOR RETARDER MAY BE USED AS AN ALTERNATE TO MC RAPID MOISTURE RESISTANT BARRIER.

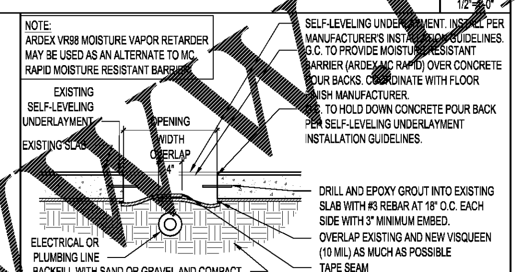

1. NEW CONCRETE IN-FILL MUST HELD DOWN AS REQUIRED TO PROVIDE SELF-LEVELING UNDERLAYMENT TO MATCH THE LANDLORD PROVIDED LEVELING SPEC. SELF-LEVELING UNDERLAYMENT MUST BE LEVEL WITH EXISTING SLAB, SMOOTH, AND READY TO ACCEPT TENANT FINISHES.
2. REFER TO SHEET CS3.0 FOR MOISTURE VENDOR CONTACT INFORMATION.
3. G.C. TO MAINTAIN ALL ARDEX WARRANTIES FOR ALL INSTALLED PRODUCTS. COORDINATE INSTALLATION OF ALL PRODUCTS WITH ARDEX.

6 SLAB ON GRADE TRENCH DETAIL

SCALE 1"=1'-0"

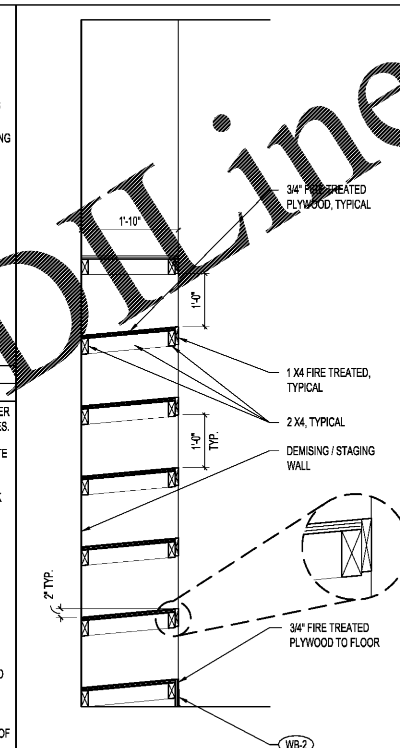

4 SHELF STORAGE SECTION

SCALE 3/4"=1'-0"

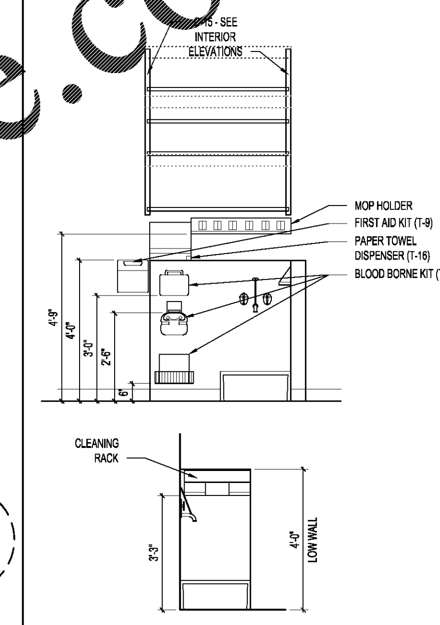

NOTE:
1. ALL MOP SINK ACCESSORIES ARE TO BE FURNISHED BY ULTA AND INSTALLED BY G.C.
2. ULTA IS TO FURNISH (2) MOP HOLDERS. G.C. TO COORDINATE FINAL LOCATION OF THE 2ND MOP HOLDER WITH STORE SET TEAM.
3. G.C. TO FURNISH AND INSTALL 4 FT. HOSE TO CONNECT TO THE MOP SINK FAUCET.

2 MOP SINK ACCESSORIES

SCALE 1/2"=1'-0"

IT CABINET WEIGHT: 475 LBS.

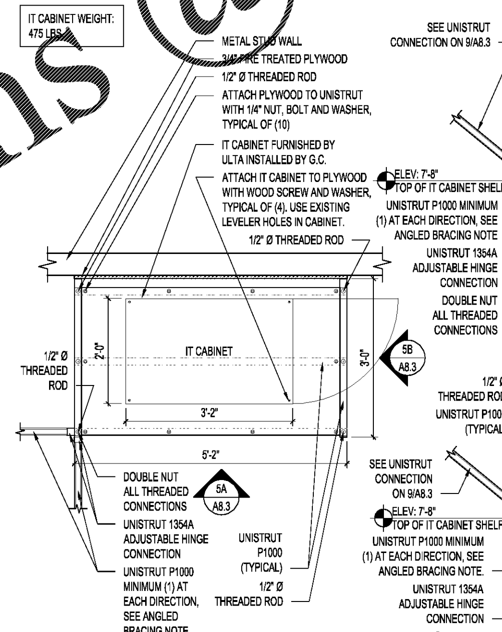

ANGLED BRACING NOTE:
USE P100 FOR BRACING FOR STRUCTURE HEIGHT UP TO 14'-0"
USE P500 FOR BRACING FOR STRUCTURE HEIGHT UP TO 16'-0"
USE STEEL ANGLE (L2x2x1/4) FOR STRUCTURE HEIGHT ABOVE 16'-0"

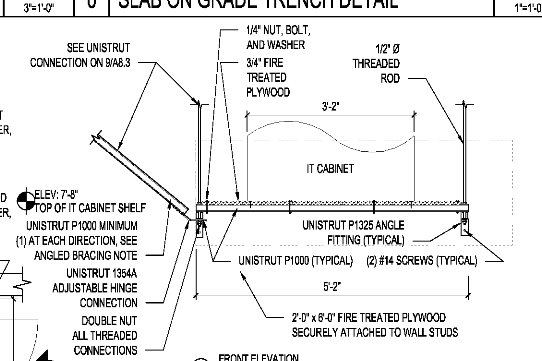

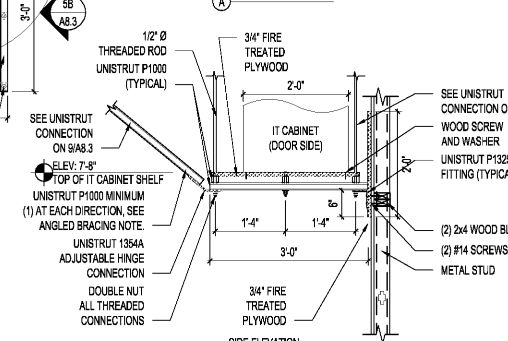

5 IT CABINET SHELF DETAIL - STRUCTURAL

SCALE 3/4"=1'-0"

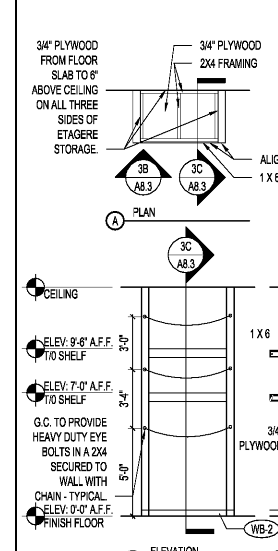

NOTE:
ALL SURFACES TO BE PAINTED P-1. REFER TO FINISH SPECIFICATIONS.

BLOCKING NOTES:
1. ALL IN WALL BLOCKING BY T.G.C.
2. PLYWOOD BLOCKING IN WALL BETWEEN STUDS FOR ANCHORING.
3. ALL PLYWOOD, WOOD FRAMING, AND BLOCKING TO BE FIRE RETARDANT TREATED (AS REQUIRED BY CODE).

3 ETAGERE SHELF DETAILS

SCALE 1/4"=1'-0"

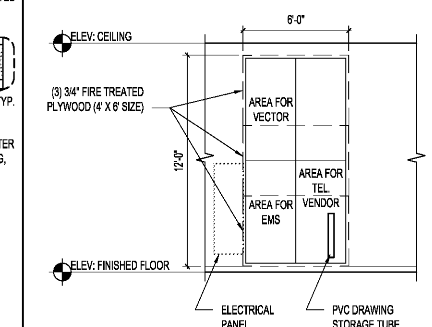

1 TYPICAL EMS/PHONE BOARD LAYOUT

SCALE 1/4"=1'-0"

RGLA
rgla solutions, inc.
5100 River Road, Ste 125
Schiller Park, IL 60176
p: 847.671.7452
f: 847.671.4200
www.rgla.com

REVISIONS:	DATE:
LL & ULTA REVIEW	06/03/2019
BID ISSUE	06/03/2019
PERMIT ISSUE	06/04/2019

robert g. lyon + associates, inc.
retail architecture
5100 River Road, Ste 125
Schiller Park, IL 60176
p: 847.671.7452
f: 847.671.4200
www.rgla.com

SEAL:

THE ABOVE DRAWINGS AND SPECIFICATIONS AND IDEAS, DESIGNS AND ARRANGEMENTS REPRESENTED THEREBY ARE AND SHALL REMAIN THE PROPERTY OF THIS OFFICE AND NO PART THEREOF SHALL BE COPIED, DISCLOSED TO OTHERS OR USED IN THE CONNECTION WITH ANY WORK OR PROJECT OTHER THAN THE SPECIFIC PROJECT FOR WHICH THEY HAVE BEEN PREPARED AND DEVELOPED WITHOUT THE WRITTEN CONSENT OF THIS OFFICE. VISUAL CONTACT WITH THESE DRAWINGS OR SPECIFICATIONS SHALL CONSTITUTE CONCLUSIVE EVIDENCE OF ACCEPTANCE OF THESE RESTRICTIONS.

WRITTEN DIMENSIONS ON THESE DRAWINGS SHALL HAVE PRECEDENCE OVER SCALED DIMENSIONS: CONTRACTORS SHALL VERIFY AND BE RESPONSIBLE FOR ALL DIMENSIONS AND CONDITIONS ON THE JOB AND THIS OFFICE MUST BE NOTIFIED OF ANY VARIATIONS FROM THE DIMENSIONS AND CONDITIONS SHOWN BY THESE DRAWINGS. SHOP DETAILS MUST BE SUBMITTED TO THIS OFFICE FOR APPROVAL BEFORE PROCEEDING WITH FABRICATION.

©2018 RGLA SOLUTIONS, INC.
©2018 ROBERT G. LYON & ASSOCIATES, INC.

ULTA BEAUTY

ULTA #1613
SHOPPES OF MADISON
8201 HIGHWAY 72 WEST
SUITE C
MADISON, AL 35758

CONSTRUCTION DETAILS

DRAWN BY	IA
CHECKED BY	PK
JOB NUMBER	19047
SHEET NAME	A8.3