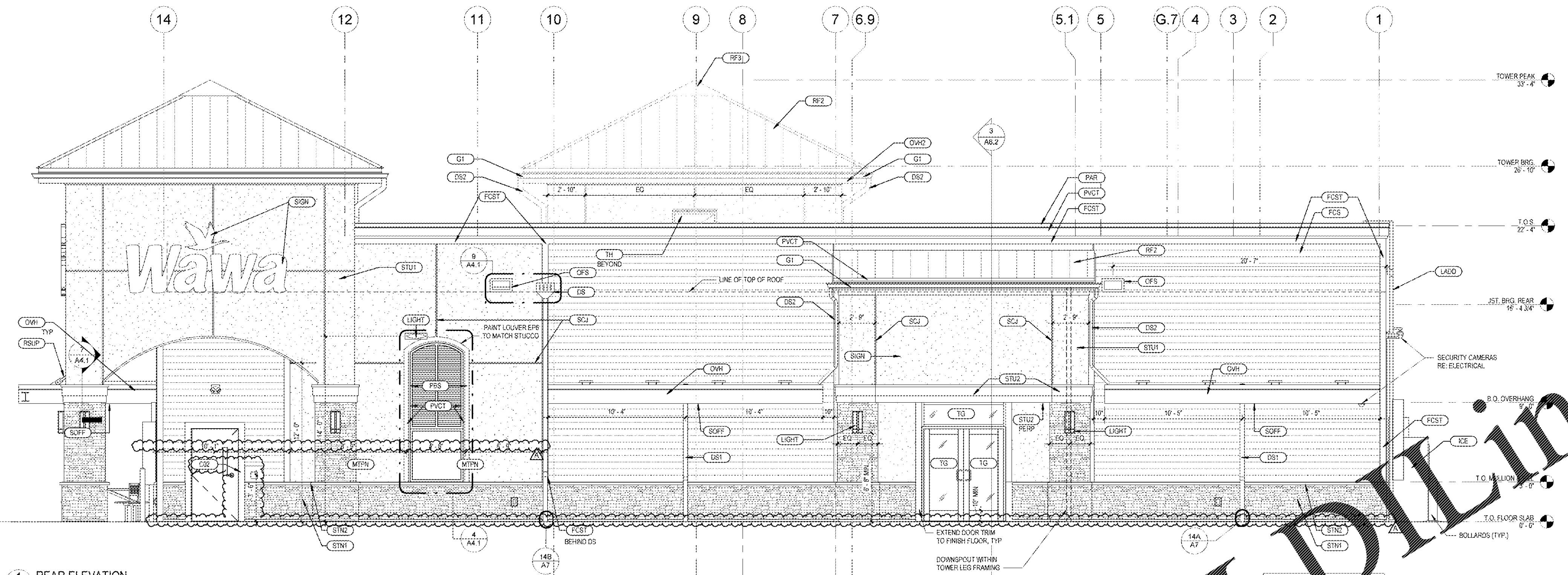

1 REAR ELEVATION
A4.1 1/4" = 1'-0"

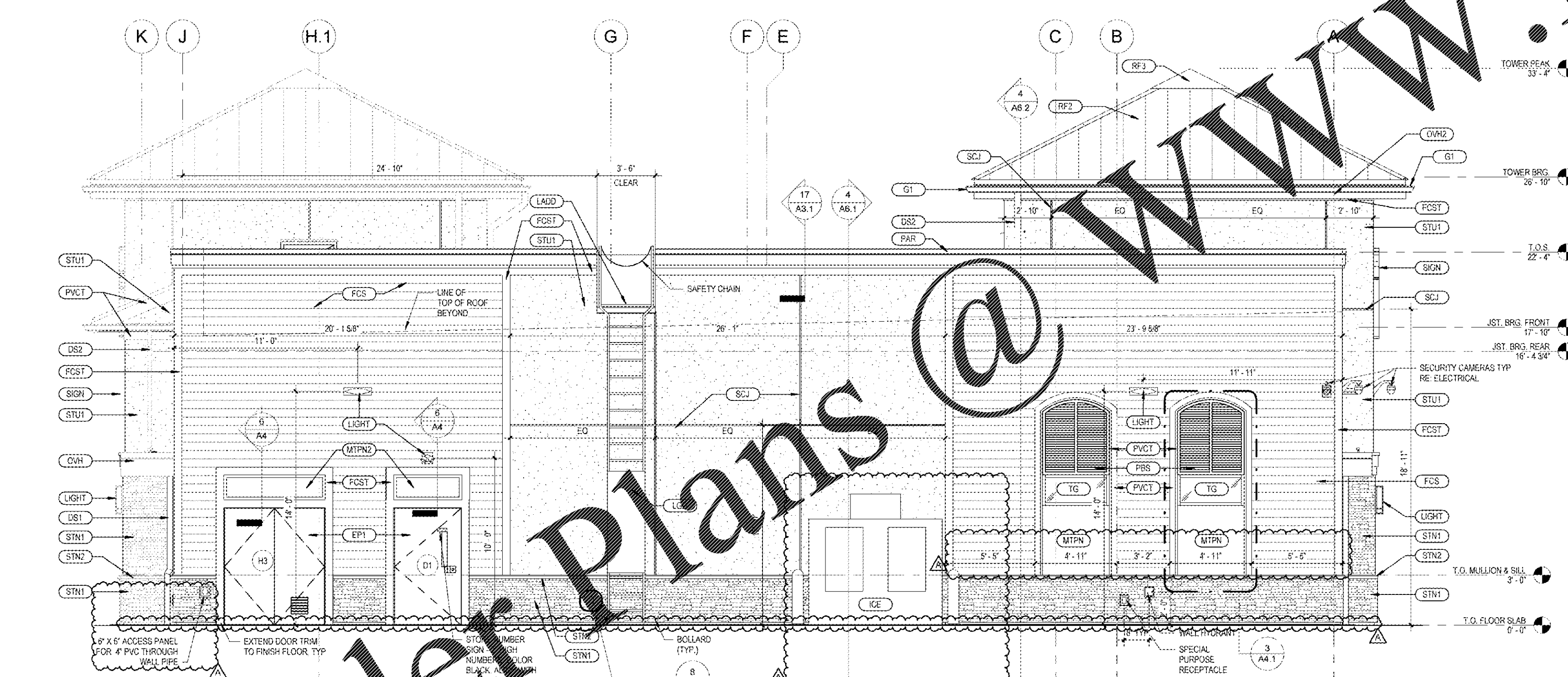

2 LEFT ELEVATION
A4.1 1/4" = 1'-0"

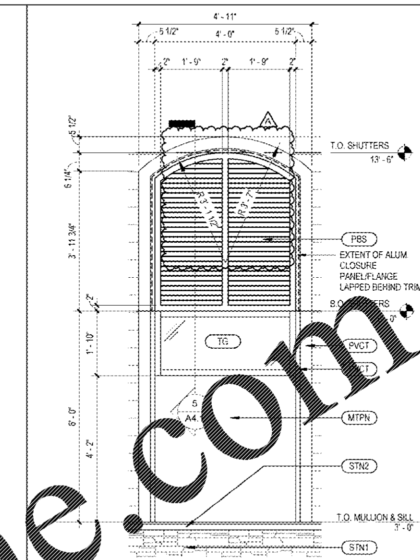

3 BAHAMA SHUTTER DETAIL
A4.1 1/2" = 1'-0"

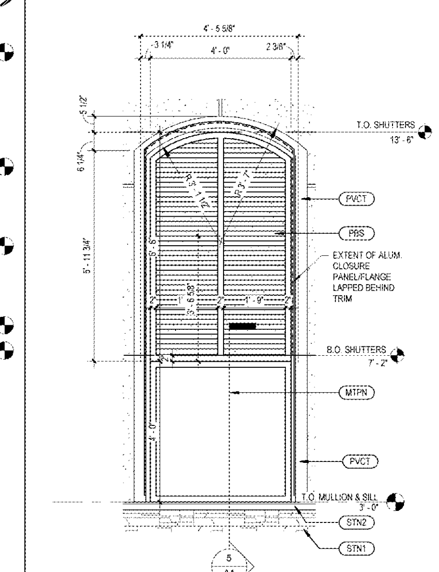

4 BAHAMA SHUTTER DETAIL
A4.1 1/2" = 1'-0"

STOREFRONT WINDOWS
U FACTOR OF 0.27 AND SHGC OF 0.40

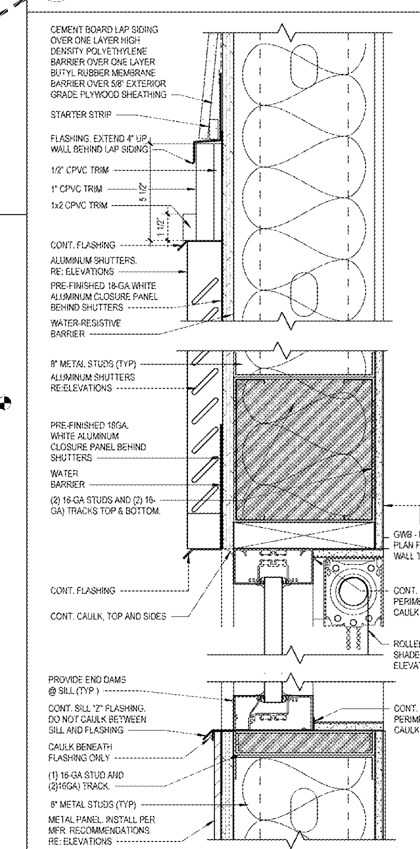

5 EXTERIOR WINDOW SECTION
A4.1 3" = 1'-0"

GENERAL NOTES

1. ALL BLOCKING @ HARDIE FOR LIGHTS, SECURITY ITEMS. SEE DETAIL 18/A7.
2. MOUNT SECURITY CAMERAS THE SAME HEIGHT AS THE EXTERIOR WALL FIXTURE
3. PROVIDE 6" X 8" ELECTRICAL BOX STONE TRIM BY BOULDER CREEK, COLOR ANTIQUE TAN AT ALL EXTERIOR ELECTRICAL RECEPTACLES MOUNTED ON STONE. SEE DETAIL 8/A4.
4. PETERSEN PAC-CLAD IS AN ACCEPTABLE ALTERNATE MFR. FOR PRODUCTS WHERE "ATAS" IS SPECIFIED. PROVIDE EQUAL OR BETTER QUALITY PRODUCTS. SUBMIT PRODUCT DATA TO ARCHITECT FOR APPROVAL.

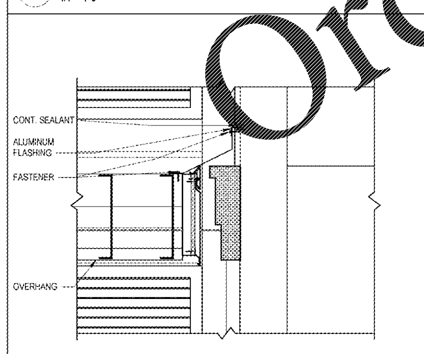

7 CANOPY DETAIL
1" = 1'-0"

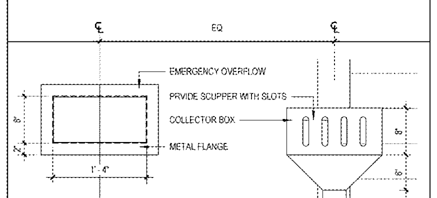

9 SCUPPER AND OVERFLOW DETAIL
A4.1 1" = 1'-0"

ARCHITECTURAL - EXTERIOR FINISH SCHEDULE

SYMBOL	MATERIAL	MANUFACTURER	COLOR	NOTES
C02	C02 FILL BOX WITH PVC SLEEVE THRU WALL	SUPPLIER		SEE A1 FOR LOCATION AND MOUNTING DETAIL. 18/A7 (SIM.)
DS	ALUMINUM THRUWALL SCUPPER & COLLECTOR AND 4" DIA. ALUMINUM DOWNSPOUT	ATAS INTERNATIONAL INC.	POLISHED ALUMINUM W/ CLEAR ANODIZED FINISH	COORDINATE WITH CIVIL FOR CONNECTION TO STORM SEWER. SEE DETAIL 14A & 14B/A7. ALTERNATE : PETERSEN PAC CLAD
DS1	4" DIA. ALUMINUM DOWNSPOUT. REFER TO SPECS FOR GAUGE	ATAS INTERNATIONAL INC.	POLISHED ALUMINUM W/ CLEAR ANODIZED FINISH	COORDINATE WITH CIVIL FOR CONNECTION TO STORM SEWER. SEE DETAIL 14A & 14B/A7. ALTERNATE : PETERSEN PAC CLAD
DS2	4" DIA. ALUMINUM DOWNSPOUT	ATAS INTERNATIONAL INC.	.032 POLISHED ALUMINUM W/ CLEAR ANODIZED FINISH	ALTERNATE : PETERSEN PAC CLAD
EP1	PAINT	BENJAMIN MOORE	COLOR: WHITE DIAMOND 2121-60 FINISH: EGGSHELL	DOOR & FRAME
EP6	PAINT	BENJAMIN MOORE	COLOR: WESTMINSTER GOLD #200, FINISH: SEMI-GLOSS	
FCS	"ARTISAN" PLANK LAP SIDING	JAMES HARDIE	WOODLAND CREAM FINISH: SMOOTH, 8.25" X 12'	PRE-FINSHED. PROVIDE COLOR-MATCHED CAULK BY JAMES HARDIE
FCST	"ARTISAN" ACCENT TRIM	JAMES HARDIE	ARTIC WHITE, FINISH: SMOOTH, 1.5" TH x 6" W x 10'-0" L	PRE-FINSHED. PROVIDE COLOR-MATCHED CAULK BY JAMES HARDIE
G1	ALUMINUM GUTTERS		POLISHED ALUMINUM W/ CLEAR ANODIZED FINISH	CONTINUOUS - NO SEAMS ALLOWED. SEE SHEET A3.1
ICE	ICE MERCHANDISER	LEER	PAINT BENJAMIN MOORE, BM OC-1 NATURAL WICKER	
LADD	METAL EXTERIOR LADDER	EASTERN METAL SUPPLY	BRUSHED ALUMINUM	SEE A3.1 FOR DETAILS
LGD	6' LADDER GUARD #LG6	VISIONMASTERS EQUIP. CO.		
LIGHT	EXTERIOR LIGHT FIXTURE			SEE ELECTRICAL DRAWINGS AND DETAIL 18/A7 FOR MOUNTING
MTPN	METAL PANEL	CFL ARCHITECTURAL, LLC.	COLOR TO MATCH ADJACENT TRIM	BAHAMA SHUTTERS ASSEMBLY. CONTACT (407) 408-3932
MTPN2	METAL PANEL	CFL ARCHITECTURAL, LLC.	PAINT TO MATCH DOORS, EP1	PANEL ABOVE DOOR. CONTACT (407) 408-3932
OFS	ALUMINUM 8" X 16" OVERFLOW SCUPPER	ATAS INTERNATIONAL INC.	POLISHED ALUMINUM W/ CLEAR ANODIZED FINISH	ALTERNATE: PETERSON PAC CLAD
OVH	METAL OVERHANG FACING	ATAS INTERNATIONAL INC.	RAPID-LOK FASCIA & RAPID-LOK COPING. COLOR: #17 BRITE RED	SEE A3.1 FOR DETAILS. ALTERNATE : PETERSON PAC CLAD
OVH2	HIP ROOF FASCIA	ATAS INTERNATIONAL INC.	BRAKE METAL, COLOR #26 BONE WHITE	SEE A3.1 FOR DETAILS. ALTERNATE : PETERSON PAC CLAD
PAR	ALUMINUM PARAPET CAP	ATAS INTERNATIONAL INC.	COLOR TO MATCH ADJACENT TRIM	ALTERNATE : PETERSEN PAC CLAD

ARCHITECTURAL - EXTERIOR FINISH SCHEDULE

SYMBOL	MATERIAL	MANUFACTURER	COLOR	NOTES
PBS	PREFINISHED ALUMINUM BAHAMA SHUTTER	FENWALL FABRICATION & MFG.	COLOR TO MATCH ADJACENT TRIM	SHUTTER PER SPECS. CONTACT: KERRI BEALS 813.343.5979, ALTERNATE: SUPERIOR CUSTOM SHUTTERS, CONTACT DAVID DANIELS 407.949.1969
PVCT	ACCENT TRIM	AZEK	WHITE. FINISH: SMOOTH; SEE DRAWINGS FOR DIMENSIONS	PRE-FINISHED. ALTERNATE : FAUGHT
RF2	METAL ROOFING	PETERSEN ALUMINUM CORP.	COPPER PENNY	SNAP CLAD 0.032" (MIN.) X 18" WIDE ALUMINUM PANEL
RF3	STANDING SEAM ROOF HIP CAP	PETERSEN ALUMINUM CORP.	COPPER PENNY	SNAP CLAD 0.032" (MIN.) X 18" WIDE ALUMINUM PANEL
RSUP	ROD SUPPORT & PLATE		POWDER COAT, MATCH SW #6076	SEE STRUCTURAL. ALL RODS NOT INDICATED ON STRUCTURAL ARE PURELY DECORATIVE RE: 21/A3.1
SCJ	STUCCO CONTROL JOINT - 3/4" WIDE			"W' SHAPED ACCORDION STYLE RE SPECS
SIGN	ILLUMINATED SIGNAGE			SIGN BY WAWA, SURFACE MOUNTED
SOFF	MPS120, SOLID AND VENTED	ATAS INTERNATIONAL INC.	BONE WHITE	BUILDING OVERHANGS. ALTERNATE : PETERSEN PAC-CLAD
SPAN	SPANDREL GLASS. 1" INSULATED TEMPERED	VERICON	SUBDUED BRONZE	FRIT TO BE ON INSIDE OF PANEL
STN1	MANUFACTURED STONE VENEER	BORAL	SOUTHWEST BLEND PE-8019, PRO-FIT LEDGESTONE	
STN2	PRE-CAST MANUFACTURED STONE WATERTABLE/SILL	BORAL	TAUPE CSV-1375	VERTICAL GROUT JOINTS: 3/16" MAX. WIDTH. GROUT WITH BONSAL #71 WARM IVORY
STN6	PRE-CAST STONE CAP	ITALIAN CAST STONE	COLOR: WHITE	SEE SHEET A10. GROUT JOINTS 3/16" MAX. WIDTH. COLOR: WHITE (TO MATCH STONE CAP)
STOR	STOREFRONT SYSTEM	KAWNEER	CLEAR ANODIZED	SEE SPECIFICATIONS
STU1	STUCCO	SENERGY	#3085 MERINGUE, FINISH: SAHARA	
STU2	STUCCO	SENERGY	#354 STARK WHITE, FINISH: FINE	
TG	1" INSULATED TEMPERED GLASS			SEE SPECIFICATIONS
TGT	1" INSULATED TEMPERED GLASS	VITRO ARCHITECTURE GLASS	GRAYLITE II. SEE SPECS	SEE SPECIFICATIONS
TH	36" X 48" ACCESS HATCH		FACTORY FINISH	REFER TO DOOR SCHEDULE, SHEET A1

Cuhaci & Peterson
Architects Engineers Planners
1925 Prospect Ave.
Orlando, FL 32814
P (407) 661-9100
F (407) 661-9101
www.c-p.com

CLIENT NAME
WAWA
260 WEST BALTIMORE PIKE
WAWA, PENNSYLVANIA 19063

PROJECT NAME
WAWA F85FB 2019.01 STORE #5357-DOR
NW 87TH AVE. & NW 33RD ST.
DORAL, FLORIDA

SHEET TITLE
EXTERIOR ELEVATIONS

Revision Schedule

No.	Description	Date
	PERMIT SET	08/03/2018
1	PERMIT COMMENTS	10/31/2018
	PRE-BID REVIEW SET	04/17/2019
A	REV 2019.01	05/09/2019
	BID SET	05/09/2019

PROJECT NO.	2171008
DATE	08-03-2018
DRAWN	AA
CHECKED	DU

A4.1

Order Plans @ WWW.LDIILine.com