Catalog #: MRM LED 18L SIL FT UNV DIM 50 80CRI BRZ IL | Project: O'Reilly Auto Parts
Prepared By: Graybar | Date: 6/24/2019

Mirada Medium - MRM
Outdoor LED Area Light

The Mirada's sleek design makes it perfectly-suited for architectural & commercial applications, while its cost-effective die-cast aluminum housing makes its acquisition cost very competitive. The Mirada offers high performance factory-rotatable silicone optics, 5 standard CCTs, 42,000+ delivered lumens, and is available with integral AirLink™ Wireless Controls

IP66 RoHS ARRA cULus LISTED USA

Features & Specifications

Optical System

- State-of-the-Art one piece silicone optic sheet delivers industry leading optical control with an integrated gasket to provide IP66 rated sealed optical chamber in 1 component.
- Proprietary silicone refractor optics provide exceptional coverage and uniformity in IES Types 2, 3, 5W, FT and FTA.
- Silicone optical material does not yellow or crack with age and provides a typical light transmittance of 95%.
- Zero uplight.
- Available in 5000K, 4000K, 3000K, and 2700K color temperatures per ANSI C78.377. Also available in Phosphor Converted Amber, consult factory for availability.
- Minimum CRI of 70. Optional 80 CRI available, consult factory for lead time.
- Integral Louver (IL) option available for improved back-light control without sacrificing street side performance. See page 5 for more details.

Electrical

- High-performance driver features over-voltage, under-voltage, short-circuit and over temperature protection.
- 0-10V dimming (10% - 100%) standard.
- Standard Universal Voltage (120-277 Vac) Input 50/60 Hz or optional High Voltage (347-480 Vac).
- L80 Calculated Life: >100k Hours (See Lumen Maintenance on Page 3)
- Total harmonic distortion: <20%
- Operating temperature: -40°C to +50°C (-40°F to +122°F). 42L lumen package rated to +40°C.
- Power factor: >.90
- Input power stays constant over life.
- Field replaceable surge protection device meets a minimum Category C Low operation (per ANSI/IEEE C62.41.2).
- High-efficacy LEDs mounted to metal-core circuit board to maximize heat dissipation
- Terminal block provided accepts up to 10ga wire.
- Components are fully encased in potting material for moisture resistance. Driver complies with FCC standards. Driver and key electronic components can easily be accessed.

Product Dimensions

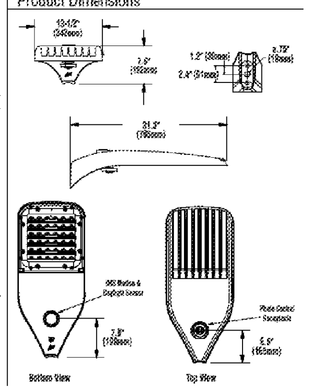

LSI Industries Inc. 10000 Alliance Rd. Cincinnati, OH 45242 • www.lsi-industries.com • (513) 372-3200 • ©LSI Industries Inc. All Rights Reserved.

Mirada Medium - MRM
Outdoor LED Area Light

Features & Specifications (Cont.)

Construction

- Rugged die-cast aluminum housing contains factory prewired driver and optical unit. Cast aluminum wiring access door located underneath.
- Designed to mount to square or round poles.
- Luminaire is proudly manufactured in the U.S. of U.S. and imported parts.
- IP66 rated luminaire protects integral components from harsh environments.
- 3G rated for ANSI C136.31 high vibration applications.
- Fixtures are finished with LSI's DuraGrip® polyester powder coat finishing process. The DuraGrip finish withstands extreme weather changes without cracking or peeling. Other standard LSI finishes available. Consult factory.
- Shipping weight: 30 lbs in carton.

Controls

Wireless Controls System

To make this fixture Airlink ready, simply order one of the following options:

a. The integrated Wireless Lighting Controller: ALSC or ALSCH (see ordering guide) as the controls option, or

b. Integrated Wireless Controller option (above) with integrated motion sensor: ALSCS (ordering guide for mounting heights) or

c. The 7-Pin Photoelectric Control Receptacle: CR7P as the controls option, and either the 5-Pin or 7-Pin Twist Lock Controller: ALSC UNV TL5 or ALSC UNV TL7 as an accessory

To see how the components of AirLink system work together, reference the diagram in the controls section of this specsheet. For more information on our AirLink products, visit our website: www.lsi-airlink.com/airlink-outdoor/

Stand-Alone Controls

- The integral passive infrared motion sensor (IMS) activates switching of luminaire light levels (see the controls section for more details).
- The 7-pin ANSI C136.41-2013 photocontrol receptacle option (CR7P) is available for twist lock photocontrols or wireless control modules.
- The Button Type Photocells (PC) are capable of switching luminaires ON/OFF in response to the amount of available daylight.

Installation

- A single fastener secures the hinged door, underneath the housing and provides quick & easy access to the electrical compartment for installing/servicing.
- Included terminal block provides quick and easy on-site wiring.
- Utilizes LSI's traditional 3" drill pattern for easy fastening of LSI products. (See drawing on page 1)

Warranty

- LSI LED Fixtures carry a 5-year warranty.

Listings

- Listed to UL 1598 and UL 8750.
- RoHS Compliant.
- American Recovery and Reinvestment Act Funding Compliant.
- IDA compliant, with 3000K color temperature selection.
- Title 24 Compliant; see local ordinance for qualification information.
- Suitable For wet Locations.
- IP66 rated Luminaire, IP66 rated optical chamber.
- 3G rated for ANSI C136.31 high vibration applications

Performance

ELECTRICAL DATA (AMPS)*

Lumens	Watts	120V	208V	240V	277V	347V	480V
[illegible]	[illegible]	[illegible]	[illegible]	[illegible]	[illegible]	[illegible]	[illegible]

*Electrical data at 25C (77F). Actual wattage may differ by +/-10%.

ELECTRICAL DATA - PHOSPHOR CONVERTED AMBER (AMPS)*

Lumens	Watts	120V	208V	240V	277V	347V	480V
[illegible]	[illegible]	[illegible]	[illegible]	[illegible]	[illegible]	[illegible]	[illegible]

*Electrical data at 25C (77F). Actual wattage may differ by +/-10%.

RECOMMENDED LUMEN MAINTENANCE (24-42L)

Ambient	Initial	25 hr	50 hr	75 hr	100 hr
[illegible]	100%	[illegible]	[illegible]	[illegible]	[illegible]

RECOMMENDED LUMEN MAINTENANCE (7-18L)

Ambient	Initial	25 hr	50 hr	75 hr	100 hr
[illegible]	100%	[illegible]	[illegible]	[illegible]	[illegible]

DELIVERED LUMENS*

Lumen Package	Distribution	Phosphor Converted Amber: Delivered Lumens	Efficacy	BUG Rating	Wattage
[illegible]	[illegible]	[illegible]	[illegible]	[illegible]	[illegible]

*LED Chips are frequently updated therefore values are nominal.

LUMINAIRE EPA CHART

Single	[illegible]
D180°	[illegible]
D90°	[illegible]
T90°	[illegible]
TN120°	[illegible]
Q90°	[illegible]

Specifications and dimensions subject to change without notice.
LSI Industries Inc. 10000 Alliance Rd. Cincinnati, OH 45242 • www.lsi-industries.com • (513) 372-3200 • ©LSI Industries Inc. All Rights Reserved.

Mirada Medium - MRM
Outdoor LED Area Light

DELIVERED LUMENS*

Lumen Package	Distribution	CRI	2700K CCT: Delivered Lumens	Efficacy	BUG Rating	3000K CCT: Delivered Lumens	Efficacy	BUG Rating	4000K CCT: Delivered Lumens	Efficacy	BUG Rating	5000K CCT: Delivered Lumens	Efficacy	BUG Rating	Wattage
[illegible]	[illegible]	[illegible]	[illegible]	[illegible]	[illegible]	[illegible]	[illegible]	[illegible]	[illegible]	[illegible]	[illegible]	[illegible]	[illegible]	[illegible]	[illegible]

*LED Chips are frequently updated therefore values are nominal.
LSI Industries Inc. 10000 Alliance Rd. Cincinnati, OH 45242 • www.lsi-industries.com • (513) 372-3200 • ©LSI Industries Inc. All Rights Reserved.

MIRADA WALL SCONCE (XWM)

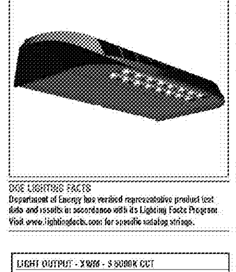

DOE LIGHTING FACTS
Department of Energy has verified representative product test data and results in accordance with its Lighting Facts Program. Visit www.lightingfacts.com for specific catalog strings.

LIGHT OUTPUT - XWM - 3 5000K CCT

	Lumens	Wattage	LPW
03	3410	29	117
04	4417	40	111
06	6609	59	113
08	8610	82	105

LED Chips are frequently updated therefore values may increase.

COVERAGE DIAGRAM

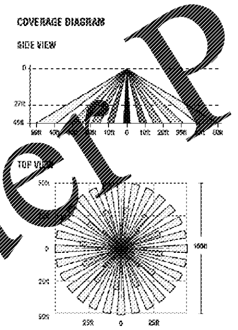

US & Int'l. patents pending

SMARTTEC™ - LSI drivers feature integral sensor which reduces drive current, when ambient temperatures exceed rated temperature.

ENERGY SAVING CONTROL OPTIONS - DIM - 0-10 volt dimming enabled with LSI wireless controls.

OPTIONAL INTEGRAL MOTION SENSOR - Passive infrared motion sensor activates switching of luminaire light levels. High level light is activated when passersby enter target zone and increased to full bright in 1-2 seconds. Low light level (30% of maximum drive current) is activated when target zone is absent of motion activity for 5 minutes and is gradually ramped down (10 seconds) to low level. Sensor detection range 110° horizontal x 93° vertical x 10 meters maximum distance.

LEDS - Available with 5000K, 4000K or 3000K color temperature, 70 CRI min.

OPTICS/DISTRIBUTIONS - Ultra-high efficiency reflectors provide three distributions. Choose from Type 2, Type 3 or Type FT.

HOUSING - Three-piece die-cast aluminum housing is smoothly contoured low-profile shape. Mounting hardware is stainless steel or electro-zinc plated steel. Housing and optical unit are sealed with extruded silicone gasket; supply conductors with molded EPDM bushing.

OPTICAL UNIT - Proprietary silicone refractor optics provide exceptional coverage and uniformity. Pressure stabilizing breather allows square shape protection while preventing cycling from building up internal pressures and vapors that can stress optical unit seals.

WALL MOUNTING - Galvanized-steel universal wall mounting plate easily mounts directly to 4" octagonal or square junction box. EPDM gasket is supplied to be installed between mounting plate and junction box, sealing junction box from entrance of water. Universal plate permits fixture to be mounted in uplighting (indoor only) or downlighting position. Optional pole-mounting bracket permits mounting to standard poles (XPMA).

ELECTRICAL - Two-stage surge protection (including separate surge protection built into electronic driver) meets IEEE C62.41.2-2002, Location Category C. Available with universal voltage power supply 120-277VAC (50/60Hz input) or 347-480VAC.

DRIVER - Drivers are dimmable standard. Components are fully encased in potting material for moisture resistance. Driver complies with IEC and FCC standards. Driver can be easily serviced.

EMERGENCY OPTIONS - Optional integral emergency battery-back-up options are available. BB option operates in 0°C to 60°C ambient temperature and CWBB operates in -20°C to 60°C ambient temperature. When primary AC power failure occurs, both options operate 10 LEDs for minimum of 90 minutes.

OPERATING TEMPERATURE - -40°C to +50°C (-40°F to +122°F)

FINISH - Fixtures are finished with LSI's DuraGrip® polyester powder coat finishing process. The DuraGrip finish withstands extreme weather changes without cracking or peeling.

WARRANTY - LSI LED fixtures carry a limited 5-year warranty.

PHOTOMETRICS - Please visit our web site at www.lsi-industries.com for detailed photometric data.

SHIPPING WEIGHT (in carton) - 30 lbs./13.6Kg

LISTING - UL listed to ANSI/UL1598, UL8750 and other U.S. and international safety standards. Suitable for wet locations in downlight position.

This product, or selected versions of this product, meet the standards listed below. Please consult factory for your specific requirements.

RoHS cULus wet location CE ARRA IP66 FC

Project Name ______ Fixture Type ______
Catalog # ______
10/20/17
© 2017 LSI INDUSTRIES INC.

MIRADA WALL SCONCE (XWM)

LUMINAIRE ORDERING INFORMATION

TYPICAL ORDER EXAMPLE: XWM FT LED 06 50 UE WHT IMS

Prefix	Distribution	Light Source	Output	Color Temperature	Input Voltage	Finish	Optional Controls	Optional Sensor/Options
XWM - Mirada Wall Sconce	2 - Type 2 3 - Type 3 FT - Forward Throw	LED	03L - 3,400 Lumens 04L - 4,400 Lumens 06L - 6,600 Lumens 08L - 8,600 Lumens	50 - 5000K 40 - 4000K 30 - 3000K	UE - Universal Voltage (120-277) HV - 347-480	BLK - Black BRZ - Bronze GPT - Graphite MSV - Metallic Silver PLP - Platinum Plus WHT - White	Wireless Control System: (blank) - None; [illegible] Stand-Alone Control: (blank) - None; DIM - 0-10 volt dimming [illegible]	Sensor: IMS - Integral Motion Sensor Options: BB - Battery Back-up; CWBB - Cold Weather Battery Back-up; XPMA - Pole Mounting Bracket

ACCESSORY ORDERING INFORMATION (Accessories are field installed)

Description	Order Number	Description	Order Number
[illegible]	[illegible]	DFK208 - Double Fusing	[illegible]
FK120 - Single Fusing	FK120	DFK240 - Double Fusing	DFK240
FK277 - Single Fusing	FK277	DFK480 - Double Fusing	DFK480
FK347 - Single Fusing	FK347	[illegible] Remote Configuration Tool	[illegible]

FOOTNOTES:
[illegible]

DIMENSIONS

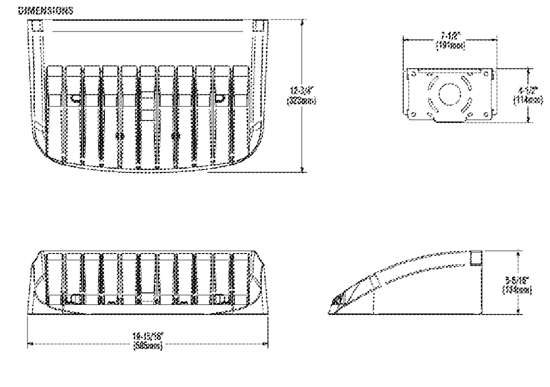

Project Name ______ Fixture Type ______
Catalog # ______
10/20/17
© 2017 LSI INDUSTRIES INC.

Mirada Medium - MRM
Outdoor LED Area Light

Performance (Cont.)

All published luminaire photometric testing performed to IESNA LM-79 standards. ISO footcandle plots below demonstrate the Mirada (MRM) light patterns only. Not for total fixture output. For complete specifications and IES files, see website.

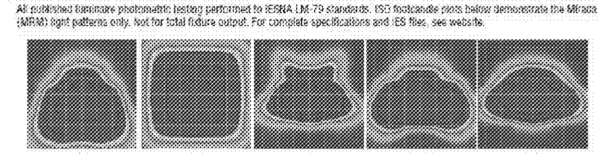

Ordering Guide

TYPICAL ORDER EXAMPLE: MRM LED 36L SIL FTA UNV DIM 50 70CRI ALSCS04 BRZ IL

Luminaire Prefix	Light Source	Lumen Package	Light Output	Distribution	Orientation	Voltage	Driver
MRM - Mirada	LED	7L - 7,000 lms 9L - 9,000 lms 12L - 12,000 lms 18L - 18,000 lms 24L - 24,000 lms 30L - 30,000 lms 36L - 36,000 lms 42L - 42,000 lms *Consult factory for programmable wattages and lumen packages.	SIL - Silicone	2 - Type 2 3 - Type 3 5W - Type 5 Wide FT - Forward Throw FTA - Forward Throw Automotive	(blank) - Standard L - Optics rotated 90° left R - Optics rotated 90° right	UNV - Universal Voltage (120-277V) HV - High Voltage (347-480V)	DIM - 0-10V Dimming

Color Temp	Color Rendering	Controls (Choose One)	Finish	Options
50 - 5,000 CCT 40 - 4,000 CCT 30 - 3,000 CCT 27 - 2,700 CCT AMB - Phosphor Converted Amber	70CRI - 70 CRI 80CRI - 80 CRI	(blank) - None **Wireless Controls System** ALSC - AirLink Synapse Control System ALSCH - AirLink Synapse Control System Host / Satellite ALSCS01 - AirLink Synapse Control System with 8-12' Motion Sensor ALSCHS01 - AirLink Synapse Control System Host / Satellite with 8-12' Motion Sensor ALSCS02 - AirLink Synapse Control System with 12-20' Motion Sensor ALSCHS02 - AirLink Synapse Control System Host / Satellite with 12-20' Motion Sensor ALSCS04 - AirLink Synapse Control System with 20-40' Motion Sensor ALSCHS04 - AirLink Synapse Control System Host / Satellite with 20-40' Motion Sensor **Stand-Alone Controls** EXT - 0-10V Dimming [illegible] IMSBT1 - Integral Motion Sensor 8-12' 120-277V IMSBT2 - Integral Motion Sensor 12-20' 120-277V IMSBT4 - Integral Motion Sensor 20-40' 120-277V IMSBT1HV - Integral Motion Sensor 8-12' 347-480V IMSBT2HV - Integral Motion Sensor 12-20' 347-480V IMSBT4HV - Integral Motion Sensor 20-40' 347-480V CR7P - 7 Pin Control Receptacle ANSI C136.41 **Button Type Photocells** PC120 - 120V PC208-277 - 208-277V PC347 - 347V	BRZ - Bronze BLK - Black GPT - Graphite MSV - Metallic Silver WHT - White PLP - Platinum Plus SVG - Satin Verde Green	(blank) - None IL - Integral Louver [illegible]

LSI Industries Inc. 10000 Alliance Rd. Cincinnati, OH 45242 • www.lsi-industries.com • (513) 372-3200 • ©LSI Industries Inc. All Rights Reserved.

ALABAMA LICENSED No. 38151-E PROFESSIONAL ENGINEER ABBY L. THURMAN
5/10/19

ENGINEER OF RECORD
ABBY L. THURMAN
ENGINEER LICENSE NUMBER
38151-E
SHEETS BEARING THIS SEAL ARE AUTHENTICATED, RESPONSIBILITY FOR ALL OTHER PLANS, SPECIFICATIONS OR INSTRUMENTS ARE DISCLAIMED.

SGE
SMITH-GOTH ENGINEERS, INC.
3855 S. JEFFERSON AVE. SPRINGFIELD, MO 65807
P: 417-882-2200 F: 417-882-1188
WWW.SMITHGOTH.COM

PROJECT:
NEW O'REILLY AUTO PARTS STORE
11178 COUNTY LINE ROAD
MADISON, AL 35758

SITE LIGHTING DETAILS

O'Reilly AUTO PARTS
CORPORATE OFFICES
233 SOUTH PATTERSON
SPRINGFIELD, MISSOURI 65802
(417) 862-2674 TELEPHONE

DRAWN BY: CEV
CHECKED BY: AT/BC
DATE: 05/10/2019
REVISION:
PROJECT NUMBER: 19098-MS3
SHEET NUMBER
SP3

© COPYRIGHT 2018-2019 – DESIGNS, DRAWINGS AND SPECIFICATIONS ARE INSTRUMENTS OF SERVICE AND ARE THE PROPERTY OF THE DESIGN PROFESSIONAL. REPRODUCTION PROHIBITED WITHOUT THE EXPRESSED WRITTEN CONSENT OF THE DESIGN PROFESSIONAL.

Order Plans @ WWW.LDILine.com