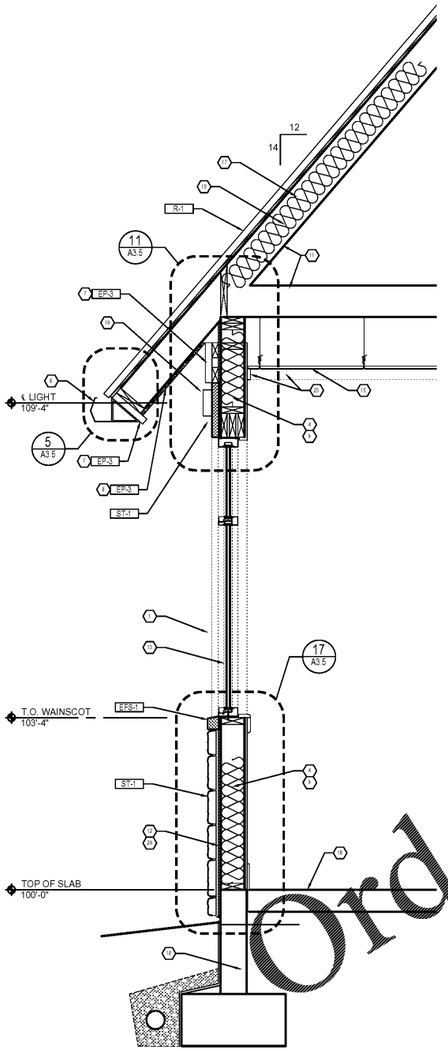

WALL SECTIONS 3/4"=1'-0" 1

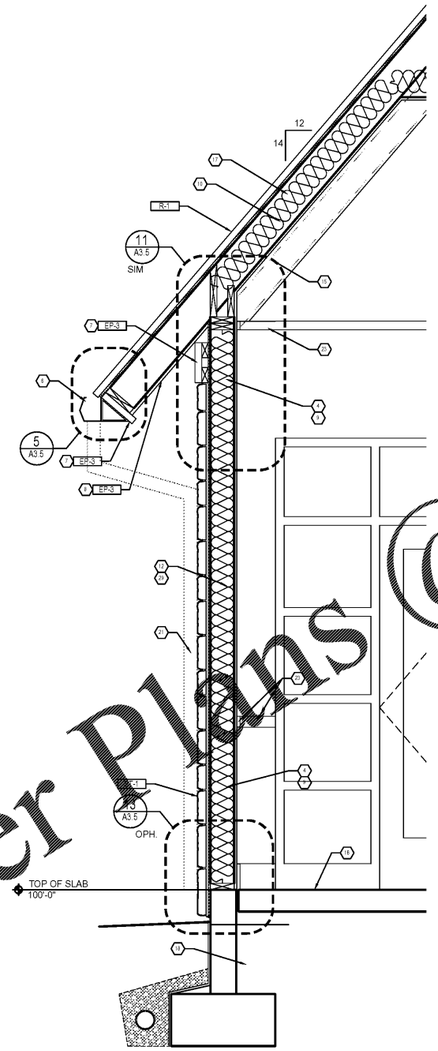

WALL SECTIONS 3/4"=1'-0" 2

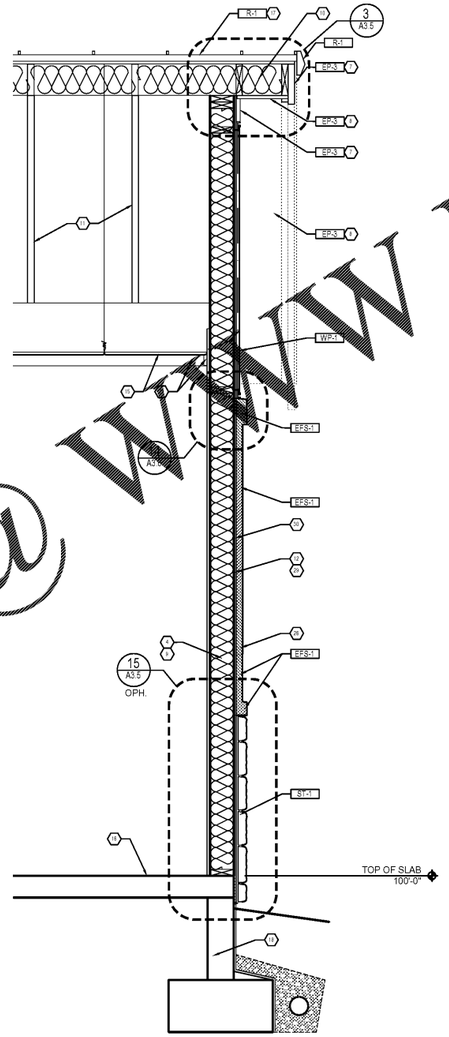

WALL SECTIONS 3/4"=1'-0" 3

NOT USED 3/4"=1'-0" 4

KEY NOTES:

1	STONE VENEER BEYOND
2	METAL CAP FLASHING; RE: 2/A3.6
3	EIFS VENEER
4	2x6 WOOD FRAMING AT 16" O.C.
5	BUILDING SIGNAGE BY SIGN CONTRACTOR
6	METAL GUTTER POWDER COATED TO MATCH R-1
7	CEDAR TRIM
8	TONGUE AND GROOVE POPLAR SOFFIT
9	R-21 BATT INSULATION
10	R-30 BATT INSULATION
11	WOOD JOIST / TRUSS; RE: STRUCTURAL
12	EXTERIOR SHEATHING
13	ALUMINUM STOREFRONT WINDOW
14	DOOR AS SCHEDULED
15	CEILING AS SCHEDULED
16	FLOORING AS SCHEDULED
17	ROOF SHEATHING
18	FOUNDATION; RE: STRUCTURAL
19	LIGHT FIXTURE, RE: ELECTRICAL
20	VINYL AWNING, PROVIDED BY GC. GC TO COORDINATE BLOCKING.
21	METAL GUTTER AND DOWNSPOUT POWDER COATED EP-1
22	R-30 BATT ISO ROOF INSULATION
23	2 1/2"x3/4" POPLAR TRIM
24	WOOD BRACING; RE: STRUCTURAL
25	2'X2' ACCESS PANEL, PAINT TO MATCH ADJACENT FINISH
26	STUCCO VENEER
27	WALK IN COOLER/FREEZER BY KEC.
28	PREFINISHED CANOPY, PROVIDED BY OWNER. G.C. TO COORDINATE BLOCKING.
29	WATERPROOFING MEMBRANE
30	1/4" CHANNEL SCREED, REFER TO 9/A3.5

EXTERIOR PAINT

EP-1	BALANCED BEIGE (LIGHT TAN)
EP-2	SYCAMORE TAN (MEDIUM TAN)
EP-3	FIREWORKS (RED)

EXTERIOR WALL FINISHES

EFS-1	BALANCED BEIGE EIFS
EFS-2	SYCAMORE TAN EIFS
EFS-3	FIREWORKS RED EIFS
ST-1	GOLDEN BUCKEYE CULTURED STONE

ROOFING

R-1	STANDING SEAM METAL ROOFING - AWARD BLUE
R-2	DUROLAST ROOFING
R-3	METAL COPING - DARK BRONZE

MISC. EXTERIOR

WP-1	WOOD PLANK WALL SYSTEM
MT-1	METAL REVEAL (MATCH EP-2)
FC-1	FABRIC AWNING "REGATTA"
ASF-1	ALUMINUM STOREFRONT DK BRONZE
BE-1a	BENCHES

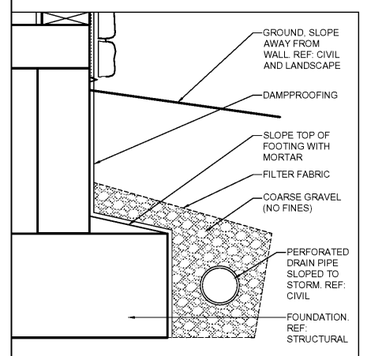

TYPICAL DRAIN PIPE DETAIL 1-1/2"=1'-0" 5

L|P
2138 N Cleveland Massillon Rd
Akron, Ohio 44333
t 330.659.3161
web louisandpartners.com

L|P Architecture

USE OF DOCUMENTS Drawings, specifications and other documents prepared by the Architect are instruments of the Architect's service and are for the use solely with respect to this Project. The Architect shall retain all common law, statutory and other reserved rights, including copyright.

IHOP

05/07/2019

PROJECT NO.:	
DRAWN BY:	L+P
CHECKED BY:	L+P
ISSUED DATE:	05.07.19

ISSUED REVISIONS:

3070 Highland Pte. Dr.
Owensboro, KY 42303

IHOP
Rise and Shine Prototype

Wall Sections

A3.4

Order Plans @ WWW.LDILine.com