RECEIVED
NOV 01 2018
1736 E SUNSHINE ST, SUITE 417
SPRINGFIELD MO

STEEL SQUARE POLES

POLE ORDERING INFORMATION

TYPICAL ORDER EXAMPLE: **5SQB5 S07G 24 S PLP SF DGP**

Pole Series	Material	Height[2]	Mounting Configuration	Pole Finish	Options
Bolt-on Arm Mount - See pole selection guide for patterns and fixture matches. 4SQB3 - 3" Reduced drilling pattern 5SQB3 - 3" Reduced drilling pattern 4SQB5 - 5" Traditional drilling pattern 5SQB5 - 5" Traditional drilling pattern 6SQB5 - 5" Traditional drilling pattern	S11G - 11 Ga. Steel S07G - 07 Ga. Steel	14' 16' 18' 20' 22' 24' 26' 28' 30' 35' 39'	S - Single/Parallel D180° - Double D90° - Double DN90° - Double T90° - Triple TN120° - Triple Q90° - Quad QN90° - Quad	BRZ - Bronze BLK - Black PLP - Platinum Plus WHT - White SVG - Satin Verde Green GPT - Graphite MSV - Metallic Silver	GA - Galvanized Anchor Bolts SF - Single Flood[3] DF - Double Flood[3] DGP - DuraGrip® Plus LAB - Less Anchor Bolts OSXX - Pole preparation for PMOS Occupancy Sensor[4]
Tenon Mount - See pole selection guide for tenon and fixture/bracket matches. 4SQN 5SQN 6SQN	Consult Pole Selection Chart on opposite page		N - Tenon Mount (Standard tenon size is 2-3/8" O.D.)		Standard SF and DF pole preparations are located 3/4 of the height of the pole from the base, unless otherwise specified.
No Mounting Holes - Use with: • BKA 4SF & BKA 5SF • BKA X4SF & BKA X5SF					
Internal Slip-fitter[1] 4SQI 6SQI					

ACCESSORY ORDERING INFORMATION (Accessories are field installed)

Description	Order Number	Description	Order Number
4BC - 4" Square Base Cover	122560CLR	Vibration Damper - 4" Square Pole (bolt-on mount only)	172533
5BC - 5" Square Base Cover	122561CLR	Vibration Damper - 5" Square Pole (bolt-on mount only)	172533
6BC - 6" Square Base Cover	122562CLR	Vibration Damper - 6" Square Pole (bolt-on mount only)	178391
FDR - Weatherproof Duplex Receptacle	122580CLR	PMOS120 - 120V Occupancy Sensor	519339CLR[5]
GFI - Ground Fault Circuit Interrupter	122567CLR	PMOS208/240 - 208, 240V Occupancy Sensor	534239CLR[5]
MHP - Mounting Hole Plugs (4 plugs-for use w/ 5" traditional drill pattern)	133339	PMOS277 - 277V Occupancy Sensor	519329CLR[5]
MHD - Mounting Hole Weatherproof Decal-for use with 3" reduced drill pattern	340180	PMOS480 - 480V Occupancy Sensor	534249CLR[5]

FOOTNOTES:

1 - See Area Lighting Brackets 3" Reduced Drill Pattern and Area Lighting Brackets - Bolt on 5" Traditional Drill Pattern spec sheets for internal Slip-fitter brackets.

2 - Pole heights will have +/- 1/2" tolerance.

3 - See Flood Lighting Brackets section for choice of FBO brackets.

4 - Order PMOS separately. Change "XX" to indicate height and side of pole location for pole preparation. EX. OS18A indicates preparation is to be 18ft. up from pole base on side A. Optimal distance from ground to sensor is 20ft.

5 - OSXX option required. Not for use with Metal Halide fixtures.

BOLT CIRCLE

	B	C	D	J
	4" (102mm) square 10-1/8" (257mm) sq.	5" (127mm) square 10-1/8" (257mm) sq.	5" (127mm) square 10-1/8" (257mm) sq.	6" (152mm) square 12" (305mm) sq.
	11" (279mm) Dia. Bolt Circle	11" (279mm) Dia. Bolt Circle	11" (279mm) Dia. Bolt Circle	12" (305mm) Dia. Bolt Circle
Bolt Circle	Slotted 8"-11" (203mm-279mm)	Slotted 9"-11" (229mm-279mm)	Slotted 9"-11" (229mm-279mm)	Slotted 12" (305mm)
Anchor Bolt Size	3/4" x 30" (19mm x 762mm)	3/4" x 30" (19mm x 762mm)	1" x 36" (25mm x 914mm)	1" x 36" (25mm x 914mm)
Anchor Bolt Projection	3-1/4" (83mm)	3-1/4" (83mm)	4" (102mm)	4" (102mm)
Base Plate Opening for Wireway Entry	3-5/8" (92mm)	4-3/4" (121mm)	4-5/8" (117mm)	5-5/8" (143mm)
Base Plate Dimensions	10-1/8" sq. x 3/4" thk. (257mm x 19mm)	10-1/8" sq. x 3/4" thk. (257mm x 19mm)	10-1/8" sq. x 1" thk. (257mm x 25mm)	12" sq. x 1-1/8" thk. (305mm x 28mm)

Note: Base plate illustrations may change without notice. Do not use for setting anchor bolts. Consult factory for the base plate templates.

Project Name ______ Fixture Type ______
Catalog # ______

11/27/17
© 2017
LSI INDUSTRIES INC.

STEEL SQUARE POLES

DIMENSIONS

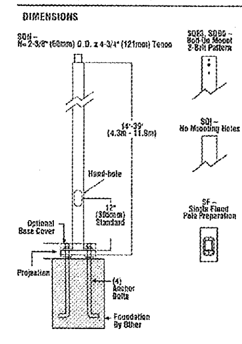

POLE SHAFT - Pole shaft is electro-welded ASTM-A500 Grade C steel tubing with a minimum yield strength of 50,000 psi. On Tenon Mount steel poles, tenon is 2-3/8" O.D. high-strength pipe. Tenon is 4-3/4" in length. Straight poles are 4", 5", and 6" square.

HAND-HOLE - Standard hand-hole location is 12" above pole base. Poles 22' and above have a 3" x 6" reinforced hand-hole. Shorter poles have a 2" x 4" non-reinforced hand-hole.

BASE - Pole base is ASTM-A36 hot-rolled steel plate with a minimum yield strength of 36,000 psi. Two-piece square base cover is optional.

ANCHOR BOLTS - Poles are furnished with anchor bolts featuring zinc-plated double nuts and washers. Galvanized anchor bolts are optional. Anchor bolts conform to ASTM F 1554-07a Grade 55 with a minimum yield strength of 55,000 psi.

GROUND LUG - Ground lug is standard.

DUPLEX RECEPTACLE - Weatherproof duplex receptacle is optional.

GROUND FAULT CIRCUIT INTERRUPTER - Self-testing ground fault circuit interrupter is optional.

FINISHES - Each pole is finished with DuraGrip®, LSI's baked-on polyester-powder finishing process which electrostatically applies and fuses a polyester powder to the pole. Provides an extremely smooth and uniform finish to withstand extreme weather changes without cracking or peeling, and features a five-year limited warranty. Optional DuraGrip® Plus features the added protection of a 3.0 to 5.0 mil thickness of polyester-powder finish plus an inner coating, as well as a seven-year limited warranty.

DETERMINING THE LUMINAIRE/POLE COMBINATION FOR YOUR APPLICATION:

- Select luminaire from luminaire ordering information
- Select bracket configuration if required
- Determine EPA value from luminaire/bracket EPA chart
- Select pole height
- Select MPH to match wind speed in the application area (See windspeed maps).
- Confirm pole EPA equal to or exceeding value from note above
- Consult factory for special wind load requirements and banner brackets

DRILLING LOCATIONS

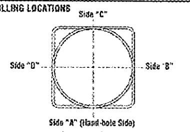

Sides	A	B	C	D
Hand-hole	X			
Single	X			
D180°		X		X
D90°	X			X
T90°	X	X		X
TN120°*	X			
Q90°	X	X	X	X
Single FBO	X			
Double FBO		X		X

*Other two locations will be 120° to the left and right of Side A.

Note: Standard SF and DF pole preparations are located 3/4 of the height of the pole from the base, unless otherwise specified.

SHIPPING WEIGHTS - Steel Square Poles

4"(102mm) sq. 11 Ga. is approximately	7.50 lbs./ft.
4"(102mm) sq. 07 Ga. is approximately	[illegible]
5"(127mm) sq. 11 Ga. is approximately	[illegible]
5"(127mm) sq. 07 Ga. is approximately	[illegible]
6"(152mm) sq. 07 Ga. is approximately	[illegible]
Anchor Bolts (3/4" x 30")(19mm x 762mm)	5 lbs. [illegible]
Anchor Bolts (1" x 36")(25mm x 914mm)	20 lbs. [illegible]

ARRA Funding Compliant

Project Name ______ Fixture Type ______
Catalog # ______

11/27/17
© 2017
LSI INDUSTRIES INC.

Catalog # : Project :
Prepared By : Date :

Mirada Medium - MRM
Outdoor LED Area Light

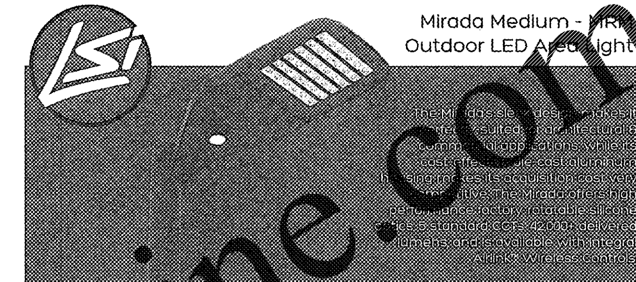

Features & Specifications

Optical System

- State-of-the-Art one piece silicone optic sheet delivers industry leading optical control with an integrated gasket to provide IP66 rated sealed optical chamber in 1 component.
- Proprietary silicone refractor optics provide exceptional coverage and uniformity in IES Types 2, 3, 5W, FT and FTA.
- Silicone optical material does not yellow or crack with age and provides a typical light transmittance of 93%.
- Zero uplight.
- Available in 5000K, 4000K, 3000K, and 2700K color temperatures per ANSI C78.377. Also available in Phosphor Converted Amber, consult factory for availability.
- Minimum CRI of 70. Optional 80 CRI available, consult factory for lead time.
- Integral Louver (IL) option available for improved back-light control without sacrificing street side performance. See page 5 for more details.

Electrical

- High-performance driver features over-voltage, under-voltage, short-circuit and over temperature protection.
- 0-10V dimming (10% - 100%) standard.
- Standard Universal Voltage (120-277 Vac) Input 50/60 Hz or optional High Voltage (347-480 Vac).
- L80 Calculated Life: >100k Hours (See Lumen Maintenance on Page 2)
- Total harmonic distortion: <20%
- Operating temperature: -40°C to +50°C (-40°F to +122°F). 42L lumen package rated to +40°C.
- Power factor: >.90
- Input power stays constant over life.
- Field replaceable surge protection device meets a minimum Category C Low operation (per ANSI/IEEE C62.41.2).
- High-efficacy LEDs mounted to metal-core circuit board to maximize heat dissipation
- Terminal block provided accepts up to 10ga wire.
- Components are fully encased in potting material for moisture resistance. Driver complies with FCC standards. Driver and key electronic components can easily be accessed.

WIRELESS CONTROLS · IP66 · RoHS COMPLIANT · ARRA Funding Compliant · cULus LISTED · USA · TITLE 24 · ida · DLC · DLC PREMIUM

Product Dimensions

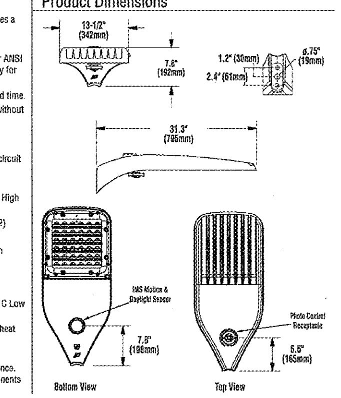

LSI Industries Inc. 10000 Alliance Rd. Cincinnati, OH 45242 • www.lsi-industries.com • (513) 372-3200 • ©LSI Industries Inc. All Rights Reserved.

MIRADA WALL SCONCE (XWM)

LUMINAIRE ORDERING INFORMATION

TYPICAL ORDER EXAMPLE: **XWM FT LED 08L 50 UE WHT IMS**

Prefix	Distribution	Light Source	Output[5]	Color Temperature	Input Voltage	Finish	Optional Controls	Optional Sensor/Options
XWM - Mirada Wall Sconce	2 - Type 2 3 - Type 3 (Wide Throw) FT - Type 4 (Forward Throw)	LED	03L - 3,400 Lumens 04L - 4,400 Lumens 06L - 6,600 Lumens 08L - 8,600 Lumens	50 - 5000K 40 - 4000K 30 - 3000K	UE - Universal Voltage (120-277) HV - 347-480	BLK - Black BRZ - Bronze GPT - Graphite MSV - Metallic Silver PLP - Platinum Plus WHT - White	Wireless Control System[1] (Blank) - None [illegible] - Platinum Control System [illegible] Control System DIM - 0-10 volt dimming (leads to outside fixture) [illegible] Control Stand-Alone Control [illegible] - None [illegible] 0-10 volt dimming[3] (from external signal)	Sensor IMS - Integral Motion Sensor[4] Options EB - Battery Back-up[3] CWBB - Cold Weather Battery Back-up[3] XPMA - Pole Mounting Bracket

ACCESSORY ORDERING INFORMATION (Accessories are field installed)

Description	Order Number	Description	Order Number
XWM SW BLK - Surface Wiring Box [illegible]	3[illegible]	DFK208 - Double Fusing	DFK208
FK120 - Single Fusing	FK120	DFK240 - Double Fusing	DFK240
FK277 - Single Fusing	FK277	DFK480 - Double Fusing	DFK480
FK347 - Single Fusing	FK347	IMS/PC Remote Configuration Tool[7]	684929

FOOTNOTES:

1 - For wireless controls information and specifications, see Controls Section.

2 - Requires a SiteManager [illegible]. Not compatible with [illegible], DIM or HL Option.

3 - Not compatible with IMS Option.

4 - Not compatible with DIM or Wireless Control System.

5 - Not compatible with Wireless Control System.

6 - Not available with EB, CWBB, IMS Option or Wireless Control System.

7 - IMS is the WattStopper Dual Sensor (Daylight & Motion) which is field adjustable via a handheld remote configuration tool.

8 - Output based on type 3 optics in cool white color temperature, see IES files for each individual fixtures.

DIMENSIONS

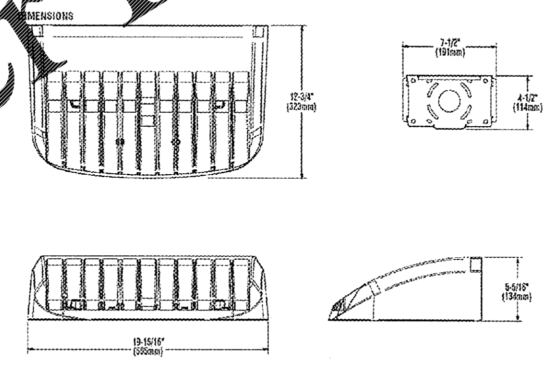

Project Name ______ Fixture Type ______
Catalog # ______

10/20/17
© 2017
LSI INDUSTRIES INC.

MIRADA WALL SCONCE (XWM)

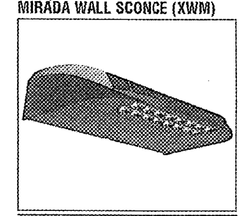

DOE LIGHTING FACTS
Department of Energy has verified representative product test data and results in accordance with its Lighting Facts Program. Visit www.lightingfacts.com for specific catalog strings.

US & Int'l. patents pending

SMARTTEC™ - LSI drivers feature integral sensor which reduces drive current, when ambient temperatures exceed rated temperature

ENERGY SAVING CONTROL OPTIONS - DIM - 0-10 volt dimming enabled with LSI wireless controls.

OPTIONAL INTEGRAL MOTION SENSOR - Passive infrared motion sensor activates switching of luminaire light levels. High level light is activated when passersby enter target zone and increased to full bright in 1-2 seconds. Low light level (30% of maximum drive current) is activated when target zone is absent of motion activity for 5 minutes and is gradually ramped down (10 seconds) to low level. Sensor detection range 110° horizontal x 93° vertical x 10 meters maximum distance.

LEDS - Available with 5000K, 4000K or 3000K color temperature, 70 CRI min.

OPTICS/DISTRIBUTIONS - Ultra-high efficiency reflectors provide three distributions. Choose from Type 2, Type 3 or Type FT.

HOUSING - Three-piece die-cast aluminum housing is smoothly contoured low-profile shape. Mounting hardware is stainless steel or electro-zinc plated steel. Housing and optical unit are sealed with extruded silicone gasket; supply conductors with molded EPDM bushing.

OPTICAL UNIT - Proprietary silicone refractor optics provide exceptional coverage and uniformity. Pressure stabilizing breather allows super-tight protection while preventing cycling from building up internal pressures and vacuums that can stress optical unit seals

WALL MOUNTING - Galvanized-steel universal wall mounting plate easily mounts directly to 4" octagonal or square junction box. EPDM gasket is supplied to be installed between mounting plate and junction box, sealing junction box from entrance of water. Universal plate permits fixture to be mounted in uplighting (indoor only) or downlighting position. Optional pole-mounting bracket permits mounting to standard poles (XPMA).

ELECTRICAL - Two-stage surge protection (including separate surge protection built into electronic driver) meets IEEE C62.41.2-2002, Location Category C. Available with universal voltage power supply 120-277VAC (50/60Hz input) or 347-480VAC.

DRIVER - Drivers are dimming, standard. Components are fully encased in potting material for IP65 moisture resistance. Driver complies with IEC and FCC standards. Driver can be easily accessed.

EMERGENCY OPTIONS - Optional integral emergency battery-back-up options are available. BB option operates in 0°C to 60°C ambient temperature and CWBB operates in -20°C to 60°C ambient temperature. When primary AC power failure occurs, both options operate 10 LEDs for minimum of 90 minutes.

OPERATING TEMPERATURE - -40°C to +50°C (-40°F to +122°F)

FINISH - Fixtures are finished with LSI's DuraGrip® polyester powder coat finishing process. The DuraGrip finish withstands extreme weather changes without cracking or peeling.

WARRANTY - LSI LED fixtures carry a limited 5-year warranty.

PHOTOMETRICS - Please visit our web site at www.lsi-industries.com for detailed photometric data.

SHIPPING WEIGHT (in carton) - 30 lbs./13.6Kg

LISTING - UL listed to ANSI/UL1598, UL8750 and other U.S. and international safety standards. Suitable for wet locations in downlight position.

This product, or selected versions of this product, meet the standards listed below. Please consult factory for your specific requirements.

RoHS · cULus LISTED wet location · CE · ARRA · IP65 · FC

LIGHT OUTPUT - XWM - 3 5000K CCT

	Lumens	Wattage	LPW
03	3410	29	117
04	4417	40	111
06	6609	59	113
08	8610	82	105

LED Chips are frequently updated therefore values may increase.

COVERAGE DIAGRAM

SIDE VIEW

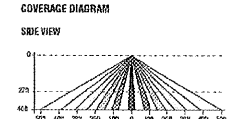

TOP VIEW

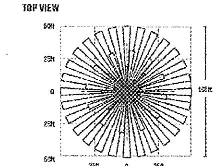

Project Name ______ Fixture Type ______
Catalog # ______

10/20/17
© 2017
LSI INDUSTRIES INC.

Mirada Medium - MRM
Outdoor LED Area Light

Performance (Cont.)

All published luminaire photometric testing performed to IESNA LM-79 standards. ISO footcandle plots below demonstrate the Mirada (MRM) light patterns only. Not for total fixture output. For complete specifications and IES files, see website.

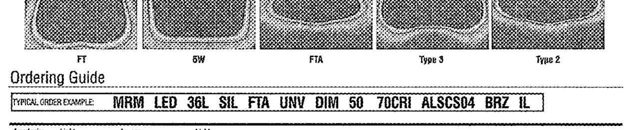

Ordering Guide

TYPICAL ORDER EXAMPLE: **MRM LED 36L SIL FTA UNV DIM 50 70CRI ALSCS04 BRZ IL**

Luminaire Prefix	Light Source	Lumen Package*	Light Output	Distribution	Orientation[1]	Voltage	Driver
MRM Mirada	LED	7L - 7,000 lms 9L - 9,000 lms 12L - 12,000 lms 18L - 18,000 lms 24L - 24,000 lms 30L - 30,000 lms 36L - 36,000 lms 42L - 42,000 lms *Consult factory for programmable wattages and lumen packages	SIL - Silicone	2 - Type 2 3 - Type 3 5W - Type 5 Wide FT - Forward Throw FTA - Forward Throw Automotive	(blank) - standard L - Optics rotated left 90 R - Optics rotated right 90	UNV - Universal Voltage (120-277V) HV - High Voltage (347-480V)	DIM - 0-10V Dimming (0-10%)

Color Temp	Color Rendering	Controls (Choose One)	Finish	Options
50 - 5,000 CCT 40 - 4,000 CCT 30 - 3,000 CCT[2] 27 - 2,700 CCT[2] AMB - Phosphor Converted Amber[2,3]	70CRI - 70 CRI 80CRI - 80 CRI[2]	(Blank) - None **Wireless Controls System** ALSC - AirLink Synapse Control System[4] ALSCH - AirLink Synapse Control System Host / Satellite[4,5] ALSCS01 - AirLink Synapse Control System with 8-12' Motion Sensor[4] ALSCHS01 - AirLink Synapse Control System Host / Satellite with 8-12' Motion Sensor[4,5] ALSCS02 - AirLink Synapse Control System with 12-20' Motion Sensor[4] ALSCHS02 - AirLink Synapse Control System Host / Satellite with 12-20' Motion Sensor[4,5] ALSCS04 - AirLink Synapse Control System with 20-40' Motion Sensor[4] ALSCHS04 - AirLink Synapse Control System Host / Satellite with 20-40' Motion Sensor[4,5] **Stand-Alone Controls** EXT - 0-10v Dimming (from external signal) IMSOM1 - Integral Motion Sensor 8-12' 120-277V[4,6] IMSOM2 - Integral Motion Sensor 12-20' 120-277V[4,6] IMSOM4 - Integral Motion Sensor 20-40' 120-277V[4,6] IMSOM1HV - Integral Motion Sensor 8-12' 347-480V[6,12] IMSOM2HV - Integral Motion Sensor 12-20' 347-480V[6,12] IMSOM4HV - Integral Motion Sensor 20-40' 347-480V[6,12] CR7P - 7 Pin Control Receptacle ANSI C136.41[7] **Button Type Photocells** PCI120 - 120V PCI208-277 - 208-277V PCI347 - 347V	BRZ - Bronze BLK - Black GPT - Graphite MSV - Metallic Silver WHT - White PLP - Platinum Plus SVG - Satin Verde Green	(Blank) - None IL - Integral Louver HSS[3]

LSI Industries Inc. 10000 Alliance Rd. Cincinnati, OH 45242 • www.lsi-industries.com • (513) 372-3200 • ©LSI Industries Inc. All Rights Reserved. 09/13/18

Order Plans @ WWW.LDILine.com

rtm engineering consultants
3333 E. Battlefield Road, Ste. 1000, Springfield, MO 65804
rtmassociates.com | 417.881.0020
state of virginia c.o.a.# 407006841

COMMONWEALTH OF VIRGINIA
JOHN E. ECKHARDT
NO. 04117
PROFESSIONAL ENGINEER
11-1-18

CRAIG A. SCHNEIDER, AIA
ARCHITECT
1736 East Sunshine, Suite 417
Springfield, Missouri 65804
417.862.0558
Fax: 417.862.3265
e-mail: architect@esterlyschneider.com

PROJECT:
NEW O'REILLY AUTO PARTS STORE
OLD FRANKLIN TURNPIKE
ROCKY MOUNT, VA

SITE LIGHTING DETAILS

O'Reilly AUTO PARTS
CORPORATE OFFICES
233 SOUTH PATTERSON
SPRINGFIELD, MISSOURI 65802
(417) 862-2674 TELEPHONE

COMM #	4252
DATE:	11-2-18
REVISION DATE:	

SP2

H:\ORE\0520\D\0520SP2 1 Nov 2018 - 7:02 am