Order Plans @ WWW.LDILine.com

SAFETY FENCE
PLATE 3.1-1

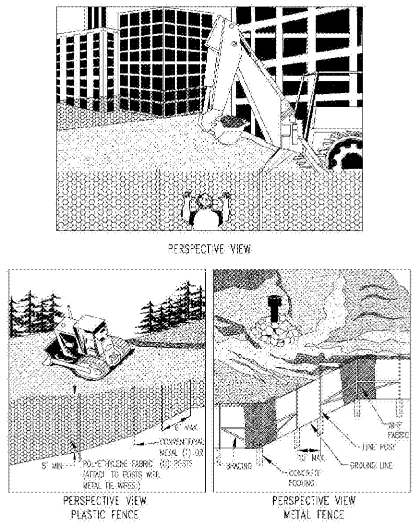

SOURCE: CONWED PLASTICS, VDOT ROAD AND BRIDGE STANDARDS, VA DSWC

STONE CONSTRUCTION ENTRANCE
PLATE 3.02-1

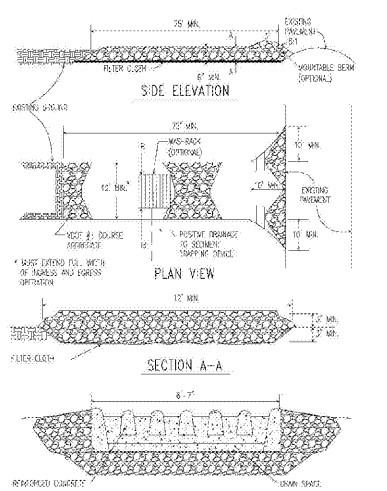

SOURCE: ADAPTED FROM 1983 MARYLAND STANDARDS FOR SOIL EROSION AND SEDIMENT CONTROL, AND VA. DSWC

NOTE: CONTRACTOR SHALL PROVIDE 25' MINIMUM WIDTH WHEN FEASIBLE.

CONSTRUCTION OF A SILT FENCE (WITH WIRE SUPPORT)
PLATE 3.05-1

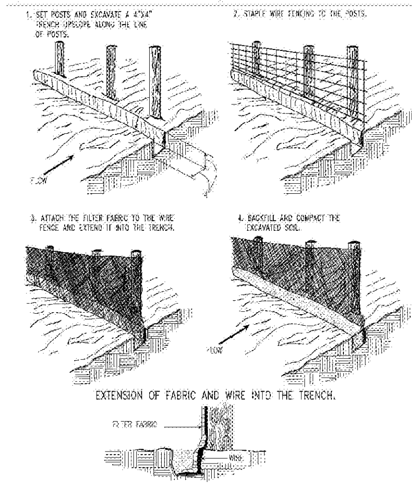

SOURCE: ADAPTED FROM INSTALLATION OF STRAW AND FABRIC FILTER BARRIERS FOR SEDIMENT CONTROL, SHERWOOD & WYANT

SILT FENCE DROP INLET PROTECTION
PLATE 3.07-1

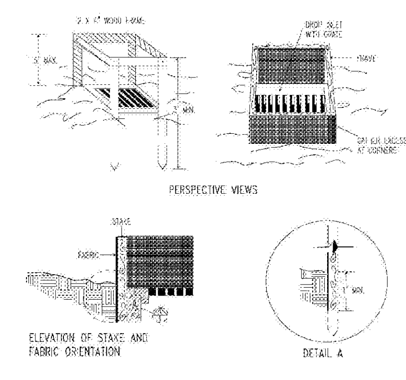

SPECIFIC APPLICATION

THIS METHOD OF INLET PROTECTION IS APPLICABLE WHERE THE INLET DRAINS A RELATIVELY FLAT AREA (SLOPE NO GREATER THAN 5%) WHERE THE INLET SHEET OR OVERLAND FLOWS (NOT EXCEEDING 1 C.F.S.) ARE TYPICAL. THE METHOD SHALL NOT APPLY TO INLETS RECEIVING CONCENTRATED FLOWS, SUCH AS IN STREET OR HIGHWAY MEDIANS.

SOURCE: N.C. EROSION AND SEDIMENT CONTROL PLANNING AND DESIGN MANUAL, 1988

GRAVEL CURB INLET SEDIMENT FILTER
PLATE 3.07-6

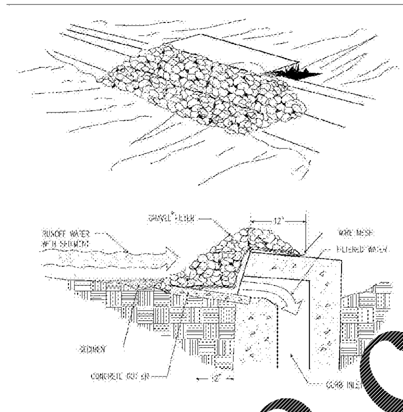

SPECIFIC APPLICATION

THIS METHOD OF INLET PROTECTION IS APPLICABLE AT CURB INLETS WHERE PONDING IN FRONT OF THE STRUCTURE IS NOT LIKELY TO CAUSE INCONVENIENCE OR DAMAGE TO ADJACENT STRUCTURES AND UNPROTECTED AREAS.

* GRAVEL SHALL BE VDOT #3, #357 OR 5 COARSE AGGREGATE.

SOURCE: VA. DSWC

TYPICAL ORIENTATION OF TREATMENT - 1 (SOIL STABILIZATION BLANKET)
PLATE 3.36-1

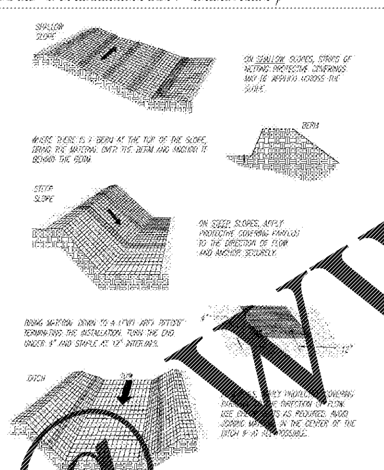

SOURCE: ADAPTED FROM LUDLOW PRODUCTS BROCHURE

FENCING AND ARMORING
PLATE 3.38-2

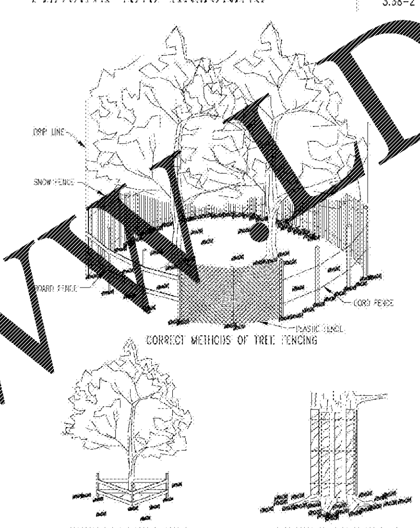

SOURCE: VA. DSWC

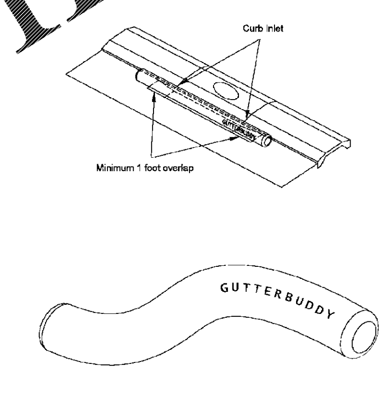

GUTTERBUDDY® Curb Inlet Drain Filters

PROJECT:		
CITY:		DR. BY:
STATE:	DATE:	DR. NO:

TEMPORARY DIVERSION DIKE

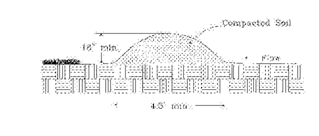

SOURCE: VA. DSWC — PLATE 3.09-1

1992 — 3.32

TABLE 3.32-D
SITE SPECIFIC SEEDING MIXTURES FOR PIEDMONT AREA

	Total Lbs. Per Acre
Minimum Care Lawn	
- Commercial or Residential	175-200 lbs.
- Kentucky 31 or Turf-Type Tall Fescue	95-100%
- Improved Perennial Ryegrass	0-5%
- Kentucky Bluegrass	0-5%
High-Maintenance Lawn	200-250 lbs.
- Kentucky 31 or Turf-Type Tall Fescue	100%
General Slope (3:1 or less)	
- Kentucky 31 Fescue	128 lbs.
- Red Top Grass	2 lbs.
- Seasonal Nurse Crop *	20 lbs.
	150 lbs.
Low-Maintenance Slope (Steeper than 3:1)	
- Kentucky 31 Fescue	108 lbs.
- Red Top Grass	2 lbs.
- Seasonal Nurse Crop *	20 lbs.
- Crownvetch **	20 lbs.
	150 lbs.

* Use seasonal nurse crop in accordance with seeding dates as stated below:

February 16th through April	Annual Rye
May 1st through August 15th	Foxtail Millet
August 16th through October	Annual Rye
November through February 15th	Winter Rye

** Substitute Sericea lespedeza for Crownvetch east of Farmville, Va. (May through September use hulled Sericea, all other periods, use unhulled Sericea). If Flatpea is used in lieu of Crownvetch, increase rate to 30 lbs./acre. All legume seed must be properly inoculated. Weeping Lovegrass may be added to any slope or low-maintenance mix during warmer seeding periods; add 10-20 lbs./acre in mixes.

III - 303

1992 — 3.32

TABLE 3.32-E
QUALITY OF SEED*

	Minimum Seed Purity (%)	Minimum Germination (%)
Legumes		
Crownvetch	98	65**
Lespedeza, Korean	97	85**
Lespedeza, Sericea	98	85**
Grasses		
Bluegrass, Kentucky	97	85
Fescue, Tall (Improved, Turf-Type Cultivars)	98	85
Fescue, Tall (Ky-31)	97	85
Fescue, Red	98	85
Redtop	94	80
Reed Canarygrass	98	80
Perennial Ryegrass	98	90
Weeping Lovegrass	98	87
Annuals		
Annual Ryegrass	97	90
German Millet	98	85
Oats	98	80
Cereal Rye	98	85

* Seed containing prohibited or restricted noxious weeds should not be accepted. Seed should not contain in excess of 0.5% weed seed. To calculate percent pure, live seed, multiply germination times purity and divide by 100.

Example: Ky-31 Tall Fescue with a germination of 85 percent and a purity of 97 percent.

97 x 85 = 8245. 8245 ÷ 100 = 82.45 percent pure live seed.

** Includes "hard seed"

III - 311

1992 — 3.33

TABLE 3.33-A
TYPE OF SOD AVAILABLE IN VIRGINIA AND RECOMMENDED USES

Kentucky Bluegrass: Adapted to the Northern Piedmont and Mountain Regions. Individual varieties selected must make up not less than 10%, nor more than 35% of the total mixture on a weight basis. All varieties must be certified. Selections can be made from Category I alone or various combinations of Categories I, II and III, as noted.

Category I - Recommended Kentucky Bluegrass Varieties

65% - 100% A-34, Abbey, Aspen, Asset, Baron, Blacksburg, Bristol, Cheri, Chateau, Classic, Coventry, Georgetown, Glade, Haga, Julia, Liberty, Loft's 1757, Merit, Midnight, Monopoly, Plush, Princeton 104, Rugby, Suffolk, Victa

Category II - Special use varieties. If used, must contain at least 65% Category I varieties

Shade Tolerant

10-35% Bristol, Columbia, Georgetown, Glade, Midnight

Low-Maintenance Tolerant

10-35% Columbia, Georgetown, Monopoly, Ram I, Touchdown, Victa

Category III - Promising Kentucky Bluegrass Limited performance data and seed availability

10-35% Dawn, Estate, Freedom, Kelly

(continued)

1992 — 3.33

TABLE 3.33-A (CONTINUED)
TYPE OF SOD AVAILABLE IN VIRGINIA AND RECOMMENDED USES

Tall Fescue: Adapted to the entire state.

Recommended Tall Fescue Varieties:

90-100% Amigo, Apache, Bonanza, Chieftain, Finelawn 5GL, Mesa, Rebel II, Shenandoah, Tribute

Promising Tall Fescues:

Certified Arriba, Austin, Avanti, Aztec, Cochise, Crossfire, Eldorado, Hubbard 87, Jaguar II, Maverick II, Monarch, Olympic II, Phoenix, Safari, Shortstop, Sundance, Taurus, Thoroughbred, Titan, Tradition, Vegas, Winchester, Wrangler

0-10% Kentucky bluegrass: Baron, Cheri, Columbia, Monopoly, Nassau, Ram I, Victa

Bermudagrass: Tifway is adapted to the Richmond-Danville-Newport News triangle. Midiron may be used east of Roanoke and south of Charlottesville. Tifgreen and Tifway may be used to the east and south of Richmond. Vamont may be used east of Roanoke and at lower elevations in southwestern Virginia.

Certified Midiron, Tifgreen*, Tifway, Tifway II, Tufcote and Vamont

Zoysiagrass: This sod performs best in southeastern Virginia.

Meyer, Emerald*

Note: Common Bermudagrass is not recommended for sod production.

* Only recommended in southeastern Virginia.

Source: 1991 Virginia Turfgrass Variety Recommendations, Virginia Crop Improvement Association

1992 — 3.35

TABLE 3.35-A
ORGANIC MULCH MATERIALS AND APPLICATION RATES

MULCHES:	RATES: Per Acre	RATES: Per 1000 sq. ft.	NOTES:
Straw or Hay	1½ - 2 tons (Minimum 2 tons for winter cover)	70 - 90 lbs.	Free from weeds and coarse matter. Must be anchored. Spread with mulch blower or by hand.
Fiber Mulch	Minimum 1500 lbs.	35 lbs.	Do not use as mulch for winter cover or during hot, dry periods.* Apply as slurry.
Corn Stalks	4 - 6 tons	185 - 275 lbs.	Cut or shredded in 4-6" lengths. Air-dried. Do not use in fine turf areas. Apply with mulch blower or by hand.
Wood Chips	4 - 6 tons	185 - 275 lbs.	Free of coarse matter. Air-dried. Treat with 12 lbs nitrogen per ton. Do not use in fine turf areas. Apply with mulch blower, chip handler, or by hand.
Bark Chips or Shredded Bark	50 - 70 cu. yds.	1-2 cu. yds.	Free of coarse matter. Air-dried. Do not use in fine turf areas. Apply with mulch blower, chip handler, or by hand.

* When fiber mulch is the only available mulch during periods when straw should be used, apply at a minimum rate of 2000 lbs./ac. or 45 lbs./1000 sq. ft.

Source: Va. DSWC

1992 — 3.13

TEMPORARY SEDIMENT TRAP

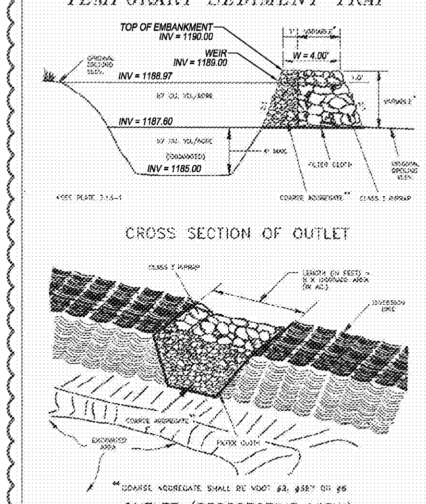

Source: Va. DSWC — Plate 3.13-2

BOHLER ENGINEERING

JOB NO. V183205
CALCULATED BY: JQR DATE: 10/12/18

O'Reilly - Rocky Mount - Sediment Trap

Elevation	Area (ft²)	Inc. Storage (ft³)	Total Storage (ft³)
85	320	---	0
86	470	395	395
87	720	595	990
88	950	835	1795
89	1290	1140	2935
90	1615	1452	4387

Max Drainage Area to Sediment Trap = 0.80 Acres

Req. Dry Storage 67 yd³/Ac = 53.6 yd³ = 1448 ft³

Req. Wet Storage 67 yd³/Ac = 53.6 yd³ = 1448 ft³

Req. Total V = 1448 + 1448 = 2896 ft³

Wet Storage Elevation = 87.6 ft (Interpolated from Stage-Storage Chart)

Dry Storage Elevation = 88.97 ft

Top of Embankment = 90 ft

MINIMUM WET STORAGE DIMENSIONS (LxWxH) = 41' x 21' x 2'

MINIMUM DRY STORAGE DIMENSIONS (LxWxH) = 49' x 29' x 2'

KNOW WHAT'S BELOW
ALWAYS CALL 811
BEFORE YOU DIG
It's fast. It's free. It's the law.

COMMONWEALTH OF VIRGINIA
JONATHAN RITCHIE
Lic. No. 052544
4/4/19
PROFESSIONAL ENGINEER

CRAIG A. SCHNEIDER, AIA
ARCHITECT
1736 East Sunshine, Suite 417
Springfield, Missouri 65804
417.862.0558
Fax: 417.862.3265
e-mail: architect@csterlyschneider.com

PROJECT:
NEW O'REILLY AUTO PARTS STORE
OLD FRANKLIN TURNPIKE
ROCKY MOUNT, VA
EROSION CONTROL DETAILS

O'Reilly AUTO PARTS
CORPORATE OFFICES
233 SOUTH PATTERSON
SPRINGFIELD, MISSOURI 65802
(417) 862-2674 TELEPHONE

COMM #	4252
DATE:	11-2-18
REVISION DATE:	2-22-19
	4-4-19

BOHLER ENGINEERING
28 BLACKWELL PARK LANE, SUITE 201 WARRENTON, VA 20186
PHONE: (540) 349-4500 FAX: (540) 349-0321

PROJECT No.: V183205	SCALE: AS NOTED
DRAWN BY / CHECKED BY: DSH/JQR	CAD I.D.: SD1

C3.3