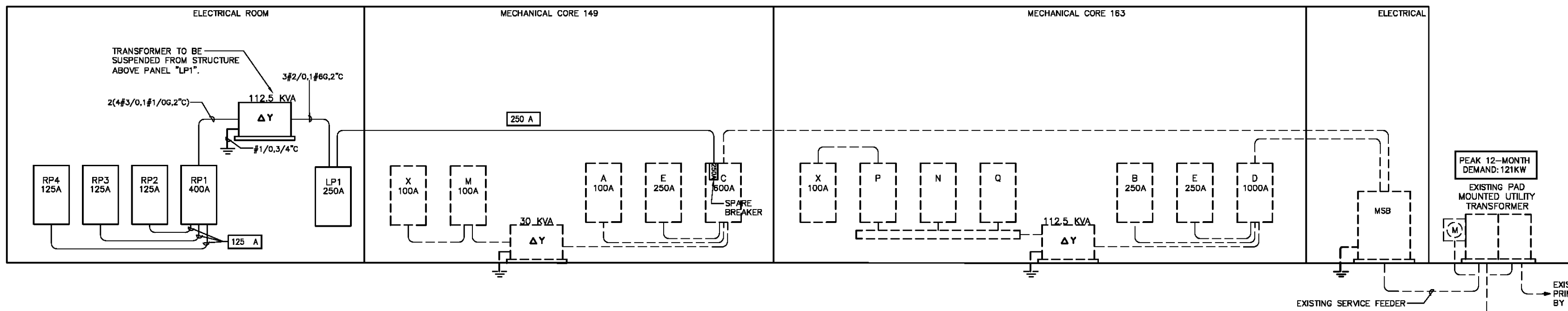

1 EXISTING POWER RISER DIAGRAM

NO SCALE

GENERAL NOTES:

1. ALL DASHED ITEMS ARE EXISTING TO REMAIN, UNLESS NOTED OTHERWISE.

FEEDER SCHEDULE FOR COPPER CONDUCTORS TO SPECIFIC BREAKER SIZE			
BREAKER SIZE	THREE PHASE (COPPER) WIRE/CONDUIT SIZE	BREAKER SIZE	THREE PHASE (COPPER) WIRE/CONDUIT SIZE
20 A	4#12,1#12 G 3/4"C	150 A	4#1/0,1#6 G, 2"C.
25 A	4#10,1#10G 3/4"C	175 A	4#2/0,1#6 G, 2"C
30 A	4#10,1#10 G 3/4"C	200 A	4#3/0,1#6 G, 2-1/2"C
35 A	4#8,1#10 G 3/4"C	225 A	4#4/0,1#4G,2-1/2"C.
40 A	4#8,1#10 G 3/4"C	250 A	4-250KCMIL,1#4G,2-1/2"C.
45 A	4#6,1#10 G 1"C	300 A	4-350KCMIL,1#4G,3"C.
50 A	4#6,1#10 G 1"C	350 A	4-500KCMIL,1#4G,3-1/2"C.
60 A	4#4,1#10 G 1-1/4"C	400 A	(2) 4#3/0,1#3G,2"C.
70 A	4#4,1#8 G 1-1/4"C	400 A*	(2) 4#3/0,2"C.
80 A	4#3,1#8 G 1-1/4"C		
90 A	4#2,1#8 G 1-1/4"C.		
100 A	4#1,1#8 G 1-1/2"C.		
110 A	4#1,1#6 G 1-1/2"C.		
125 A	4#1,1#6 G 1-1/2"C.		

CONDUCTOR LENGTH TABLE

THE ELECTRICAL CONTRACTOR IS RESPONSIBLE FOR MEETING ALL NEC VOLTAGE DROP REQUIREMENTS REGARDLESS OF WHAT THE PANEL SCHEDULE INDICATES. BRANCH CIRCUIT (COPPER CONDUCTORS) ARE TO BE SIZED TO ALLOW A MAXIMUM OF 3% VOLTAGE DROP FROM THE CIRCUIT BREAKER TO THE FIRST DEVICE ON THE BRANCH CIRCUIT AND ACHIEVE A MAXIMUM OF 5% VOLTAGE DROP ACROSS THE ENTIRE BRANCH CIRCUIT: SEE BELOW FOR THIS PROJECTS COMMONLY USED BRANCH CIRCUIT TYPES.

DISTANCE	AMPS	VOLTAGE	BRANCH CIRCUIT
0 - 60FT	20	120V 1-PHASE	#12
60 - 100FT	20	120V 1-PHASE	#10
100 - 160FT	20	120V 1-PHASE	#8
160 - 260FT	20	120V 1-PHASE	#6
260 - 400FT	20	120V 1-PHASE	#4
400 - 700FT	20	120V 1-PHASE	#2
0 - 100FT	20	208V 1-PHASE	#12
100 - 180FT	20	208V 1-PHASE	#10
180 - 280FT	20	208V 1-PHASE	#8
280 - 440FT	20	208V 1-PHASE	#6
440 - 650FT	20	208V 1-PHASE	#4
650 - 831FT	20	208V 1-PHASE	#3
0 - 120FT	20	277V 1-PHASE	#12
120 - 220FT	20	277V 1-PHASE	#10
220 - 350FT	20	277V 1-PHASE	#8
350 - 550FT	20	277V 1-PHASE	#6
550 - 900FT	20	277V 1-PHASE	#4
0 - 200FT	20	480V 1-PHASE	#12
200 - 400FT	20	480V 1-PHASE	#10
400 - 700FT	20	480V 1-PHASE	#8
700 - 1000FT	20	480V 1-PHASE	#6
1000 - 1500FT	20	480V 1-PHASE	#4
1500 - 2000FT	20	480V 1-PHASE	#3
2000 - 2600FT	20	480V 1-PHASE	#2
2600 - 3400FT	20	480V 1-PHASE	#1
0 - 350FT	40	480V 3-PHASE	#8
350 - 580FT	40	480V 3-PHASE	#6
580 - 900FT	40	480V 3-PHASE	#4
0 - 150FT	20	480V 3-PHASE	#12
150 - 300FT	20	480V 3-PHASE	#10
300 - 500FT	20	480V 3-PHASE	#8

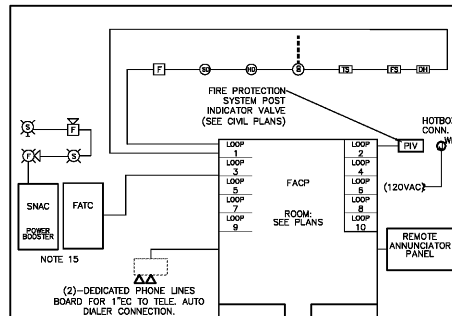

PROVIDE DITEK #DTK-TSS4D SERIES OR EQUAL FOR 120V SUPPLY TO FIRE ALARM CONTROL PANELS. CONNECT DRY CONTACT TO BE MONITORED BY FACP. PROVIDE DITEK DTK-2MHLP24F-WB OR EQUAL FOR ALL LOOPS THAT EXIT THE PHYSICAL BUILDING. TAMPER SWITCHES DTK-2MHLP24B-WB, AND EACH SUB/EXTENDER FIRE ALARM PANEL. NAC, PIV, IDC SURGE: DTK-2MHLP24B-WB OR EQUAL. DIALER SURGE: DTK -2MHTPWB FIBER MEDIA CONVERTER PROTECTOR DTK-PVPIP OR EQUAL.

2 FIRE ALARM RISER DIAGRAM

NO SCALE

FIRE ALARM NOTES

1. FACP SHALL HAVE A MINIMUM 24HR. BATTERY BACKUP.
2. FACP SHALL BE FULLY ANALOG ADDRESSABLE.
3. FACP SHALL BE CONNECTED TO A UL APPROVED CENTRAL STATION.
4. ZONE PER NFPA 72, 2013 AND MANUFACTURER'S RECOMMENDATIONS WITH NO ONE ZONE EXCEEDING 15,000 S.F. PER FLOOR.
5. COORDINATE QUANTITY AND LOCATIONS OF DEVICES WITH CONTRACT DRAWINGS.
6. LOCATE SMOKE DETECTOR WITHIN 5' OF THE MAGNETIC HOLD OPEN DOORS. (TYPICAL)
7. LOCATE FIRE ALARM PULL STATION WITHIN 5' OF THE EXIT DOOR.
8. LOCATE SMOKE/HEAT DETECTOR WITHIN 5' OF THE FA EQUIPMENT (FACP, FATC).
9. LOCATION OF CEILING MOUNTED SMOKE/HEAT DETECTOR SHALL BE FIELD COORDINATED PRIOR TO ROUGH IN. THE DETECTOR SHALL BE A MINIMUM OF 2' AWAY FROM LIGHT FIXTURE AND A MINIMUM OF 3' AWAY FROM AIR DISTRIBUTION DEVICES.
10. AUTOMATIC DOOR CLOSING SHALL BE ACCOMPLISHED BY THE ACTIVATION OF THE LOCAL SMOKE DETECTORS AT THAT DOOR. SMOKE DETECTOR ACTIVATION SHALL ALERT THE BUILDING FIRE ALARM SYSTEM. THE FIRE ALARM SYSTEM SHALL CAUSE ALL HOLD OPEN DOORS TO CLOSE UPON ALARM ACTIVATION IN THE BUILDING.
11. ACTIVATION OF AN ALARM ZONE SHALL CAUSE ALL AIR HANDLING EQUIPMENT TO SHUT DOWN (ALL DAMPERS, AIR HANDLERS AND EXHAUST FANS MUST STOP).
12. ELECTRICAL CONTRACTOR SHALL COORDINATE EXACT LOCATIONS OF ALL FLOW, PRESSURE, & TAMPER SWITCHES WITH FIRE PROTECTION CONTRACTOR PRIOR TO INSTALLATION.
13. ALL VISUAL DEVICES WITHIN THE SAME AREA SHALL BE SYNCRONIZED. IT SHALL BE A THREE BEAT TEMPORAL PATTERN.
14. ALL FIRE ALARM WIRING SHALL BE IN CONDUIT. CLASS A LOOP SYSTEM.
15. THE FIRE ALARM SYSTEM MANUFACTURER SHALL PROVIDE NOTIFICATION APPLIANCE CIRCUIT (NAC) POWER EXTENDERS AS REQUIRED.
16. THE DUCT SMOKE DETECTORS SHALL COMPLY WITH IFC [illegible].
17. THE CIRCUIT FEEDING THE FIRE ALARM PANEL IS DEDICATED FOR THE FIRE ALARM ONLY.
18. PROVIDE REMOTE LIGHT FOR DUCT SMOKE DETECTOR ON CEILING WHERE UNIT IS ABOVE CEILING.
19. CONTRACTOR SHALL INCLUDE IN BID LABOR AND MATERIAL FOR UP TO (5) DEVICES 100' FROM LOCAL PANEL (IN WALL) AS REQUIRED BY LOCAL AHJ/ENGINEER. SEE SPECS FOR REQUIRED NUMBER OF SPARE PARTS.
20. DUCT DETECTORS SHALL BE VERIFIED WITH THE MECHANICAL DRAWINGS FOR QUANTITY AND LOCATION. TOTAL QUANTITY MINIMUM SHALL BE BASED ON BOTH MECHANICAL SCHEDULES AND MECHANICAL PLAN LOCATIONS AND ELECTRICAL PLANS. WHEN DEVICE QUANTITIES (ELECTRICAL VS. MECHANICAL) ARE IN CONFLICT, PROVIDE THE GREATER QUANTITY OF DETECTORS.
23. CONTRACTOR RESPONSIBLE FOR SHOP DRAWINGS AS REQUIRED BY LOCAL AHJ.
24. VERIFY LOCATION OF REMOTE ANNUNCIATOR WITH FIRE MARSHALL PRIOR TO ROUGH-IN.
25. A SUPERVISED AHU SHUTDOWN "DEFEAT" SWITCH MUST BE PROVIDED IN/ADJACENT TO THE FACP. PROVIDE AN INFORMATIVE ENGRAVED LABEL AT THE FACP ABOUT THIS FUNCTION. THE SWITCH MUST CAUSE A SYSTEM "TROUBLE" INDICATION WHEN IT'S PLACED IN THE OFF-NORMAL ("SHUTDOWN DEFEATED") POSITION. THIS IS TO PROVIDE THE OWNER WITH A CONVENIENT MEANS TO TEMPORARILY RESUME HVAC OPERATION IN THE EVENT AN UNWANTED ALARM WILL NOT CLEAR, PRIOR TO ARRIVAL OF THE FIRE ALARM SERVICE TECHNICIAN.
26. ISOLATION MODULES SHALL BE PROVIDED FOR INITIATION DEVICES, WITH AN ISOLATION MODULE IN THE LOOP FOR EVERY 20 DEVICES MAX. LOOP ISOLATION MODULES FOR FACP SHALL BE MOUNTED IN NEMA 1 ENCLOSURE, DIRECTLY ADJACENT.
27. ACCEPTANCE TESTING SHALL BE PROVIDED PER NFPA 72 REQUIREMENTS.

FIRE ALARM SYSTEM MATRIX

Columns: 1 ACTIVATE COMMON ALARM SIGNAL INDICATOR; 2 ACTIVATE AUDIBLE ALARM SIGNAL; 3 ACTIVATE COMMON SUPERVISORY SIGNAL INDICATOR; 4 ACTIVATE AUDIBLE SUPERVISORY SIGNAL INDICATOR; 5 ACTIVATE COMMON TROUBLE SIGNAL INDICATOR; 6 ACTIVATE AUDIBLE TROUBLE SIGNAL; 7 ACTIVATE GENERAL EVACUATION SIGNAL; 8 ACTIVATE EXTERNAL HORNS/STROBES; 9 DISPLAY CHANGE OF STATUS; 10 TRANSMIT FIRE ALARM SIGNAL TO CENTRAL STATION; 11 TRANSMIT SUPERVISORY SIGNAL TO CENTRAL STATION; 12 TRANSMIT TROUBLE SIGNAL TO CENTRAL STATION. BUILDING SYSTEM OUTPUTS: 13 RETURN ELEVATOR TO ALTERNATE FLOOR; 14 RETURN ELEVATOR TO FIRST FLOOR; 15 SHUNT TRIP AFTER ELEV. REACHES DESIGNATED FLOOR; 16 SHUT DOWN RESPECTIVE HVAC; 17 RELEASE DOOR HOLDERS (LOCAL DETECTOR ONLY); 18 SMOKE/FIRE DAMPERS (LOCAL DETECTOR ONLY). CENTRAL COMM: 19 SHOW CHANGE OF STATUS ON ANNUNCIATOR; 20 SHOW CHANGE OF STATUS ON CENTRAL PANEL; 21 TRANSMIT FIRE ALARM SIGNAL TO CENTRAL STATION; 22 TRANSMIT SUPERVISORY SIGNAL TO CENTRAL STATION; 23 TRANSMIT TROUBLE SIGNAL TO CENTRAL STATION.

	1	2	3	4	5	6	7	8	9	10	11	12	13	14	15	16	17	18	19	20	21	22	23
MANUAL FIRE ALARM PULL BOXES	X	X					X	X	X	X									X	X	X		
BUILDING SMOKE DETECTOR	X	X					X	X	X	X							X	X	X	X	X		
DUCT SMOKE DETECTOR			X	X				X			X					X			X	X		X	
SPRINKLER WATER FLOW	X	X					X	X	X	X									X	X	X		
SPRINKLER TAMPER			X	X				X			X								X	X		X	
NOTIFICATION DEVICE SHORT CIRCUIT					X	X		X				X							X	X			
OPEN CIRCUIT					X	X		X				X							X	X			X
GROUND FAULT					X	X		X				X							X	X			X
FIRE ALARM A.C. POWER FAILURE					X	X		X				X							X	X			X
FIRE ALARM SYSTEM LOW BATTERY					X			X				X							X	X			X

HEAT PUMP SCHEDULE (AIR COOLED)

SYMBOL	NOMINAL TONNAGE	COMPRESSOR		FAN	ELECTRICAL DATA			
		LRA	RLA	FLA	MCA	FUSE	VOLTAGE	DISCONNECT
HP-1	1½	9	56	0.7	12	20	208V-1ø	30/F20-2P-3R
HP-2	1½	9	56	0.7	12	20	208V-1ø	30/F20-2P-3R
HP-3	1½	9	56	0.7	12	20	208V-1ø	30/F20-2P-3R
HP-4	1½	9	56	0.7	12	20	208V-1ø	30/F20-2P-3R

ELECTRIC WATER HEATER SCHEDULE

SYM.	DESCRIPTION	ELECTRICAL DATA				
		KW	VOLTS	PHASE	HERTZ	DISCONNECT
WH1	ELECTRIC WATER HEATER	1.5	120	1	60	30/F20-1P-1R
WH2	ELECTRIC WATER HEATER	8.3	208	1	60	60/F60-2P-1R
WH3	ELECTRIC WATER HEATER	8.3	208	1	60	60/F60-2P-1R

HVAC SCHEDULE NOTES:

1. A NEUTRAL CONDUCTOR SHALL BE PROVIDED FOR ALL EQUIPMENT RATED FOR 120V.
2. PROVIDE CURRENT LIMITING FUSES FOR ALL MECHANICAL EQUIPMENT. COORDINATE WITH MECHANICAL.
3. ALL 3ø MECHANICAL EQUIPMENT SHALL BE 10KAIC RATED. COORDINATE WITH MECHANICAL.

LOAD TABULATION

LOADS IN KVA	EXISTING DEMAND SINGLE PHASE	EXISTING DEMAND THREE PHASE	NEW CONNECTED SINGLE PHASE	NEW CONNECTED THREE PHASE	DIVERSITY FACTOR (%)	NEW DEMAND SINGLE PHASE	NEW DEMAND THREE PHASE	TOTAL KVA EXISTING AND NEW DEMAND
LIGHTS			2.5		125	14.2		14.2
VENTILATION				33.4	100	0.0	33.4	33.4
MOTORS			19.2		100	19.2	0.0	19.2
KITCHEN					65	0.0	0.0	0.0
RECEPTACLES			79.2		NEC	44.6		44.6
WATER HEATER			18.1		125	22.6		22.6
MISC.					100	0.0		0.0
EXISTING 1 YEAR PEAK	80	42			125	100.0	53.0	
TOTAL						200.6	86.4	287.0

INDOOR UNIT SCHEDULE

SYMBOL	NOMINAL TONNAGE	ELECTRIC HEAT				FAN MOTOR	ELECTRICAL DATA			
		KW	STAGES	AMPS	VOLTAGE	FLA	MCA	MOP	VOLTAGE	DISCONNECT
IDU-1	1½	–	–	–	–	1.4	2	15	208V-1ø	30/F15-2P
IDU-2	1½	–	–	–	–	1.4	2	15	208V-1ø	30/F15-2P
IDU-3	1½	5.7	1	–	208V-1ø	1.4	12	20	208V-1ø	30/F20-2P
IDU-4	1½	–	–	–	–	1.4	2	15	208V-1ø	30/F15-2P

ROOFTOP UNIT SCHEDULE - (DX COOLING - WITH GAS HEAT)

SYMBOL	NOMINAL TONNAGE	COMPRESSOR (EA)			OFM		IFM	COND. FAN	POWER EXHAUST		POWER SUPPLY			
		NO.	RLA	LRA	QTY.	FLA	FLA	[illegible]	[illegible]	LRA	MCA	MOCP	VOLTAGE	DISCONNECT
RTU-L25	3	1	5.8	45.0	1	[illegible]	[illegible]	[illegible]	--	--	10.1	15	460V-3ø	30/F15-3P-3R
RTU-L26	7½	2	SEE NOTE "A"		1	[illegible]6	3.[illegible]	1	3.3*	6.5*	18.5	20	460V-3ø	30/F20-3P-3R
RTU-L27	4	1	6.2	[illegible]	1	[illegible]5	2.[illegible]	[illegible]	--	--	11.5	15	460V-3ø	30/F15-3P-3R

* PROVIDE SEPARATE POWER CONNECTION FOR RTU-L26 POWER EXHAUST. PROVIDE 30/F[illegible]-3P-3R DISCONNECT. REFER TO PLANS AND PANEL SCHEDULES.

DUCTLESS SPLIT SYSTEMS

INDOOR UNIT					OUTDOOR UNIT						
SYMBOL	ROOM NO.	ELECTRICAL DATA MCA	FUSE	VOLTAGE	SYMBOL	LOCATION	COMPRESSOR RLA	ELECTRICAL DATA MCA	FUSE	VOLTAGE	DISCONNECT
A/C-1	IT ROOM	*	*	208V-1ø	ODU-1	ROOF	6.8	15.5	20	208V-1ø	30/F20-2P
A/C-2	ELEC ROOM	*	*	208V-1ø	ODU-2	ROOF	6.8	15.5	20	208V-1ø	30/F20-2P

* INDOOR UNIT POWER IS FED FROM OUTDOOR UNIT. ELECTRICAL CONTRACTOR SHALL PROVIDE POWER WIRING TO OUTDOOR UNIT AND EXTEND POWER FROM OUTDOOR UNIT TO INDOOR UNIT. COORDINATE FINAL LOCATIONS WITH ELECTRICAL CONTRACTOR.

FAN SCHEDULE

SYMBOL	LOCATION	TYPE	ELECTRICAL DATA			
			WATTS	H.P.	VOLTAGE	DISCONNECT
F-1	ROOF	EXHAUST	–	1/4	120V-1ø	30/F15-1P

Order Plans @ WWW.LDIILine.com

adwarchitects
environmentsforlife
architecture planning interiors
6 coliseum centre,
2815 coliseum drive, suite 500
charlotte, north carolina 28217
t] 704 379 1919
f] 704 379 1920
www.adwarchitects.com

optima engineering
1927 South Tryon St., Suite 300, Charlotte NC 28203
150 Fayetteville St., Suite 520, Raleigh, NC 27601
Phone: 704-338-1292 • www.optimaengineering.com

RICHMOND COMMUNITY COLLEGE

SCO #16-15889-02A

RICHMOND COMMUNITY COLLEGE

LEE BUILDING
STUDENT SERVICES &
CAREER CENTER
VOL.2

BID DOCUMENTS

POWER RISER DIAGRAM

DATE 4-5-2019
PROJECT NO 16063

REVISIONS
NO DATE DESCRIPTION:

THIS DRAWING IS THE PROPERTY OF ADW ARCHITECTS, PA. AND SHALL NOT BE REPRODUCED OR COPIED IN WHOLE OR IN PART. IT SHALL NOT BE USED ON ANY OTHER PROJECT OR GIVEN TO ANY OTHER COMPANY OR AGENCY WITHOUT THE CONSENT OF ADW ARCHITECTS, PA.

NORTH CAROLINA PROFESSIONAL ENGINEER SEAL 15457 KEITH G. PEHL 04/05/19

SEAL

SHEET NUMBER
6 OF 16
OPTIMA #: 17-0017

E006

THIS DRAWING IS AN INSTRUMENT OF SERVICE. THE DRAWING AND THE INFORMATION THEREON IS THE PROPERTY OF OPTIMA ENGINEERING, P.A. ANY REPRODUCTION, ALTERATION, OR USE FOR OTHER THAN THE INTENDED PROJECT, WITHOUT THE WRITTEN CONSENT OF OPTIMA ENGINEERING, P.A. IS EXPRESSLY FORBIDDEN. COPYRIGHT © OPTIMA ENGINEERING P.A. 2018, ALL RIGHTS RESERVED.